Protected by copyright. Copyright by Volkswagen AG. Volkswagen AG does not guarantee or accept any liability with respect to the correctness of information in this document. Copyright by Volkswagen AG. Protected by copyright. Reproduction, distribution, transmission, publication, public performance, adaptation, modification, translation, storage, processing or use for commercial purposes, in part or in whole, is not permitted unless authorised by Volkswagen AG.

Workshop Manual

Lupo 3L 1999 ➤ , Lupo 1999 ➤ ,
Polo 2002 ➤ , Polo 1995 ➤ ,
Polo Classic 1996 ➤ ,
Polo Variant 1998 ➤ , Golf 2004 ➤ ,
Golf 1998 ➤ , Golf 1992 ➤ ,
Golf GTI 2005 ➤ , Golf Plus 2005 ➤ ,
Golf Variant 1998 ➤ ,
Golf Variant 1992 ➤ ,
Golf Cabrio 1998 ➤ , Golf Cabrio 1994 ➤ ,
Vento 1992 ➤ , Bora 1999 ➤ ,
Bora Variant 1999 ➤ ,
New Beetle 1999 ➤ ,
New Beetle Cabrio 2003 ➤ ,
New Beetle RSI 2001 ➤ , Touran 2003 ➤ ,
Passat 2006 ➤ , Passat 1997 ➤ ,
Passat 1994 ➤ , Phaeton 2003 ➤ ,
Sharan 1996 ➤ , Touareg 2003 ➤

Wheels and Tyres Guide

Edition 06.2005

satelettronica

List of Workshop Manual Repair Groups

Repair Group

00 - Technical data

44 - Wheels, tyres, vehicle geometry

Protected by copyright. Copying for private or commercial purposes, in part or in whole, is not permitted unless authorised by Volkswagen AG. Volkswagen AG does not guarantee or accept any liability with respect to the correctness of information in this document. Copyright by Volkswagen AG.

satelettronica

Technical information should always be available to the foremen and mechanics, because their careful and constant adherence to the instructions is essential to ensure vehicle road-worthiness and safety. In addition, the normal basic safety precautions for working on motor vehicles must, as a matter of course, be observed.

All rights reserved.
No reproduction without prior agreement from publisher.

Copyright © 2015 Volkswagen AG, Wolfsburg

D3E8049715C

Contents

00 - Technical data 1

1 **General notes on wheels and tyres (passenger cars)** 1
1.1 Legal conditions for changing wheel and tyre combinations 2
1.2 Technical conditions for changing wheel and tyre combinations 2
1.3 Official type designations 3
1.4 General 5

2 **Facts about wheels and tyres (passenger cars)** 10
2.1 Tyre wear and mileage 10
2.2 Tyre noise 17
2.3 Vibration caused by wheels and tyres 20
2.4 Vehicle pulls to one side 28
2.5 Tyre damage 32
2.6 Facts about wheels and tyres 39

44 - Wheels, tyres, vehicle geometry 53

1 **Lupo 3L, Lupo FSI, Lupo GTI from model year 1999** 53
1.1 Lupo 3L, Type 6E from model year 1999 through model year 2006 53
1.2 Wheel allocation for Lupo 3L, Type 6E from model year 1999 through model year 2006 . . 54
1.3 Lupo FSI, type 6E from model year 2001 through model year 2006 55
1.4 Wheel allocation for Lupo FSI, type 6E from model year 2001 through model year 2006 . . 56
1.5 Lupo GTI, type 6ES from model year 2001 through model year 2006 58
1.6 Wheel allocation for Lupo GTI, type 6ES from model year 2001 through model year 2006 59

2 **Lupo from model year 1999 through model year 2005** 61
2.1 Lupo, type 6X from model year 1999 through model year 2005 61
2.2 Wheel allocation for Lupo, type 6X from model year 1999 through model year 2005 63

3 **Fox model year 2006** 69
3.1 Fox, type 5Z model year 2006 69
3.2 Wheel allocation Fox, type 5Z model year 2006 70

4 **Polo model year 1995 through model year 2002** 74
4.1 Polo, type 6N through 07.95 74
4.2 Wheel allocation for Polo, type 6N through 07.95 75
4.3 Polo, type 6N from 08.95 through model year 1996 76
4.4 Polo, type 6N from model year 1997 through model year 1999 77
4.5 Wheel allocation Polo, type 6N from 08.95 through model year 1999 79
4.6 Polo, type 6N from model year 2000 through model year 2002 83
4.7 Wheel assignment Polo, type 6N from model year 2000 through model year 2002 85

5 **Polo from model year 2002** 90
5.1 Polo, type 9N from model year 2002 through model year 2006 90
5.2 Wheel allocation for Polo, type 9N from model year 2002 through model year 2006 92

6 **Polo Fun from model year 2004** 99
6.1 Polo Fun, type 9N from model year 2002 through model year 2006 99
6.2 Wheel allocation for Polo Fun, type 9N from model year 2004 through model year 2006 . . 100

7 **Polo Classic model year 1996 through model year 2002** 102
7.1 Polo Classic, type 6KV model year 1996 through model year 2002 102
7.2 Wheel allocation for Polo Classic, type 6KV model year 1996 through model year 2002 . . 104

8 **Polo Estate model year 1998 through model year 2002** 108
8.1 Polo Estate Type 6KV from model year 1998 through model year 2002 108
8.2 Wheel allocation for Polo Estate Type 6KV from model year 1998 through model year 2002 110

9 **Polo saloon from model year 2004 through model year 2005** 114
9.1 Polo saloon, type 9N model year from model year 2004 through model year 2005 114

satelettronica

9.2 Wheel allocation for Polo saloon, type 9N model year from model year 2004 through model year 2005 . . . 116
10 Golf model year 1992 through model year 1998 . . . 121
10.1 Golf type 1HX0, Golf Syncro 1HX1, Golf type 1H . . . 121
10.2 Wheel allocation for Golf type 1HX0, Golf Syncro 1HX1, Golf type 1H . . . 125
11 Golf model year 1998 through model year 2004, Golf R32, Golf Anniversary GTI . . . 135
11.1 Golf, Golf 4Motion, type 1J from model year 1998 through model year 2004 . . . 135
11.2 Wheel allocation for Golf, Golf 4Motion, type 1J from model year 1998 through model year 2004 . . . 138
11.3 Conditions for fitting 17" wheels and tyres to Golf model year 1998 through model year 2004 . . . 150
11.4 Golf R32, type 1J model year 2003 through model year 2005 . . . 151
11.5 Wheel allocation for Golf R32, type 1J model year 2003 through model year 2005 . . . 152
11.6 Golf Anniversary GTI, type 1J model year 2002 . . . 153
11.7 Wheel allocation for Golf Anniversary GTI, type 1J model year 2002 . . . 153
11.8 Conditions for fitting 17" and 18" wheels and tyres of Golf Anniversary GTI . . . 158
12 Golf from model year 2004 . . . 159
12.1 Golf, Golf 4Motion, type 1K from model year 2004 through model year 2006 . . . 159
12.2 Wheel allocation for Golf, Golf 4Motion, type 1K from model year 2004 through model year 2006 . . . 161
12.3 Golf GTI, type 1K model year 2005 through model year 2006 . . . 167
12.4 Wheel allocation for Golf GTI, type 1K model year 2005 through model year 2006 . . . 168
13 Golf Plus from model year 2005 . . . 174
13.1 Golf Plus, type 1KP model year 2005 through model year 2006 . . . 174
13.2 Wheel allocation for Golf Plus, type 1KP model year 2005 through model year 2006 . . . 176
14 Golf Estate model year 1994 through model year 1998 . . . 183
14.1 Golf Estate type 1HX0, Golf Estate Syncro type 1HX1, Golf Estate type 1H . . . 183
14.2 Wheel allocation for Golf Estate type 1HX0, Golf Estate Syncro type 1HX1, Golf Estate type 1H . . . 186
15 Golf Estate from model year 1999 through model year 2006, Bora Estate from model year 1999 through model year 2005 . . . 194
15.1 Golf Estate, Golf Estate 4Motion, Bora Estate, Bora Estate 4Motion, type 1J . . . 194
15.2 Wheel allocation for Golf Estate, Golf Estate 4Motion, Bora Estate, Bora Estate 4Motion, type 1J . . . 197
15.3 Conditions for fitting 17" wheels and tyres . . . 208
16 Golf Cabriolet, from model year 1994 through model year 1997 . . . 209
16.1 Golf Cabriolet, type 1EX0, from model year 1994 through model year 1997 . . . 209
16.2 Wheel allocation for Golf Cabriolet, type 1EX0, from model year 1994 through model year 1997 . . . 210
17 Golf Cabriolet, from model year 1998 through model year 2002 . . . 214
17.1 Golf Cabriolet; type 1E from model year 1998 through model year 2002 . . . 214
17.2 Wheel allocation for Golf Cabriolet; type 1E from model year 1998 through model year 2002 . . . 215
18 Vento from model year 1992 through model year 1998 . . . 220
18.1 Vento; type 1HX0, 1H . . . 220
18.2 Wheel allocation forVento; type 1HX0, 1H . . . 222
19 Bora from model year 1999 through model year 2005 . . . 232
19.1 Bora, Bora 4Motion, type 1J from model year 1999 through model year 2005 . . . 232
19.2 Wheel allocation for Bora, Bora 4Motion, type 1J from model year 1999 through model year 2005 . . . 235
19.3 Conditions for fitting 17" wheels and tyres . . . 245
20 Jetta from model year 2006 . . . 247
20.1 Jetta, type 1KM from model year 2006 . . . 247
20.2 Wheel allocation for Jetta, type 1KM from model year 2006 . . . 249
21 New Beetle from model year 1999 . . . 255
21.1 New Beetle, type 9C from model year 1999 through model year 2006 . . . 255

satelettronica

21.2 Wheel allocation for New Beetle, type 9C from model year 1999 through model year 2006 . . . 258
21.3 Conditions for fitting 17" wheels and tyres . . . 268
22 New Beetle Cabriolet from model year 2003 . . . 269
22.1 New Beetle Cabrioet, type 1Y from model year 2003 through model year 2006 . . . 269
22.2 Wheel allocation for New Beetle Cabrioet, type 1Y from model year 2003 through model year 2006 . . . 271
22.3 Conditions for fitting 17" wheels and tyres . . . 280
23 New Beetle RSi . . . 281
23.1 New Beetle RSi, type 9CR from model year 2001 . . . 281
23.2 Wheel allocation for New Beetle RSi, type 9CR from model year 2001 . . . 282
24 Touran from model year 2003 . . . 283
24.1 Touran, type 1T from model year 2003 through model year 2006 . . . 283
24.2 Wheel allocation for Touran, type 1T from model year 2003 through model year 2006 . . . 286
25 Passat from model year 1994 through model year 1997 . . . 290
25.1 Passat, type 35I from model year 1994 through model year 1997 . . . 290
25.2 Wheel allocation for Passat, type 35I from model year 1994 through model year 1997 . . . 292
26 Passat from model year 1997 through model year 2006 . . . 298
26.1 Passat, Passat Estate, type 3B from model year 1997 through model year 2000 . . . 298
26.2 Wheel allocation for Passat, Passat Estate, type 3B from model year 1997 through model year 2000 . . . 300
26.3 Passat, Passat Estate, type 3BG from model year 2001 through model year 2006 . . . 303
26.4 Wheel allocation for Passat, Passat Estate, type 3BG from model year 2001 through model year 2006 . . . 304
26.5 Passat W8 4Motion, type 3BS model year 2002 through model year 2005 . . . 310
26.6 Wheel allocation for Passat W8 4Motion, type 3BS model year 2002 through model year 2005 . . . 311
26.7 Passat Protect, type 3BL model year 2002 through model year 2005 . . . 312
26.8 Wheel allocation, Passat Protect, type 3BL model year 2002 through model year 2005 . . . 313
27 Passat from model year 2006 . . . 315
27.1 Passat, type 3C from model year 2006 . . . 315
27.2 Wheel allocation for Passat, type 3C from model year 2006 . . . 317
28 Phaeton from model year 2003 . . . 323
28.1 Phaeton, type 3D from model year 2003 through model year 2006 - short and long wheelbase . . . 323
28.2 Wheel allocation for Phaeton, type 3D from model year 2003 through model year 2006 - short and long wheelbase . . . 325
29 Sharan from model year 1996 . . . 330
29.1 Sharan, Sharan Syncro, type 7M from model year 1996 through model year 2000 . . . 330
29.2 Wheel allocation for Sharan, Sharan Syncro type M7 model year 1996 through model year 2000 . . . 333
29.3 Sharan, Sharan 4Motion, type 7M model year 2001 . . . 335
29.4 Wheel allocation for Sharan, Sharan 4Motion, type 7M model year 2001 . . . 336
29.5 Sharan, Sharan 4Motion, type 7M from model year 2002 through model year 2006 . . . 340
29.6 Wheel allocation for Sharan, Sharan 4Motion, type 7M from model year 2002 through model year 2006 . . . 342
30 Touareg from model year 2003 . . . 347
30.1 Touareg, type 7L from model year 2003 through model year 2006 . . . 347
30.2 Tyre allocation for Touareg, type 7L from model year 2003 through model year 2006 . . . 350
31 Breakdown set for VW Vehicles . . . 358
32 Temporary spare tyres and wheels for VW vehicles . . . 359
33 Approved makes of summer tyres for initial fitting . . . 361
33.1 Summer tyres for Lupo 3L from model year 1999 . . . 361
33.2 Summer tyres for Lupo FSI from model year 1999 . . . 361
33.3 Summer tyres for Lupo GTI from model year 1999 . . . 361

Volkswagen AG does not guarantee or accept any liability with respect to the correctness of information in this document. Copyright by Volkswagen AG.
Protected by copyright. Copying for private or commercial purposes, in part or in whole, is not permitted unless authorised by Volkswagen AG.
satelettronica

Volkswagen AG. Volkswagen AG does not guarantee or accept any liability with respect to the correctness of information in this document. Copyright by Volkswagen AG. Only for authorised Volkswagen Group workshops.

33.4 Summer tyres for Lupo from model year 1999 through model year 2005 . . . 361
33.5 Summer tyres for Fox from model year 2006 . . . 361
33.6 Summer tyres for Polo from model year 1995 through model year 2002 . . . 362
33.7 Summer tyres for Polo from model year 2002 . . . 363
33.8 Summer tyres for Polo Saloon from model year 2004 . . . 363
33.9 Summer tyres for Polo Fun from model year 2004 . . . 364
33.10 Summer tyres for Polo Classic from model year 1996 through model year 2002 . . . 364
33.11 Summer tyres for Polo Estate from model year 1998 through model year 2002 . . . 365
33.12 Summer tyres for Golf, Vento from model year 1992 through model year 1998 . . . 365
33.13 Summer tyres for Golf Estate from model year 1994 through model year 1998 . . . 366
33.14 Summer tyres for Golf Cabriolet, from model year 1994 through model year 1997 . . . 367
33.15 Summer tyres for Golf, Golf 4Motion from model year 1998 through model year 2004 . . . 367
33.16 Summer tyres for Bora, Bora 4Motion from model year 1999 through model year 2005 . . . 368
33.17 Summer tyres for Golf Estate, Golf Estate 4Motion from model year 1999 through model year 2006, Bora Estate, Bora Estate 4Motion from model year 1999 through model year 2005 . . . 369
33.18 Summer tyres for Golf R32 . . . 370
33.19 Summer tyres for Golf Anniversary GTI . . . 370
33.20 Summer tyres for Golf Cabriolet, from model year 1998 through model year 2002 . . . 370
33.21 Summer tyres for New Beetle from model year 1999 . . . 371
33.22 Summer tyres for New Beetle Cabriolet from model year 2003 . . . 372
33.23 Summer tyres for New Beetle RSi . . . 373
33.24 Summer tyres for Golf from model year 2004 . . . 373
33.25 Summer tyres for Golf GTI from model year 2005 . . . 374
33.26 Summer tyres for Golf Plus from model year 2005 . . . 374
33.27 Summer tyres for Jetta from model year 2006 . . . 375
33.28 Summer tyres for Touran from model year 2003 . . . 375
33.29 Summer tyres for Passat from model year 1994 through model year 1997 . . . 376
33.30 Summer tyres for Passat from model year 1997 through model year 2006 . . . 376
33.31 Summer tyres for Passat W8 . . . 377
33.32 Summer tyres for Passat Protect . . . 377
33.33 Summer tyres for Passat from model year 2006 . . . 378
33.34 Summer tyres for Phaeton from model year 2003 . . . 378
33.35 Summer tyres for Sharan from model year 1996 . . . 378
33.36 Summer tyres for Touareg from model year 2003 . . . 379
34 Approved makes of all-season tyres for initial fitting . . . 380
34.1 All-season tyres for Lupo from model year 1999 through model year 2005 . . . 380
34.2 All-season tyres for Polo from model year 1995 through model year 2002 . . . 380
34.3 All-season tyres from model year 2002 . . . 380
34.4 All-season tyres for Polo Saloon from model year 2004 . . . 380
34.5 All-season tyres for Golf, Vento from model year 1992 through model year 1998 . . . 380
34.6 All-season tyres for Golf Estate from model year 1994 through model year 1998 . . . 381
34.7 All-season tyres for Golf Cabriolet, from model year 1994 through model year 1997 . . . 381
34.8 All-season tyres for Golf, Golf 4Motion from model year 1998 through model year 2004 . . . 381
34.9 All-season tyres for Bora, Bora 4Motion from model year 1999 through model year 2005 . . . 381
34.10 All-season tyres for Golf Estate, Golf Estate 4Motion from model year 1999 through model year 2006, Bora Estate, Bora Estate 4Motion from model year 1999 through model year 2005 . . . 382
34.11 All-season tyres for Golf Cabriolet, from model year 1998 through model year 2002 . . . 382
34.12 All-season tyres for New Beetle from model year 1999 . . . 382
34.13 All-season tyres for New Beetle Cabriolet from model year 2003 . . . 383
34.14 All-season tyres for Golf from model year 2004 . . . 383
34.15 All-season tyres for Golf Plus from model year 2005 . . . 383
34.16 All-season tyres for Jetta from model year 2006 . . . 384
34.17 All-season tyres for Touran from model year 2003 . . . 384
34.18 All-season tyres for Passat from model year 1997 through model year 2006 . . . 384

satelettronica

34.19 All-season tyres for Passat W8 384
34.20 All-season tyres for Passat from model year 2006 384
34.21 All-season tyres for Phaeton from model year 2003 385
34.22 All-season tyres for Touareg from model year 2003 385

35 Approved makes of winter tyres for initial fitting 386
35.1 Winter tyres for Lupo 3L from model year 1999 386
35.2 Winter tyres for Lupo FSI from model year 1999 386
35.3 Winter tyres for Lupo GTI from model year 1999 386
35.4 Winter tyres for Lupo from model year 1999 through model year 2005 386
35.5 Winter tyres for Fox from model year 2006 386
35.6 Winter tyres for Polo model year 1995 through model year 2002 387
35.7 Winter tyres for Polo from model year 2002 387
35.8 Winter tyres for Polo Saloon from model year 2004 387
35.9 Winter tyres for Polo Fun from model year 2004 388
35.10 Winter tyres for Polo Classic model year 1996 through model year 2002 388
35.11 Winter tyres for Polo Estate model year 1998 through model year 2002 388
35.12 Winter tyres for Golf, Vento from model year 1992 through model year 1998 389
35.13 Winter tyres for Golf Estate from model year 1994 through model year 1998 389
35.14 Winter tyres for Golf Cabriolet, from model year 1994 through model year 1997 389
35.15 Winter tyres for Golf, Golf 4Motion from model year 1998 through model year 2004 390
35.16 Winter tyres for Bora, Bora 4Motion from model year 1999 through model year 2005 390
35.17 Winter tyres for Golf Estate, Golf Estate 4Motion from model year 1999 through model year 2006, Bora Estate, Bora Estate 4Motion from model year 1999 through model year 2005 391
35.18 Winter tyres for Golf 32 391
35.19 Winter tyres for Golf Anniversary GTI 391
35.20 Winter tyres for Golf Cabriolet, from model year 1998 through model year 2002 391
35.21 Winter tyres for New Beetle from model year 1999 392
35.22 Winter tyres for New Beetle Cabriolet from model year 2003 392
35.23 Winter tyres for New Beetle RSi 393
35.24 Winter tyres for Golf from model year 2004 393
35.25 Winter tyres for Golf GTI from model year 2005 393
35.26 Winter tyres for Golf Plus from model year 2005 393
35.27 Winter tyres for Jetta from model year 2006 393
35.28 Winter tyres for Touran from model year 2003 394
35.29 Winter tyres for Passat from model year 1994 through model year 1997 394
35.30 Winter tyres for Passat from model year 1997 through model year 2006 394
35.31 Winter tyres for Passat W8 395
35.32 Winter tyres for Passat Protect 395
35.33 Winter tyres for Passat from model year 2006 395
35.34 Winter tyres for Phaeton from model year 2003 395
35.35 Winter tyres for Sharan from model year 1996 396
35.36 Winter tyres for Touareg from model year 2003 396

36 Approved makes of off-road tyres for initial fitting 397
36.1 Off-road tyres for Touareg from model year 2003 397

Protected by copyright. Copying for private or commercial purposes, in part or in whole, is not permitted unless authorised by Volkswagen AG. Volkswagen AG does not guarantee or accept any liability with respect to the correctness of information in this document. Copyright by Volkswagen AG.

satelettronica

Protected by copyright. Copying for private or commercial purposes, in part or in whole, is not permitted unless authorised by Volkswagen AG. Volkswagen AG does not guarantee or accept any liability with respect to the correctness of information in this document. Copyright by Volkswagen AG.

satelettronica

00 – Technical data

1 General notes on wheels and tyres (passenger cars)

This information is intended to help you form an opinion as precise and accurate as possible in cases of tyre damage and other complaints.

In this chapter, you will learn a great deal about tyres, but also about wheels and rims.

Tyres are hi-tech products that are optimally adapted to the operating conditions of modern vehicles.

As with all highly developed technical products, tyres require proper care, maintenance and service. This is essential to ensure safety, performance and comfort for the entire service life of the tyre.

Tyres are constantly being further developed. Quality tyres are the result of modern design methods and production processes, as well as continuous quality checks. All VW approved tyres have been tested by the technical development department and have been designed specifically for each model in collaboration with the tyre manufacturers.

Therefore, we recommend that when renewing tyres, one fit only makes of tyres which have been approved and recommended.

Vehicle safety is the top priority. With regard to the various operating conditions such as

- differing speed ranges,
- winter and summer use and
- wet and dry roads,

the optimal compromise for vehicle safety must be found.

Every tyre is subjected to a wide range of different driving conditions over its entire service life. It is therefore important that the basic requirements for ensuring optimal tyre performance are met.

Proper adjustment of the axle geometry during wheel alignment is an important prerequisite for ensuring the maximum service life of the tyre. Therefore, wheel alignment must always be within the specified tolerance range.

Information for wheel alignment ⇒ Running gear, axles, steering; Rep. gr. 44 .

Note

Tyre damage and related problems can have various causes. It is therefore very important that one determines whether the problem has been caused by the tyre or by other components.

Normal wear and tear on a tyre will alter its characteristics. Tyre noise and vibration could then be the result. These are indications of wear and do not constitute damage in the sense of a tyre defect. You can take measures to eliminate the symptoms at least to some degree. However, in some cases it may not be possible to eliminate tyre noise completely.

satelettronica

1.1 Legal conditions for changing wheel and tyre combinations

The manufacturer is granted general type approval for the whole vehicle including all parts and for specific modifications (general certification according to § 20 StVZO – German Motor Vehicle Construction and Use Regulations – or EC type approval).

The wheels and tyres may be changed only under certain circumstances. The following points must be taken into consideration:

- If the wheel and tyre sizes are listed with information about load index and speed rating in the vehicle papers, these wheel and tyre combinations can be mounted on the vehicle without further action.
- If a general type approval according to § 22 StVZO with § 20 StVZO („parts type approval“) has been granted for the modification without restriction, a copy must be kept in the vehicle. If this modification is entered in the vehicle documents, there is no need to keep the „parts type approval“ in the vehicle.
- If general type approval for the modification has been granted according to § 22 StVZO in conjunction with § 20 StVZO („parts type approval“) with restrictions, then it must be assessed and confirmed by an officially recognised expert or inspector for motor traffic or an inspection engineer from an officially recognised inspection organisation.
- There is no general type approval according to § 22 StVZO for the modifications approved by VOLKSWAGEN AG (see parts certificate, appendix 2).
- If the wheels and/or tyres are not mentioned in the vehicle documents, the vehicle is no longer legal following the modification according to the StVZO.
- Immediately after the modification has been made, it must be assessed and confirmed by an officially recognised expert or inspector for motor traffic or by an inspection engineer from an officially recognised inspection organisation. A form for the parts certificate is included as Appendix 1.
- If there is no entry in the vehicle documents, this confirmation of attachment must be kept in the vehicle and presented for inspection at the request of any authorised person.

The stipulations described above are based on German legal requirements. No claims are made as to their completeness. Other countries may have other legal requirements.

The tables in Appendix 2 of the parts certificate show the wheel and tyre combinations for VW vehicles from model year 1992 approved by VOLKSWAGEN AG and verified by the Test Laboratory for Vehicle Technology at the TÜV NORD STRASSENVERKEHR GMBH (German Technical Inspectorate) and the conditions to be taken into account. The use of Genuine wheel rims on a vehicle to which they have not been allocated is not permitted.

The possible modifications shown here are combinations that meet VOLKSWAGEN AG's requirements for handling and road safety. They are the result of practical tests and VOLKSWAGEN AG recommends them for this reason.

1.2 Technical conditions for changing wheel and tyre combinations

- The wheel and tyre combinations or changes listed in the tables for individual vehicles refer exclusively to Volkswagen Genuine wheels.

satelettronica

- Approval of wheel and tyre combinations or a change to wheels from the accessories trade is not possible with the parts certificate attached here.
- Tubeless radial belted tyres may be used only with stepped rims having a bead retaining contour, e.g. round hump.
- The correct tyre pressures must be observed when the specified wheel and tyre combinations are used. The tyre pressures for summer tyres are shown on the sticker on the inside of the fuel tank cap or in the tables for the specific vehicles.
- Sufficient freedom of movement between the wheels and tyres and the wheel housing, running gear and brake components is ensured if the instructions and conditions laid down in the parts certificate are observed under all operating conditions.
- If not otherwise specified, snow chains may be fitted only to the drive wheels. On most four-wheel drive vehicles, snow chains may be used only on the front wheels, but on the Touareg, also the rear wheels.
- Front and rear wheels and tyres must be the same size. On four-wheel drive vehicles, tyres from the same manufacturer and with the same tread pattern must always be used.

1.3 Official type designations

Passenger cars licensed for road use in Germany need a general type approval for the issue of a vehicle title document.

The type approval is issued by the Federal Ministry for Transport in Flensburg following type inspection. This procedure was permitted through 31.12.1997 and, in exceptional cases, even after that.

Other member states of the European Union (EU) have different procedures for issuing a document similar to the German title document. Through 31.12.1997, each member state was entitled to issue its own national type approvals according to its own procedures.

Since 1.1.1998, all passenger cars licensed within the European Union must have a type approval corresponding to EU guidelines ⇒ page 3 . Vehicles licensed for road use with single-vehicle approval according to § 21 StVZO in Germany are excepted.

This means the same guidelines apply to all vehicle manufacturers. This makes it easier to trade across national borders within the EU.

1.3.1 Official type, sales or trade designation

In the following table, all VW vehicles which already have EU type approval are listed in the column "EU type".

All VW vehicles which were granted type approval according to the procedure valid up to 31.12.97 are listed in the column "General type"

If entries appear in both columns "General type" and "EU type", there exist vehicles of this model which are approved according to both the StVZO and the EU guidelines. In this case, one must first establish what sort of vehicle one has. There are two possibilities:

1st possibility

The last page of the vehicle title includes the field „Certified holder of a general type approval/EEC type approval“. Either the general type approval number of the EU type approval number is entered here, assuming it is the original vehicle title document. This is the

Protected by copyright. Copying for private or commercial purposes, in part or in whole, is not permitted unless authorised by Volkswagen AG. Volkswagen AG does not guarantee or accept any liability with respect to the correctness of information in this document. Copyright by Volkswagen AG.
satelettronica

case only if the vehicle was not deregistered in the past for longer than 12 months.

2nd possibility

Check whether the general type approval number or the EU type approval number is entered on the vehicle identification plate.

Official type designation for vehicles with		Sales or trade designation
General type	**EU type**	
-	6E	Lupo 3L, Lupo FSI
-	6ES	Lupo GTI
-	6X	Lupo 1999 >
-	5Z	Fox 2006 >
6N	6N	Polo 1995 > (A03)
-	6KV	Polo Classic 1996 > (A13); Polo Estate 1998 > (A23)
-	9N	Polo 2002 > (A04)
1HX0	1H	Golf 1992 > (A3)
1HX0	1H	Golf Estate (A3)
1HX0	1H	Vento (A3)
1HX1	1H	Golf Syncro (A3)
1HX1	1H	Golf Syncro Estate (A3)
1EX0	1E	Golf Cabriolet (A3)
-	1J	Golf 1998 >, Golf 4Motion (A4)
-	1J	Golf Estate 1999 >
-	1J	Bora 1999 >, Bora 4Motion
-	1J	Bora Estate 1999 >
-	1K	Golf 2004 >
-	1KM	Jetta 2006 >
-	1KP	Golf Plus 2005 >
-	1T	Touran 2003 >
-	9C	New Beetle 1999 >
-	9CR	New Beetle RSi 2001 >
-	1Y	New Beetle Cabriolet 2003 >
35I	-	Passat 1994 >
35I	-	Passat Estate 1994 >
-	3B	Passat/Passat Estate 1997 >
-	3B	Passat/ Passat Estate 4Motion 1997 >
-	3BG	Passat/Passat Estate 2001 >
-	3BG	Passat/ Passat Estate 4Motion 2001 >
-	3BS	Passat/Passat Estate W8 4Motion 2002 >
-	3BL	Passat Protect 2002 >
-	3C	Passat 2006 >
-	3D0	Phaeton 2003 >
-	7L	Touareg 2003 >
-	7M	Sharan, Sharan Syncro 1996 >

Protected by copyright. Copying for private or commercial purposes, in part or in whole, is not permitted unless authorised by Volkswagen AG. Volkswagen AG does not guarantee or accept any liability with respect to the correctness of information in this document. Copyright by Volkswagen AG.

satelettronica

1.4 General

1.4.1 Special models

Special models are only partly represented in the tables in Appendix 2. Modification of these vehicles depends on the engine capacity of the basic model.

1.4.2 Vehicles with Plus running gear

The Plus running gear differs from the basic running gear in the following components:

- Suspension link
- Swivel joint
- Wheel bearing housing
- Anti-roll bar with coupling rod (not on Passat)
- Drive shaft
- Wheel hub
- Brake disc
- Brake caliper
- Wheel

One of the identifying features of the Plus running gear is the connection between the swivel joint and the wheel bearing housing.

A - Connection between swivel joint and wheel bearing housing on basic running gear

B - Connection between swivel joint and wheel bearing housing on Plus running gear

The 5 wheel bolts on each wheel are the most visible identifying feature. The Passat VR6 through 09.93 is an exception. From 06.91, this vehicle was produced with 5 wheel bolts, but was gradually equipped with the Plus running gear from 02.92.

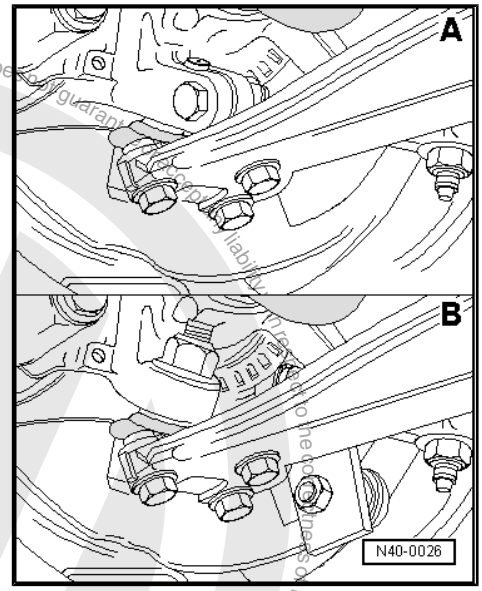

Overview - vehicles with Plus running gear

Model	Model year	Engine
Golf GTI	from 1992	85 kW
Golf GTI 16V	from 1993	110 kW
Golf VR6	from 1992	128 kW
Golf VR6 Syncro	from 1994	140 kW
Vento GT	from 1992	85 kW
Vento VR6	from 1992	128 kW
Passat 16V	from 1994	110 kW
Passat VR6	from 1994	128 kW
Passat VR6 Syncro	from 1994	135 kW

satelettronica

1.4.3 Speed ratings for tyres

The speed rating (e.g. "T") following the size of the tyre (e.g. 185/65 R14 14 „T“) indicates the maximum permitted speed (v_{max}) of the tyre.

The tyres for the vehicle must be selected so that their maximum permitted speed is greater than the maximum speed that the vehicle („based on model“) can attain.

Vehicles with national type approval

If the vehicle has a national type approval, the maximum speed for the vehicle is calculated as follows:

Formula for vehicles with v_{max} up to 150 km/h

v_{max} = 1.03 x v + 3.5 km/h ⇒ page 6

Example: Stated maximum speed v = 145 km/h

v_{max} = 1.03 x 145 km/h + 3.5 km/h = 152.85 km/h

In this example, a tyre with the speed rating „Q“ or higher must be used.

Formula for vehicles with v_{max} above 151 km/h

v_{max} = 1.01 x v +6.5 km/h ⇒ page 6

Example: Stated maximum speed v = 163 km/h

v_{max} = 1.01 x 163 km/h +6.5 km/h = 171.13 km/h

In this example, a tyre with the speed rating „S“ or higher must be used.

Vehicles with EC type approval

If your vehicle has an EC type approval, the maximum speed for all vehicles is calculated as follows:

v_{max} = 1.05 x v ⇒ page 6

Example: Stated maximum speed v = 172 km/h

v_{max} = 1.05 x 172 km/h 180.60 km/h

In this example, a tyre with the speed rating „T“ or higher must be used.

It is permitted to use tyres with a higher speed rating. The same applies to tyres with a higher load index.

Note

For the letter „v“, use the maximum speed given under item 6 (in Germany) of the vehicle title document. This calculation is necessary because all vehicles, for technical reasons, achieve different maximum speeds within a legally permitted tolerance.

1.4.4 „Series 80“ tyres

Tyres of the „80“ series (e.g. 145/80 R 13 74 S) will replace the „82“ series (e.g. 145/82 R 13 74 S). Lawmakers have stipulated that „82“ series tyres may be replaced by „80“ series tyres without having been entered in the vehicle documents.

Protected by copyright. Copying for private or commercial purposes, partially or in whole, is not permitted unless authorised by Volkswagen AG. Volkswagen AG does not guarantee or accept any liability with respect to the correctness of information in this document. Copyright by Volkswagen AG.
satelettronica

The condition for this is that the „80“ series tyres have the same width, be of the same type – cross-ply or radial belted – and have the same or higher load index.

If only „80“ series tyres are entered in the vehicle documents, „82“ series tyres may only be used if an entry has been made in the vehicle documents.

1.4.5 Wheel bolts - torque settings

The following table shows the allocation of wheel bolts and their technical data. The part numbers can be found in the ⇒ Electronic parts catalogue „ETKA“ .

Type of vehicle	Number of wheel bolts or nuts	Dimensions	Torque specification of wheel bolts or nuts
Passenger cars	4	M12 x 1.5 x 23.5	110 Nm
Passenger cars	5	M14 x 1.5 x 27	120 Nm
Sharan through model year 2000	5	M14 x 1.5 x 34	170 Nm
Sharan from model year 2001	5	M14 x 1.5 x 34	170 Nm

1.4.6 Modified wheel bolts for Sharan from model year 2001

Modified wheel bolts were used from model year 2001 and after. These have the same dimensions and torque settings as the previous wheel bolts.

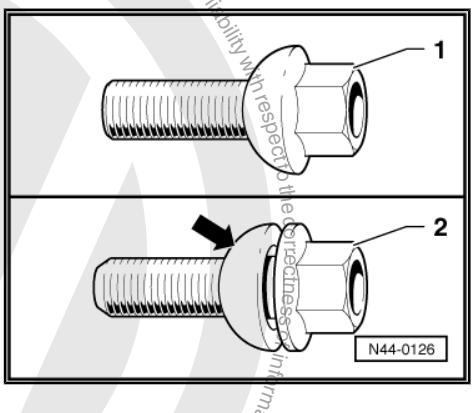

1 - For vehicles through model year 2000

Polished black surface - part no. -701 601 139 B- .

Not permitted on vehicles from model year 2001 or later.

2 - Wheel bolt for vehicles from model year 2001 and later

Collar -arrow- is not permanently attached to the hexagon.

Coated silver-coloured surface - part no. -7M3 601 139 B- .

WARNING

- *The modified wheel bolts are not permitted on vehicles produced through (including) model year 2000.*
- *Wheel rims from vehicles produced through model year 2000 are not permitted on vehicles from model year 2001 or later.*

1.4.7 Wheel rims - pitch circle diameter

Pitch circle diameter	Model		
100 mm	All Golf 1992 >	All Vento 1992 >	
	All Lupo 1999 >	Lupo 3 L, FSI, GTI	
	All Golf 1998 >	All Bora 1998	
	All Polo 1995 >	All Polo 2002 >	
	New Beetle 1999 >	New Beetle RSi 2001 >	New Beetle Cabriolet 2003 >
	All Passat 1994 >	Fox 2006 >	

Protected by copyright. Copyright by Volkswagen AG. Volkswagen AG does not guarantee or accept any liability with respect to the correctness of information in this document. Copyright by Volkswagen AG. Protected by copyright. Copyright by Volkswagen AG. Volkswagen AG does not guarantee or accept any liability with respect to the correctness of information in this document. Copyright by Volkswagen AG. Protected by copyright. Copyright by Volkswagen AG. Volkswagen AG does not guarantee or accept any liability with respect to the correctness of information in this document. Copyright by Volkswagen AG. Protected by copyright. Copyright by Volkswagen AG. Volkswagen AG does not guarantee or accept any liability with respect to the correctness of information in this document. Copyright by Volkswagen AG.
satelettronica

Pitch circle diameter	Model		
112 mm	All Passat 1997 >	Passat W8	Passat Protect
	Phaeton 2003 >	Passat 2006 >	
	All Sharan 1996 >		
	Touran 2003 >	Golf 2004 >	Golf Plus 2005 >
120 mm	Touareg 2003 >		
130 mm	Touareg 2003 >		

1.4.8 Data on wheel rims

There are several items of information on the wheel rims. The following example shows the information needed for unambiguous identification of the wheel rim:

Part number:	6E0 601 027 A
Wheel size:	6 J x 15 6 - Rim width in inches J - Shape of wheel rim flange 15 - Rim diameter in inches
Wheel offset in mm:	43
Data on hump of bead seat:	EH2 Extended Hump [1)]

1) Raised round hump on both bead seats. These ensure that when run-flat tyres are used without air pressure, they will not slip from bead seat. Rims with EH2 are required only if tyres with run-flat capability are fitted!

1.4.9 Split rim composite wheels

Split rim alloy wheels consist of several parts.

The major parts are the rim and the wheel centre. These parts are bolted together with special bolts using a special process. This ensures that the wheel functions properly, that it is sealed and safe and that it runs true. These requirements are not guaranteed with workshop materials and under workshop conditions.

WARNING

You must not dismantle or repair composite wheels!

1.4.10 Alloy wheels with exchangeable trim elements

These wheels are fitted with exchangeable trim elements. Follow these instructions during installation.

satelettronica

– Clean the thread in the wheel before screwing in the new bolts.

– Always use new bolts!

1 - Trim element

2 - Hexagon socket head bolt

Torque specification for self-locking hexagon socket head bolts:
5 Nm

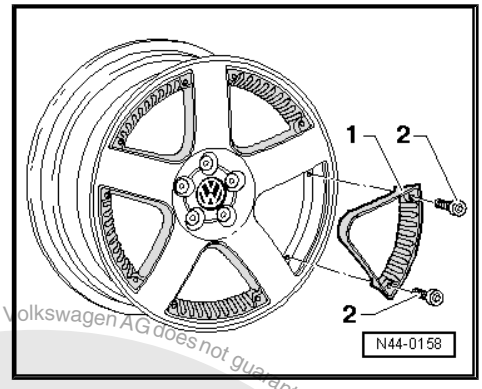

Protected by copyright. Copying for private or commercial purposes, in part or in whole, is not permitted unless authorised by Volkswagen AG. Volkswagen AG does not guarantee or accept any liability with respect to the correctness of information in this document. Copyright by Volkswagen AG.
satelettronica

2 Facts about wheels and tyres (passenger cars)

2.1 Tyre wear and mileage

2.1.1 General

A tyre has to meet numerous requirements ⇒ page 10 .

Different types of tyres meet these requirements to varying degrees.

Depending on the conditions in which the tyres are used and on the type of vehicle, some requirements will be more important than others.

H, V, and Z tyres for „high-performance vehicles" are expected to have good grip on wet and flooded roads. On the other hand, they cannot have such a long mileage expectancy as, for example, tyres with S or T ratings.

2.1.2 Requirements to be met by tyres

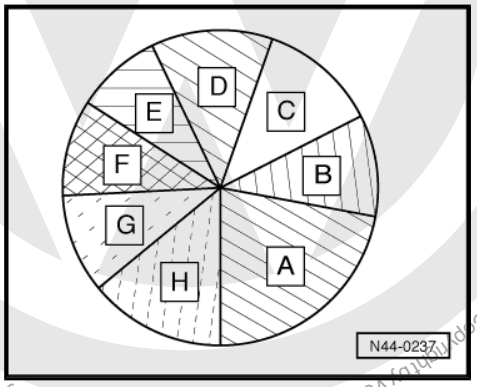

A - Wet braking properties

B - Driving comfort

C - Steering accuracy

D - Driving stability

E - Tyre weight

F - Life expectancy

G - Rolling resistance

H - Aquaplaning

The pie chart illustrates to what extent the tyre meets the various requirements. It shows how the proportions of the requirements A to H can be distributed according to the construction of the tyre and the rubber mixture used.

Improving one of the characteristics will have a negative effect on one of the others.

Example:

An improvement in wet braking properties -A- leads to a reduction in driving comfort -B-, rolling resistance -G- and life expectancy -F-.

The life expectancy of a car tyre depends not only on the rubber composition and design of the tyre. The operating conditions, the type of vehicle and the style of driving also have a significant influence on its mileage performance.

Modern vehicles with the appropriate engine allow a gentle, economical driving style but also an extremely sporty driving style. A tyre life of 5,000 to 40,000 km or more is possible.

Note

The driving style is the most important factor in determining the service life of a tyre.

Protected by copyright. Copying for private or commercial purposes, in part or in whole, is not permitted unless authorised by Volkswagen AG. Volkswagen AG does not guarantee or accept any liability with respect to the correctness of information in this document. Copyright by Volkswagen AG.
satelettronica

2.1.3 Wear behaviour of high-speed tyres

These tyres are designed for use at high speeds. The main objective in the development of this type of tyre is good grip on wet surfaces. The tread compositions do not have the same wear resistance as T and H tyres for lower speeds.

The expected life of high-speed tyres is therefore considerably lower under comparable operating conditions.

2.1.4 Factors influencing the service life of a tyre

The following factors influence a tyre's service life to varying degrees.

Driving style:

- Speed ⇒ page 11
- Braking ⇒ page 11
- Acceleration ⇒ page 12
- Cornering ⇒ page 12

For more information about driving style ⇒ page 11 .

Maintenance:

- Tyre pressure ⇒ page 12

For more information about maintenance ⇒ page 12 .

Environment:

- Road surface
- Ambient temperature and climate

Vehicle:

- Weight
- Dynamic toe and camber settings

Tyre use:

- Speed range
- Wet or dry

Tyre type:

Winter or summer

2.1.5 Driving style

I. Steady driving without deceleration or acceleration

Example:

Speed (km/h)	Wheel slip	Wear
100	1	1
180	3	9

II. Braking (driving style)

Most wear occurs during braking.

Example: Braking from a speed of 50 km/h

Protected by copyright. Copyright by Volkswagen AG. Volkswagen AG does not guarantee or accept any liability with respect to the correctness of information in this document. Copyright by Volkswagen AG. Copying for private or commercial purposes, in part or whole, is not permitted unless authorised by Volkswagen AG.
satelettronica

Braking distance (m)	Deceleration (m/s²)[2]	Wheel slip	Wear
Vehicle coasting to stop		0	0
100	0.1 x g	4	1
50	0.2 x g	8	4
12.5	0.4 x g [3]	32	2000 - 3000

2) g = Freefall acceleration: 9.81 m/s²

3) A deceleration of 0.4 x g corresponds to heavy braking.

III. Acceleration (driving style)

Wheel slip occurring during driving off gently is approximately the same as that occurring during driving at a constant speed of 100 km/h.

Example:

	Wheel slip	Wear
Driving off gently	1 - 2	1
Driving off normally	7 - 8	5
Driving off with wheels spinning	20 or more	100 - 200

IV. Driving through curves (driving style)

A »sporty« driving style and driving at higher speeds in curves also cause greater wear.

In practice, this means that wear is increased 16-fold when the cornering speed is doubled. This is the price that has to be paid for going faster.

Example: Driving through a curve with a radius of 150 m

Speed (km/h)	Lateral acceleration (m/s²)[4]	Wear
50	1 = 0.13 x g	1
80	2.5 = 0.33 x g	6.5
100	4 = 0.53 x g	16

4) g = gravitational acceleration: 9.81 m/s²

2.1.6 Tyre maintenance

Tyre pressure

The vehicle's weight causes the tyre's contact patch to flatten. This causes the tread and the entire bracing plies of the tyre continually to be deformed when a tyre is rolling. Low tyre pressure causes greater deformation, resulting in greater warming and increased rolling resistance. This then leads to increased wear and poses a greater safety risk.

Example: Specified standard tyre pressure with cold tyres, according to vehicle load

Tyre pressure (bar)	Tyre pressure (%)	Tyre life (%)
2.3	100	100
1.9	80	85
1.4	60	60

Copyright by Volkswagen AG. Volkswagen AG does not guarantee or accept any liability with respect to the correctness of information in this document. Copying for private or commercial purposes, in part or in whole, is not permitted unless authorised by Volkswagen AG.
satelettronica

Tyre pressure (bar)	Tyre pressure (%)	Tyre life (%)
1.0	40	25

Excessive tyre pressure will lead to increased wear around the centre of the tyre's tread and to poor rolling comfort. We recommend always to maintain the tyre pressure specified by the manufacturer.

Note

- *The diagrams shown are not applicable in all cases.*
- *They are intended merely to give an idea of the wear rates of tyres on the front and rear axles and with front-wheel drive and four-wheel drive.*
- *The tyre service life may differ significantly, depending on operating conditions and running gear.*

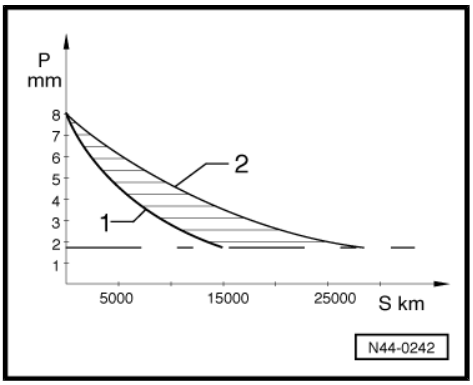

Diagram 1:

Tread depth versus tyre life for vehicles with front-wheel drive and V-rated tyres

P - Tread depth

S - Mileage covered

1 - Front axle

2 - Rear axle

Diagram 2:

Tread depth versus tyre service life for vehicles with four-wheel drive and V-rated tyres

P - Tread depth

S - Mileage covered

1 - Front axle

2 - Rear axle

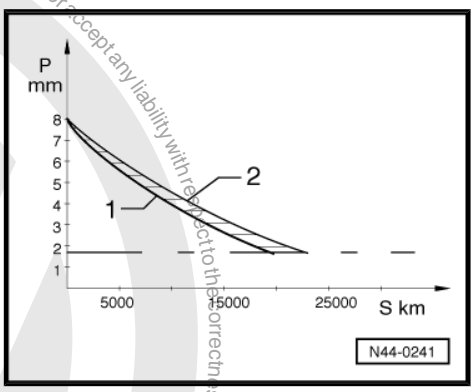

Diagrams 1 and 2 show that the tread on a new tyre wears faster than that on a heavily used tyre. Because the wear curve is not linear, it is not possible to estimate the tyre's expected life on the basis of wear after a distance of 5,000 km.

On front-wheel drive vehicles, the front tyres have to transmit not only the steering and driving forces, but also the greater part of the lateral and braking forces. This causes the front tyres on front-wheel drive vehicles to wear much faster than the rear tyres. Even tyre wear can be achieved by rotating (interchanging) the front and rear tyres on a regular basis. Rotating wheels ⇒ page 46 .

2.1.7 Evenly worn tyres

Demands placed on tyres are becoming ever greater.

This is caused by the following factors:

- greater vehicle weight
- high speeds
- high level of vehicle safety

Protected by copyright. Copying for private or commercial purposes, in part or in whole, is not permitted unless authorised by Volkswagen AG. Volkswagen AG does not guarantee or accept any liability with respect to the correctness of information in this document. Copyright by Volkswagen AG.
satelettronica

A greater load on the tyre will, of course, lead to an increase in tyre wear.

Driving style has a critical effect on tyre wear. Therefore, worn tyres with an evenly worn tread cannot be replaced under warranty.

The effective service life of a tyre can be determined only when the remaining tread depth has reached 2 mm (see diagrams ⇒ page 13).

2.1.8 Measuring tread depth

Note

- *The tread depth is measured in the main tread channels.*
- *Do not measure at the TWIs (Tread Wear Indicators).*

Measure the tread depth in the main tread channel, at the points where the tyre is worn most heavily. The position of the TWIs can be seen at various points on the shoulder of the tyre ⇒ Item 15 (page 40) .

A „Δ“ or the manufacturer's „logo“ may appear in the place of „TWI“.

The bars of the TWI have a height of 1,6 mm. This is the minimum tread depth required by German law.

Different values may apply in other countries.

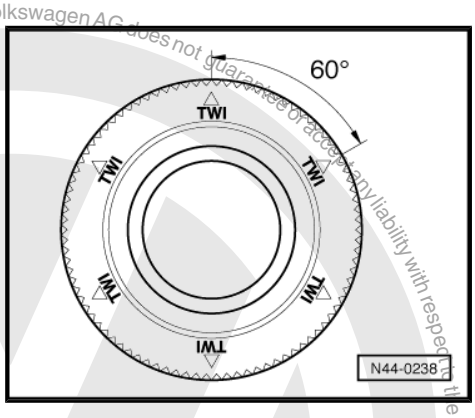

The TWIs must not be included in the measurement. Tread depth should always be measured at the deepest point of the tread channel.

A - TWIs in the main tread channels

B - Main tread channels with TWIs -arrows-

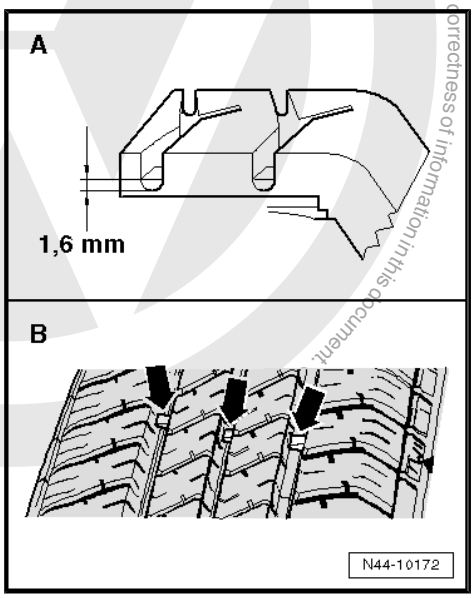

2.1.9 One-sided wear

This is often caused by driving style, but can be the result of incorrect wheel alignment.

Protected by copyright. Copying for private or commercial purposes, in part or in whole, is not permitted unless authorised by Volkswagen AG. Volkswagen AG does not guarantee or accept any liability with respect to the correctness of information in this document.
satelettronica

Increased one-sided wear

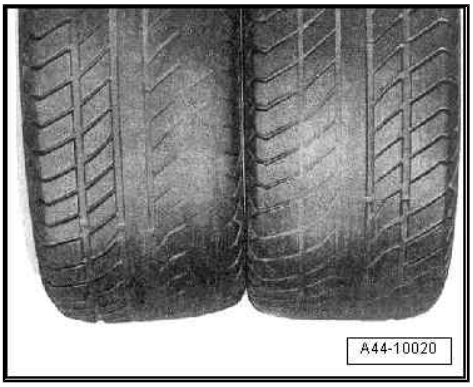

One-sided wear, usually in conjunction with signs of scuffing on the ribs of the tread and in the fine grooves, always occurs when the tyres have been allowed to roll with an extreme tyre slip angle, causing them to »rub« on the road surface.

Driving fast on a stretch of road with lots of curves will cause increased wear, in particular on the outer shoulder.

A rounded outer shoulder on the tyre in conjunction with a particularly high degree of wear on the outer tread blocks indicates fast cornering. This wear pattern is influenced by driving style.

To optimise handling, the suspension is set to certain toe and camber values. Increased one-sided wear can be expected if tyres are allowed to roll under conditions which differ from those specified.

One-sided wear is especially likely if the toe and camber have not been set correctly. Moreover, there is a greater risk of diagonal washout.

Toe-out or negative toe-in

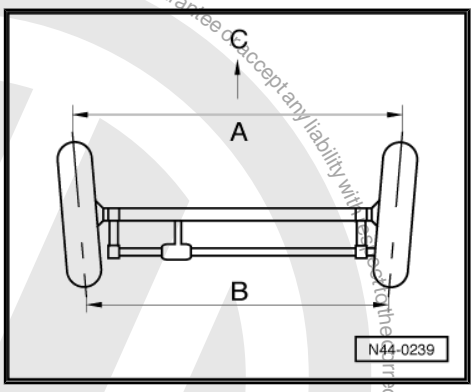

Distance between the front edges of the wheels -A- is greater than distance between the rear edges of the wheels -B- (-C- = direction of travel).

Toe-in or positive toe

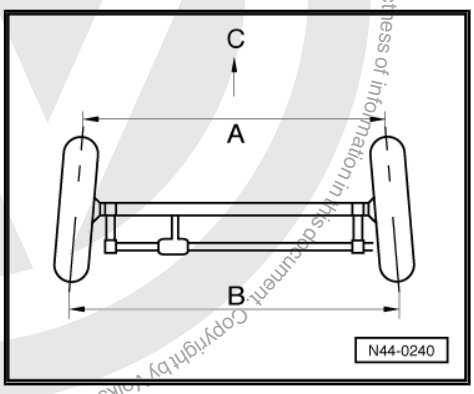

Distance between the front edges of the wheels -A- is less than distance between the rear edges of the wheels -B- (-C- = direction of travel).

To prevent one-sided wear, care must be taken to ensure that the wheel is set within the tolerance specified by the vehicle manufacturer. The most frequent deviation of the wheel alignment is caused by external influences, for example hard contact with the kerbstone when parking.

By measuring the axle geometry, you can check whether the wheel alignment is within the specified tolerances or whether it has to be corrected.

Running gear modifications

Using „suspension-lowering kits“ and/or alloy wheels that have not been approved by VW may result in altered wheel positions which deviate from the specified alignment.

Even if the axle geometry is correct with the vehicle stationary during wheel alignment, the changed vehicle height and wheel positions can cause the wheel suspension to move differently during operation.

Uneven wear is then unavoidable.

2.1.10 Wear in middle of tyre

This wear pattern is found on the driven wheels of high-performance vehicles that are frequently driven long distances at high speeds.

Protected by copyright. Copying for private or commercial purposes, in part or in whole, is not permitted unless authorised by Volkswagen AG. Volkswagen AG does not guarantee or accept any liability with respect to the correctness of information in this document. Copyright by Volkswagen AG.
satelettronica

At high speeds, centrifugal forces cause the tyre diameter to increase more in the middle of the tread than it does at the shoulder. This causes drive forces to be transferred to the road surface from the centre section of the tread. This is reflected in the wear pattern.

Effects of this kind can be especially pronounced on wide tyres.

It is not possible to counter this wear pattern by reducing the tyre pressure.

> ⚠ WARNING
>
> ***For reasons of safety, the tyre pressure must not under any circumstances be reduced below the specified tyre pressure.***

A more or less even tread wear pattern can be achieved by rotating the tyres between the driven wheels and non-driven wheels in good time.

Increased tread wear

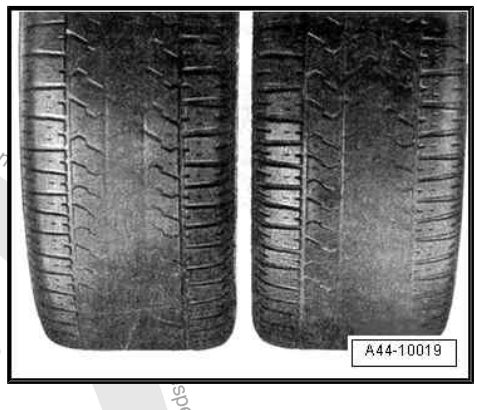

The typical tread wear pattern of tyres run on the driven wheels of a high-performance vehicle.

The increased wear in the centre section of the tread results from the extra load associated with centrifugal forces within the tyre and the transmission of drive forces.

Protected by copyright. Copying for private or commercial purposes, in part or in whole, is not permitted unless authorised by Volkswagen AG. Volkswagen AG does not guarantee or accept any liability with respect to the correctness of information in this document. Copyright by Volkswagen AG.
satelettronica

2.1.11 Diagonal washout

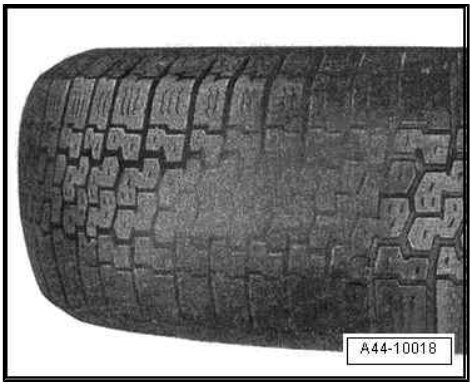

Diagonal washout on a tyre

Diagonal washout runs at an angle of approx. 45° to the circumference.

It usually occurs at one point only, but can also occur at several points around the circumference of the tyre.

Washout occurs almost exclusively on the tyres on the non-driven wheels, in particular at the rear left. Washout occurs very often on some models, while it poses no problem at all on other models. The effect is intensified by high toe-in values. Toe-in values in the region of the lower tolerance limits of the specified alignment values improve the wear pattern.

The most pronounced diagonal washout is often found in the area where the tyre components are joined.

Wheels with toe-in also roll with a tyre slip angle when the vehicle is driven in a straight line. This leads to diagonal strain in the contact area between the tyres and road surface.

This wear pattern is intensified when tyre pressure is too low. To avoid such tread wear patterns, the toe-in values of the two rear wheels should be identical and the specified tyre pressures observed.

If washout is detected at an early stage, the wheels should be fitted on the drive axle. Deeper washout cannot be repaired.

Faulty adjustment

If a customer complains of „diagonal wear spots“, the toe adjustment must be examined. If toe-in is correct, the cause of the diagonal washout is very probably the tyre itself.

Tyres with diagonal washout caused by incorrect wheel alignment are not covered by warranty.

2.2 Tyre noise

2.2.1 General notes on tyre noise

Tyre noise that can be heard by the human ear is caused by vibrations which are transmitted by the air from the source of the sound to our ears.

Of interest here are the noises caused by certain characteristics and effects of the rolling tyre (source of the sound).

The cause of the noise is largely dependent on the combination of the road surface and tyres.

The structure and material of the road surface will greatly affect tyre noise. For example, the noise level on a wet road is much higher than on a dry road.

The pattern of the tyre tread also has a significant influence on tyre noise. Tyres with transverse grooves at an angle of 90° generate more noise than tyres with grooves running diagonally.

Small tread blocks are unstable. Their highly pronounced deformation agitates the air as the tyres roll. This creates vibrations in the air which cause tyre noise.

Wider tyres are louder. They need more tread channels to displace water. When the tyres roll, these tread channels displace the air, also creating vibrations in the air.

Further effects that also influence tyre noise:

Protected by copyright. Copying for private or commercial purposes, in part or in whole, is not permitted unless authorised by Volkswagen AG. Volkswagen AG does not guarantee or accept any liability with respect to the correctness of information in this document. Copyright by Volkswagen AG.
satelettronica

- „Tyre vibration“ is the principal cause of tyre noise. It is caused by the columns of air in the tread channels being agitated.
- „Air pumping“ is the compression and expansion of the air caused by the deformation of the tread blocks as the tyre contact patch moves along the road surface.

Useful information regarding tyre noise

Tyre noise is determined primarily by the tyres and the road surface.

The roughness, structure and material of the road surface influence tyre noise.

The widths of the tyre and the rim, among other things, influence tyre noise. Due to their larger contact area, wider tyres will cause more tyre noise than narrow tyres, as more air has to be displaced and more „mass“ is agitated to create vibrations.

A wider wheel rim will also cause a tyre to have a wider contact patch. The effect on tyre noise is thus very similar to that of a wider tyre. Moreover, the damping characteristics of the tyre may also be adversely affected by the wider wheel rim.

Tyre noise of a vehicle with front-wheel drive is more perceptible in the rear because wind and the engine noise are not as loud there.

2.2.2 Saw-tooth wear

Saw-tooth wear is a stepped wear pattern on the individual tread blocks ⇒ page 19 that can cause increased tyre noise. The saw tooth is caused by uneven deformation of the tread blocks in the tyre's contact patch. Saw-tooth wear is more pronounced on non-driven wheels than on driven wheels.

Protected by copyright. Copying for private or commercial purposes, in part or in whole, is not permitted unless authorised by Volkswagen AG. Volkswagen AG does not guarantee or accept any liability with respect to the correctness of information in this document. Copyright by Volkswagen AG.
satelettronica

New tyres are more susceptible to saw-tooth wear because of the greater elasticity of the high tread blocks. As the tread depth decreases, the tread blocks become more rigid and the tendency to wear in a saw-tooth pattern decreases.

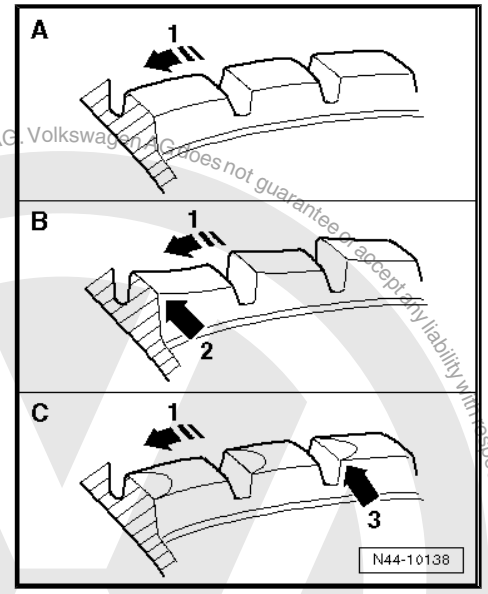

Appearance of saw tooth

A - Tread block of a new tyre; seen in direction of rotation -arrow 1-; tread blocks are equally high in front and back.

B - Development of saw teeth; seen in the direction of rotation -arrow 1-, tread blocks are higher in front than in back -arrow 2-.

C - Seen in the direction of rotation -arrow 1-, tread blocks show greater wear in the front section of the „saw tooth“ -arrow 3-.

Pronounced saw-tooth wear can lead to customers complaining about tyre noise.

Pronounced saw-tooth wear occurs under the following conditions:

- toe-in values are too high
- tyre pressures are incorrect
- tread is coarse and open
- tyres are fitted on the non-driven axle
- very fast cornering

non-directional tyres

In the event of saw-tooth wear, the direction of rotation of the tyre must be reversed. If saw-tooth wear is especially pronounced and tyre noise has increased, interchange the tyres diagonally. This will reduce the saw-tooth effect.

On front-wheel-drive vehicles, this effect is intensified by the greater wear on the front axle.

Tyre noise will be somewhat louder immediately after the tyres have been interchanged but will return to a normal level after about 500...1,000 km have been driven.

Directional tyres

In the event of increased saw-tooth wear on the rear tyres – in particular on front-wheel drive vehicles – interchange the front and rear tyres. In the event of increased saw-tooth wear on the outer edges of the tyres on one axle, turn both tyres around on their rims. The left-hand wheel must then be fitted on the right side of the vehicle and the right-hand wheel on the left side.

2.2.3 Flat spots (from locking wheels)

Flat spots result from hard braking which causes the wheels to lock so that the rubber is worn off at the contact patch between the tread and the road surface.

As the tyres slide over the road surface, friction generates heat, which reduces the tread material's resistance to wear.

Not even the most wear-resistant tread compound can prevent the flat spots caused by extreme braking.

Even ABS-controlled brake systems cannot prevent brief locking of the wheels, and thus, minor flat spots.

The degree of such wear depends largely on the vehicle speed, the road surface and the load placed on the wheel. The following examples should make this clear.

Protected by copyright. Copyright by Volkswagen AG. Volkswagen AG does not guarantee or accept any liability with respect to the correctness of information in this document. Copyright by Volkswagen AG.
satelettronica

If a vehicle is braked to a standstill on a dry surface with the wheels locked, the amount of rubber worn from the tyre will cover an area the size of a postcard and will have a thickness of:

- ♦ up to 2.0 mm from a speed of 57 km/h (23.8 m braking distance)
- ♦ up to 3.3 mm from a speed of 75 km/h (41.8 m braking distance)
- ♦ up to 4.8 mm from a speed of 92 km/h (71.6 m braking distance)

Flat spots in tread

Tyres with such damage must no longer be used and must be renewed.

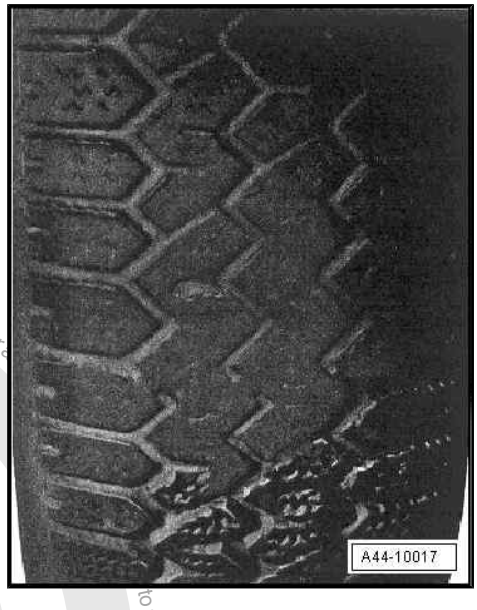

2.3 Vibration caused by wheels and tyres

2.3.1 Causes of vibration

There are numerous causes for vibration. Vibration can be caused by tyre wear, among other things. Tyre wear caused by driving is not always uniform across the entire tread of the tyre. This causes slight imbalances which affect the smooth running of a wheel which was previously exactly balanced.

Minor imbalances will not be felt at the steering wheel, but that does not mean that they are not there. They increase wear on the tyre, thus reducing the tyre's service life.

Recommendation

To ensure

- optimal safety,
- smoothest possible running and
- even wear

throughout a tyre's service life, we recommend having the wheels and tyres balanced at least twice during the tyre's service life.

2.3.2 Balancing wheels

Before you start balancing the wheels, the following requirements must be met.

- The tyre pressure must be correct.
- The tyre tread must not show one-sided wear and should be at least 4 mm deep.

Protected by copyright. Copyright by Volkswagen AG.
Reproduction, in whole or in part, for commercial purposes, in part or in whole, is not permitted unless authorised by Volkswagen AG. Volkswagen AG does not guarantee or assume any liability with respect to the correctness of information in this document. Copyright by Volkswagen AG.
satelettronica

- The tyre must not show any signs of damage, for example cuts, piercing, foreign bodies, etc.
- The wheel suspension, steering and steering linkage, including the shock absorbers, must be in perfect condition.
- You must have conducted a road test.

2.3.3 Conducting a road test before balancing wheels

If a customer brings a vehicle to the workshop complaining about „vibration“, a road test is essential prior to balancing the wheels.

♦ This will give you information about the nature of the vibration.

♦ You will be able to determine in which speed range the vibration occurs.

– Raise the vehicle on a lifting platform immediately after the road test.

– Mark the positions of the tyres on the vehicle.

Tyre position	Marked with ...
Front left tyre	FL
Front right tyre	FR
Rear left tyre	RL
Rear right tyre	RR

– Remove wheels from vehicle.

– Balance wheels.

2.3.4 Balancing wheels on stationary wheel balancing machine

Clamp wheel into wheel balancing machine

Note

When balancing tyres, remember that cleanliness is absolutely essential, as indeed it is in the case of any other repair work you carry out. Only then can you attain a flawless result!

Dirt and rust in the area of the contact surfaces and centre of the wheel distort the result.

– Clean the contact surfaces, the centre of the wheel and the recess on the inside of the wheel before mounting the wheel on the wheel balancer.

– Mount the wheel with tyre on the wheel balancer.

Protected by copyright. Copyright by Volkswagen AG. Volkswagen AG does not guarantee or accept any liability with respect to the correctness of information in this document. Copyright by Volkswagen AG.
Commercial purposes, in part or in whole, is not permitted unless authorised by Volkswagen AG.
satelettronica

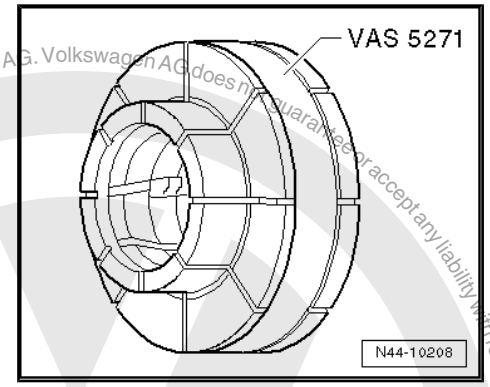

Note

- *To clamp the wheel, use e.g. centring system for wheel balancing machines -VAS 5271- .*
- *This ensures that the wheel is 100% centred and that the wheel will be clamped without damage!*
- *The wheel cannot be centred 100% with conical clamping elements on the wheel balancing machine.*
- *A deviation of 0.1 mm from the centre results in an imbalance of 10 grams at the wheel's rim.*

Procedure for balancing wheels and tyres

– Rotate wheel and tyre on wheel balancer.

– Check that the indicator lines on the sidewall of the tyre near the rim flange run evenly.

– Check that the body of the tyre runs evenly while the wheel and tyre are rotating.

Note

If one-sided wear, flat spots from braking or severely washed out spots are apparent, balancing cannot achieve smooth running. In this case, the tyre must be renewed.

– Check the true running of the wheel and tyre. If the wheel and tyre do not run true although there are no flat spots, radial or lateral runout may be the cause.

– Check the wheel for radial or lateral runout ⇒ page 24 .

– If radial and lateral runout are within the specified tolerance, balance the wheel and tyre.

Note

- *More than 60 grams of weight per tyre should not be used.*
- *If more weight is required, you may be able achieve smoother running by match mounting the tyre and rim. Match mounting tyres* *⇒ page 26* *.*
- *The wheel balancer display should indicate 0 grams.*
- *As an alternative to match mounting, you could use the vibration control system -VAS 6230-* *⇒ page 23* *.*

– Bolt the wheel to the vehicle.

– First hand-tighten the lowest wheel bolt to about 30 Nm.

– Then tighten the remaining wheel bolts diagonally to about 30 Nm. This process centres the wheel on the hub.

– Lower vehicle onto its wheels.

– Now use a torque wrench to tighten the wheel bolts diagonally to the specified torque.

Perform road test.

– After balancing the wheels and tyres, perform a road test.

Protected by copyright. Copying for private or commercial purposes, in part or in whole, is not permitted unless authorised by Volkswagen AG. Volkswagen AG does not guarantee or accept any liability with respect to the correctness of information in this document. Copyright by Volkswagen AG.
satelettronica

If you detect vibration during the road test, it may be due to tolerance in the wheel centring.

In unfavourable circumstances, the component tolerances of wheels and hubs could cumulate. This too can lead to vibration. This can be alleviated using a finish balancer. ⇒ page 23

2.3.5 Vibration control system -VAS 6230-

Using the vibration control system -VAS 6230- you can perform more functions than just stationary balancing.

A special feature of this system is the testing of the radial force of the wheel and tyre while rolling.

A roller presses against the wheel with a force of about 635 kg. This simulates the vertical tyre force against the road surface during travel.

Radial and lateral runout in the wheel and tyre and differences in the stiffness of the tyre cause the vertical force of the wheel to vary.

The -VAS 6230- detects and stores the position of the maximum measured radial force in the tyre. Then the position of the smallest distance between the wheel flange and the centre of the rim is measured.

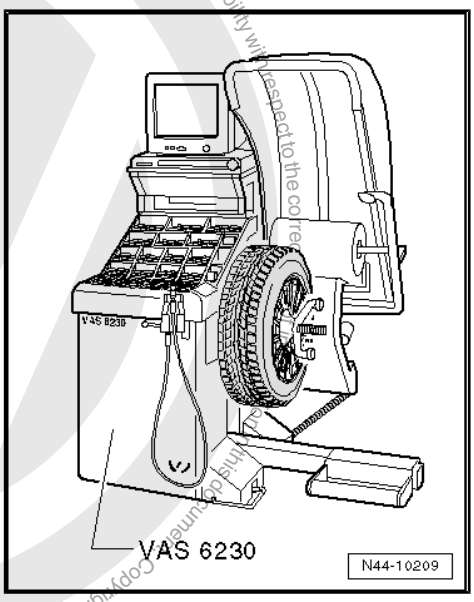

2.3.6 Finish balancer

Note

- *Before working with a finish balancer , the mechanic needs to have been instructed by the manufacturer of the balancer.*
- *To balance the wheels, set the wheels of the driven axle on the sensor platforms (only the front wheels of a front-wheel drive vehicle, all four wheels of a four-wheel drive vehicle).*

If you determine a residual imbalance greater than 20 grams when balancing the wheels, you should rotate the mounting position of the wheel on the hub.

– Mark the point at which the imbalance is indicated.

– Unbolt the wheel and rotate its position on the hub so that the marking points downwards.

Note

The hub must not rotate during this procedure.

– First hand-tighten the lowest wheel bolt to about 30 Nm.

– Then tighten the remaining wheel bolts diagonally to about 30 Nm. This process ensures that the wheel is centred properly on the hub.

– Check whether the imbalance is less than 20 grams using the finish balancer.

Protected by copyright. Copying for private or commercial purposes, in part or in whole, is not permitted unless authorised by Volkswagen AG. Volkswagen AG does not guarantee or accept any liability with respect to the correctness of this document. Copyright by Volkswagen AG.
satelettronica

Note

The imbalance should always be less than 20 grams before you change the balance weight.

– If necessary, remove the wheel bolts again.
– Rotate the wheel relative to the hub once more, turning it one or two wheel bolt holes further.
– Tighten the wheel bolts using the method described above.

Note

Do not try to reduce the imbalance using balance weights until the imbalance is less than 20 grams.

– Balance the wheels until the imbalance is less than 5 grams.
– Tighten wheel bolts to specified torque setting if you have not already done so.

WARNING

Always tighten wheel bolts to specified torque using a torque wrench!

2.3.7 Radial and lateral runout of wheels and tyres

Radial and lateral runout occur when the wheel and tyre do not run absolutely true.

For technical reasons, 100% true running is not possible.

Therefore, the manufacturers of these components allow a precisely determined tolerance.

Mounting the tyre in an unfavourable position on the wheel can cause the maximum allowed tolerance for wheel with tyre to be exceeded.

The table shows the maximum permissible tolerances for a wheel with mounted tyre.

Tolerances for radial and lateral runout of wheels with tyres

Wheel with tyre	Radial runout (mm)	Lateral runout (mm)
Passenger cars	0.9	1.1 (1.3 in vicinity of lettering)

2.3.8 Checking radial and lateral runout on wheels and tyres with tyre gauge -V.A.G 1435-

Checking lateral runout

– Preload tyre gauge about 2 mm.

Protected by copyright. Copying for private or commercial purposes, in part or in whole, is not permitted unless authorised by Volkswagen AG. Volkswagen AG does not guarantee or accept any liability with respect to the correctness of information in this document. Copyright by Volkswagen AG.

satelettronica

– Set tyre gauge against sidewall of tyre.
– Slowly rotate the wheel.
– Note the smallest and the largest dial readings.

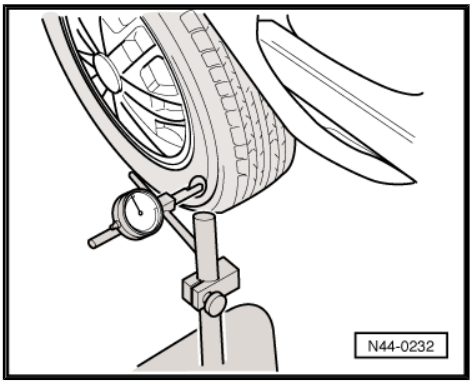

Note

If the difference is greater than 1.3 mm, the lateral runout is too great.

In this case, you can reduce lateral runout by match mounting the tyre ⇒ page 26 .

Extreme values on the tyre gauge due to small irregularities in the rubber may be disregarded.

Checking radial runout

– Preload tyre gauge about 2 mm.
– Set the tyre gauge against the tyre tread.
– Slowly rotate the wheel.
– Note the smallest and the largest dial readings.

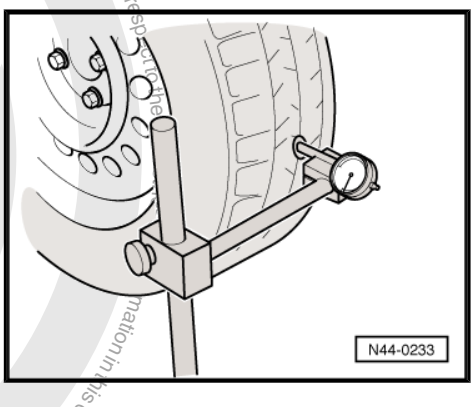

Note

If the difference is greater than 1 mm, the radial runout is too great.

In this case, you can reduce radial runout by match mounting the tyre ⇒ page 26 .

2.3.9 Checking radial and lateral runout on wheel

– Mount the wheel on the wheel balancer .
– Use the wheel balancing machine centring system -VAS 5271- .
– Preload tyre gauge about 2 mm.
– Slowly rotate the wheel.
– Note the smallest and the largest dial readings.

S - Lateral runout

H - Radial runout

– Compare the measured values with the specifications in the table ⇒ page 25 .

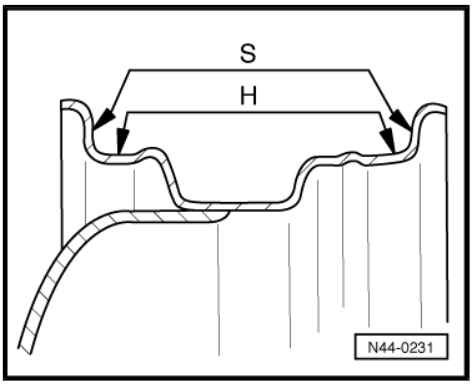

Note

Extreme values on the tyre gauge due to small irregularities may be disregarded.

Specifications for radial and lateral runout on wheel

Wheel		Radial runout (mm)	Lateral runout (mm)
Passenger cars	Steel wheel	0.5	0.5

Protected by copyright. Copyright by Volkswagen AG. Copyright by Volkswagen AG. Volkswagen AG does not guarantee or accept any liability with respect to the correctness of information in this document. Copyright by Volkswagen AG. Protected by copyright. Copyright by Volkswagen AG. Reproduction, in part or whole, is not permitted without the authorisation of Volkswagen AG.
satelettronica

Wheel		Radial runout (mm)	Lateral runout (mm)
	Alloy wheel	0.5	0.8
Sharan	Steel wheel	0.5	0.8
	Alloy wheel	0.5	0.5

Note

If the measured value exceeds the specification, acceptably smooth running cannot be attained.

2.3.10 Match mounting

General

When radial or lateral runout of the wheel and tyre coincide, the imbalance of the wheel is amplified by the tyre.

For technical reasons, 100% true running is not possible ⇒ page 24 .

Before match mounting the used wheels which are fitted on the vehicle, run the tyres warm. This will eliminate any flat spots caused by storage or handling, ⇒ page 27 .

Procedure for match mounting

– Deflate the tyre.
– Press the tyre beads off the rim flanges.
– Coat the tyre bead all round with tyre fitting paste .
– Rotate the tyre 180° relative to the wheel.
– Inflate the tyre to approx. 4 bar.
– Mount the wheel with tyre on the wheel balancer.
– Check true running, that is, radial and lateral runout.

Note

- *If the specified values for radial and lateral runout are not exceeded, the wheel can be balanced to 0 grams. Specified values appear on ⇒ page 24 .*
- *If the radial and lateral runout is not within the specifications, the tyre must be rotated again.*

– Deflate the tyre and press the tyre beads off the rim flanges.
– Rotate the tyre 90° relative to the wheel (1/4 of a turn).
– Inflate the tyre to 4 bar again and check true running.

Note

- *If the specified values for radial and lateral runout are not exceeded, the wheel can be balanced to 0 grams.*
- *If the radial and lateral runout is not within the specifications, the tyre must be rotated again.*

– Press the tyre off the rim flanges again as described above.

Reproduced by permitted unless authorised by Volkswagen AG. Volkswagen AG does not guarantee or accept any liability with respect to the correctness of information in this document. Copyright by Volkswagen AG.
Copyright. Copying for private or commercial purposes, in part or in whole, is not permitted unless authorised by Volkswagen AG.
satelettronica

– Rotate the tyre 180° relative to the wheel (1/2 a turn).

If the radial and/or lateral runout is still not within the specifications, check the radial and/or lateral runout of the wheel: ⇒ page 25 .

If the measured values for radial and lateral runout of the wheel are within the specifications, the tyre has an impermissibly high radial or lateral runout. In this case, the tyre must be renewed.

Note

- *After the tyres have been fitted, there will be fitting paste between the tyres and the rim flanges.*
- *Therefore, severe braking and acceleration manoeuvres must be avoided for the first 100 or 200 km driven. The tyres may otherwise rotate on the rims and your work will have been in vain.*

2.3.11 Flat spots caused by storage or handling

What is a flat spot?

Flat spots caused by storage or handling also cause vibration in the same way as incorrectly balanced wheels do. It is important that flat spots on the tread caused by storage or handling are identified as such.

Flat spots caused by storage or handling cannot be balanced and they can reoccur at any time due to various circumstances. Flat spots caused by storage or handling can be eliminated without complicated special tools. This does not apply to flat spots caused by hard braking ⇒ page 19 .

Note

Flat spots caused by hard braking cannot be repaired. Such tyres must be renewed.

Reasons for flat spots caused by storage or handling:

- The vehicle has been left standing in one place without being moved for several weeks.
- The tyre inflation pressure is too low.
- The vehicle was placed in a paint shop drying booth after being painted.
- The vehicle was parked with warm tyres in a cool garage or similar for a long period of time. In this case, a flat spot from standing may even occur overnight.

Eliminating flat spots caused by storage or handling

- Flat spots caused by storage or handling cannot be eliminated from the tyre using workshop equipment.
- Flat spots caused by storage or handling can be removed only by running the tyres warm.
- The method described below is not recommended in cold and wintry weather.

Requirements and conditions:

– Check and, if necessary, correct inflation pressures.

– Drive the car on a motorway where possible.

Protected by copyright. Copyright by Volkswagen AG. Volkswagen AG does not guarantee or accept any liability with respect to the correctness of information in this document. Copyright by Volkswagen AG. Reproduction, in part or whole, is permitted unless specifically prohibited.

satelettronica

– Traffic and road conditions permitting, drive a 20 to 30 km stretch at a speed of 120 to 150 km/h.

WARNING

- *Do not endanger yourself or other road users during this road test.*
- *Observe the highway code and speed limitations in force when performing the road test.*

– Raise the vehicle immediately following the road test.
– Remove the wheels from the vehicle.
– Balance the wheels on a stationary wheel balancer ⇒ page 21 .

2.4 Vehicle pulls to one side

2.4.1 General

Perform a road test to determine whether a vehicle is pulling to one side and if so, which side. If the vehicle pulls to one side ⇒ page 29 .

When wheel alignment is checked, include the wheel alignment test results in tyre complaint report.

Manufacturer's tolerances can lead to a slight amount of taper (asymmetry) in the tyre carcass. The rolling tyre then develops a lateral force which acts directly on the wheel suspension, leading to self-steering of the vehicle. Strategic rotation of the wheels can compensate for this self-steering behaviour.

2.4.2 Conicity

Conicity is caused by a slight offset of the tread and/or the belt (amounting to a few tenths of a millimetre) relative to the geometric centre of the tyre. Conicity is not visible and cannot be measured with equipment available in the workshop.

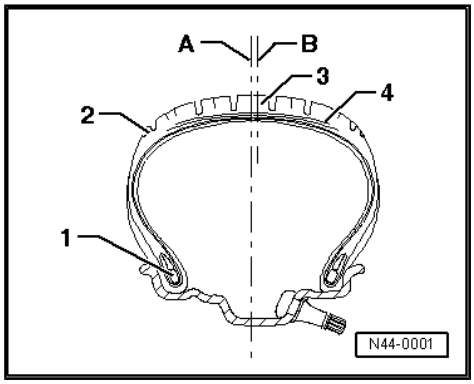

Parts of a tyre

1 - Bead

2 - Shoulder

3 - Tread

4 - Steel cord belt

A - Geometrical centre of tyre

B - Actual centre of belt. It can be offset to inside or outside.

satelettronica

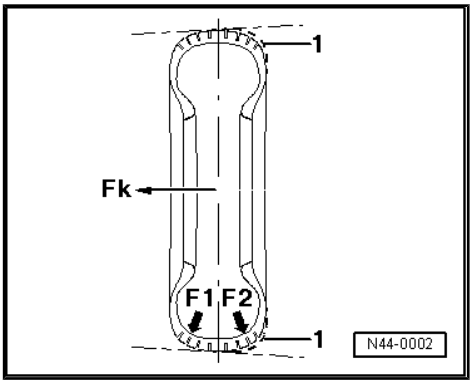

Exaggerated for clarity.

1 - Offset of belt and tread

F1 - Unequal vertical wheel forces

F2 - Unequal vertical wheel forces

Fk - Conicity force

The offset produces differences in stiffness at the inner and outer shoulders of the tyre, resulting in differing vertical wheel forces. Consequently the belt or tread will not be pressed onto the road surface with the same force (F1, F2). A conical, or tapered, shape develops. The resulting force (conicity force Fk) can, depending on the speed, become so great that the vehicle then pulls to one side.

If the force Fk on one wheel of the axle is, for example, 50 Newton, and also 50 Newton on the other wheel, and both forces are exerted in the same direction, the forces are cumulated. Reversing a tyre on the rim can compensate for the lateral pull because the forces then act in opposite directions.

Because the direction in which the force of taper is exerted is not visible, only road tests and strategic rotation of wheels and tyres can establish which tyres cause the pulling.

The tyre consists of numerous components and materials which are vulcanised to form a single part at the end of a complicated manufacturing process. The result is differing production tolerances which make themselves noticeable through more or less strong lateral forces (conicity forces). These forces can also occur in new tyres.

Pulling to one side on front axle

Pulling to one side can be caused by the running gear. However, experience shows that in 90% of all complaints, the tyres cause pulling to one side.

Pulling to one side during normal driving

On a straight, level road surface, the vehicle wants to pull to one side at a constant speed or with moderate acceleration. Force can be felt at the steering wheel.

Pulling to one side during fast acceleration

Pulling to one side during fast acceleration is, in part, due to the basic design of vehicles with front wheel drive. Different friction levels at the left and right wheels or possible irregularities in the road surface (potholes) and consequently varying road adhesion have a substantial influence on the handling characteristics. This does not constitute a complaint which is covered by the warranty.

2.4.3 Remedies when vehicle pulls to one side

Test conditions before and during the road test:

- Check all suspension components on the front and rear axles for damage.
- Check tyre pressure and correct if necessary.
- Check the tyres for external damage. Punctures, cuts, bubbles on the sidewalls, flat spots from braking and/or damage to the tread.
- Ask the customer if the tyre had been damaged by a nail or similar object and was repaired by a tyre dealer. It may be necessary to renew such tyres.

Copyright by Volkswagen AG. Volkswagen AG does not guarantee or accept any liability with respect to the correctness of information in this document. Copyright by Volkswagen AG. Copying or publication or commercial use is not permitted unless authorised by Volkswagen AG.
satelettronica

– Check tyres for even wear and tread depth.
– Are all tyres of the same type, manufacture and tread pattern?
– If the tyres are non-directional, ensure that all DOT classifications on the tyre face outwards. The wheels and/or tyres on the vehicle may have already been changed around at an earlier date.
– Is the make of tyre approved by the factory as original equipment?
– Perform the road test on a road which is level, straight and ungrooved and does not drop off to one side.
– Perform the test drive with the customer under the conditions specified above. Ask the customer to demonstrate the problem.

Note

There must be no crosswind during the road test.

If the complaint is justified, we recommend rotating the wheels and tyres as described below.

Before you begin, observe the following notes; otherwise your efforts may not have the desired effect.

Note

- *Mark the tyres before the first rotation, e.g. FR, FL, RR, RL.*
- *After rotating wheels or reversing the tyre on its rim, you must observe very carefully how the vehicle behaves during the road test. Note how and what was changed.*
- *Assess the intensity of or a possible change in the tendency to pull to one side.*
- *For this purpose, it is important that the road tests are always performed by the same person on the same road. It is best to drive the „test course“ in both directions.*
- *Replacing a tyre with a new tyre does not guarantee that pulling to one side will be eliminated. Therefore it is recommended as a first step to carry out the strategic rotation of the wheels as described below.*
- *If there are large differences in the tread depth of the tyres on the front and rear axles, the tyres with the deeper tread should always be mounted on the front axle.*

2.4.4 Strategic rotation of wheels having non-directional tyres

↓	
Perform a road test to determine if the vehicle pulls to one side and if so, which side.	
↓	
If the vehicle pulls to one side, interchange the front wheels.	
↓	
Perform road test.	
Vehicle travels in a straight line - END	
Vehicle pulls to other side	Vehicle pulls to the same side
↓	↓

Protected by copyright. Copying, distribution and publication, in whole or in part, unless authorised by Volkswagen AG. Volkswagen AG does not guarantee or accept any liability with respect to the correctness of information in this document. Copyright by Volkswagen AG.

satelettronica

<table>
<tr><td colspan="2">Reverse one front tyre on its rim (direction of rotation is reversed).</td><td colspan="2">Interchange front and rear tyres.</td></tr>
<tr><td colspan="2">↓</td><td colspan="2">↓</td></tr>
<tr><td colspan="2">Perform road test.</td><td colspan="2">Perform road test.</td></tr>
<tr><td colspan="2">Vehicle travels in a straight line - END</td><td colspan="2">Vehicle travels in a straight line - END</td></tr>
<tr><td colspan="2">Vehicle does not travel in a straight line</td><td colspan="2">Vehicle does not travel in a straight line</td></tr>
<tr><td colspan="2">↓</td><td colspan="2">↓</td></tr>
<tr><td colspan="2">Interchange the front and rear wheels.</td><td>Vehicle pulls to other side</td><td>No change</td></tr>
<tr><td colspan="2">↓</td><td>↓</td><td>↓</td></tr>
<tr><td colspan="2">Perform road test.</td><td rowspan="5">Reverse one front tyre on its rim (direction of rotation is reversed).</td><td rowspan="10">Check alignment of front and rear wheels and adjust if necessary.
If the alignment is correct, contact Product Support.</td></tr>
<tr><td colspan="2">Vehicle travels in a straight line - END</td></tr>
<tr><td colspan="2">Vehicle does not travel in a straight line</td></tr>
<tr><td colspan="2">↓</td></tr>
<tr><td colspan="2">Interchange front wheels.</td></tr>
<tr><td colspan="2">↓</td><td>↓</td></tr>
<tr><td colspan="2">Perform road test.</td><td>Perform road test.</td></tr>
<tr><td>Vehicle travels in a straight line - END</td><td>Vehicle does not travel in a straight line</td><td>Vehicle travels in a straight line - END</td></tr>
<tr><td rowspan="6"></td><td>↓</td><td>Vehicle does not travel in a straight line</td></tr>
<tr><td>Mount new tyres on front axle.</td><td>Mount new tyres on front axle.</td></tr>
<tr><td>↓</td><td>↓</td></tr>
<tr><td>Perform road test.</td><td>Perform road test.</td></tr>
<tr><td>Vehicle travels in a straight line - END</td><td>Vehicle travels in a straight line - END</td></tr>
<tr><td>↓</td><td>↓</td></tr>
<tr><td colspan="4">Vehicle does not travel in a straight line; contact Product Support.</td></tr>
</table>

2.4.5 Strategic rotation of wheels having unidirectional tyres

↓
Perform a road test to determine if the vehicle pulls to one side and if so, which side.
↓
If the vehicle pulls to one side, interchange front and back wheels with tyres.
↓
Perform road test.
Vehicle travels in a straight line - END
Vehicle does not travel in a straight line
↓
First renew one tyre on the front axle.
↓
Perform road test.
Vehicle travels in a straight line - END
Vehicle does not travel in a straight line

Protected by copyright. Copying for private or commercial purposes, in part or in whole, is not permitted unless authorised by Volkswagen AG. Volkswagen AG does not guarantee or accept any liability with respect to the correctness of information in this document. Copyright by Volkswagen AG.

satelettronica

↓
Renew other tyre on the front axle.
↓
Perform road test.
Vehicle travels in a straight line - END
Vehicle does not travel in a straight line
↓
Check front and rear wheel alignment.
↓
Perform road test.
Vehicle travels in a straight line - END
Vehicle does not travel in a straight line; contact Product Support.

2.4.6 Tyres with a red spot

During production, tyres marked with a red spot were installed. This point identifies the direction of the conicity force -Fk-.

Explanation of conicity force ⇒ page 28 .

The tyres are mounted so that the red spot faces inwards. This should compensate for the conicity force of the tyres.

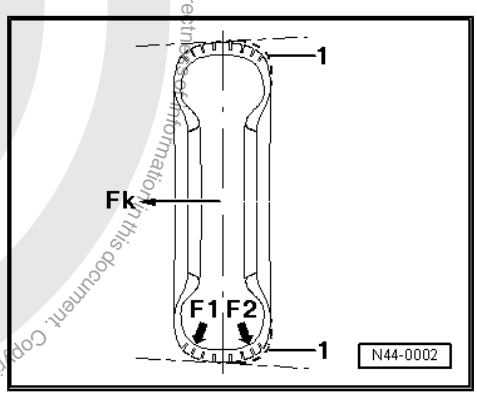

Tyre renewal

New tyres which do not have a red spot should be mounted so that the DOT designation ⇒ Item 11 (page 40) faces in the same direction as did the one on the old tyre.

Other coloured spots

Other spots of colour which may be on new tyres do not identify the conicity force of the tyre.

Dates for installation of tyres with red spots

Factory	Vehicle identification number	Model
Pamplona	6N Z Y 000000	Polo 1995 >
Wolfsburg	6N Z W 000000	Polo 1995 >
Wolfsburg Mosel Brussels	1H Z SW 14900 1H Z SP 008242 1H Z SB 037769	Golf/Vento/Estate 1992 > Golf 1992 > Golf 1992 >
Brussels	3A Z SB 012901	Passat 1994 >
Emden	3A Z SE 052277	Passat 1994 >
Osnabruck	1E Z SK 012980	Cabriolet 1994 >

2.5 Tyre damage

2.5.1 General information

As tyre damage can have serious consequences, you and the driver should regularly check the tyres to identify any problems at an early stage.

Damaged tyres cannot withstand driving conditions such as high speed, long distances, sporty driving, and so on.

Protected by copyright. Copyright by Volkswagen AG. Volkswagen AG does not guarantee or accept any liability with respect to the correctness of information in this document. Copyright by Volkswagen AG. Protected by copyright. Copying, in part or in whole, is not permitted unless authorised by Volkswagen AG. Volkswagen AG
satelettronica

Damage can be caused in a number of ways:

- Driving with insufficient tyre pressure
- Assembly error when tyres were fitted on rims
- Damage by embedding objects
- Ageing
- Improper storage

> ⚠ **WARNING**
>
> ***Whenever a safety risk cannot be ruled out, the tyre must be renewed.***

2.5.2 Construction of a radial belted tyre

Cross section of a radial belted tyre

1 - Tread block

2 - Tread groove

3 - Tread

4 - Nylon ply

5 - Belt layers

- ❑ Usually made of steel

6 - Bead core

- ❑ Consists of steel wires vulcanised into rubber.
- ❑ Ensures secure seating of the tyre on the rim.

7 - Bead filler

8 - Rim flange protection

- ❑ Protects the rim and tyre from abrasion from, for example, contact with the kerb
- ❑ Tyres with Maximum Flange Shield (or rim protector bar) are marked with the abbreviation MFS.

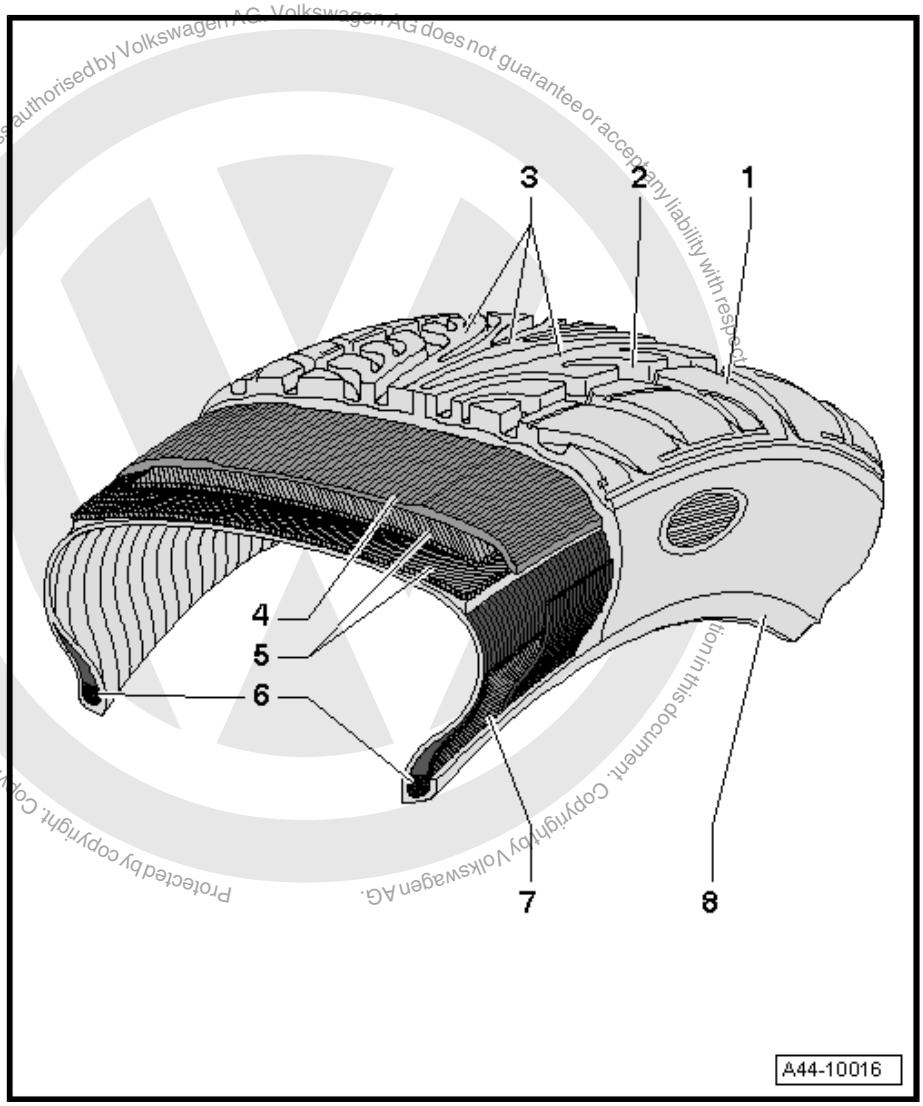

The nylon ply -4-, belt layers -5-, bead cores -6- and bead filler -7- form the carcass. The carcass is the „load-bearing structure“ of the tyre.

Protected by copyright. Copying for private or commercial purposes, in part or in whole, is not permitted unless authorised by Volkswagen AG. Volkswagen AG does not guarantee or accept any liability with respect to the contents of this document. Copyright by Volkswagen AG.
satelettronica

2.5.3 Impact damage

A swelling in the sidewall of the tyre indicates that the substructure of the carcass has been damaged.

Typical causes for such damage include, for example, driving over kerbs at a sharp angle.

Pinching the tyre in this way can damage the carcass.

The substructure of the tyre is stretched so far that individual fibres in the carcass may be broken.

The extent of the damage depends on the speed of impact, the angle of impact, the tyre pressure, the axle load and the type of obstacle.

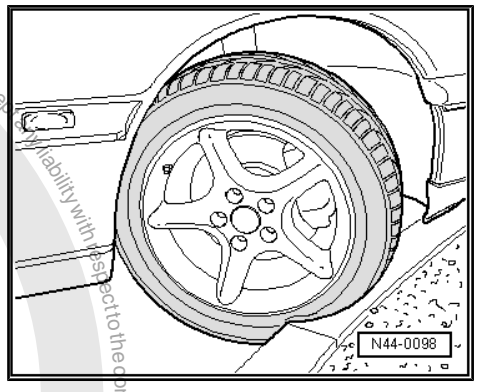

Pinch marks on tyre sidewall -arrows-

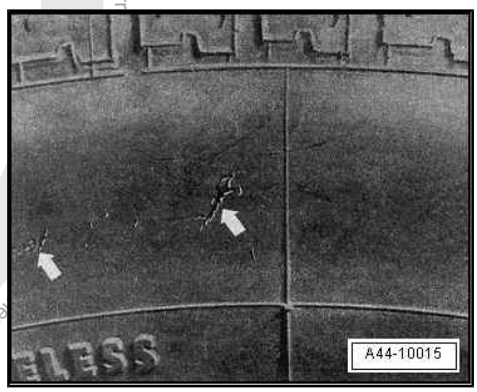

Note

- *Driving over kerbs should be avoided.*
- *If driving over a kerb is unavoidable, do so very slowly and as square-on as possible.*

Interior view of a tyre with a punctured carcass

Due to a severe impact, the carcass was pinched on the wheel rim flange and is ruptured in the contact area.

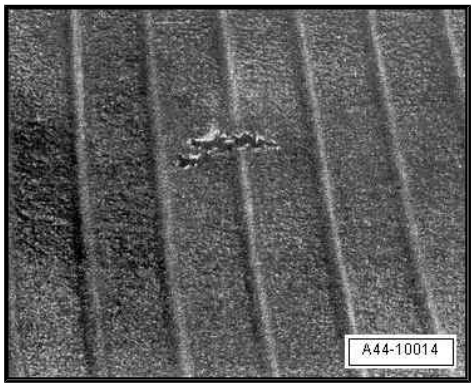

Damage inside tyre due to impact injury (double rupture)

Double rupture -arrows- caused by pinching when a kerb was driven over. Often not detectable from outside.

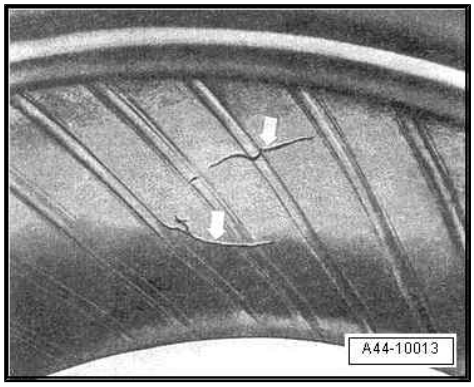

satelettronica

2.5.4 Cuts

Cut caused by a sharp-edged obstacle -arrow-

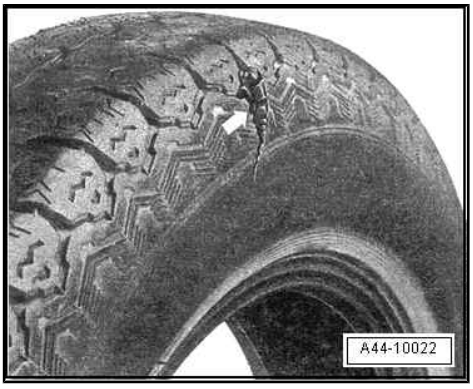

2.5.5 Damage caused by foreign bodies

Driving over hard, pointed objects like nails, screws and the like can pierce the tyre.

This always leads to tyre damage.

Damage due to embedded foreign body

Often, the object -marking- is so securely embedded in the tyre that it will not free itself even at higher speeds. Consequently, it can act as a plug and seal the tyre relatively well. This results in a gradual loss of pressure, which the driver will not notice immediately, but which can lead to sudden and complete tyre failure.

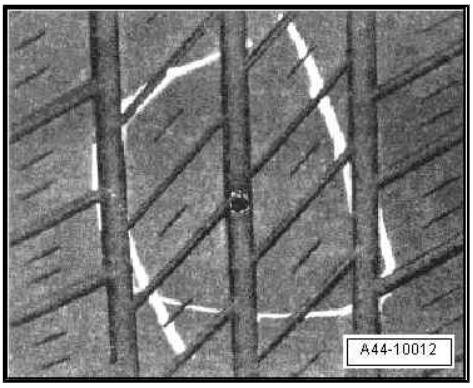

Note

No repair should be attempted on a steel-belted tyre of which the structure has been punctured by a foreign body.

2.5.6 Loss of air from tyre

If the customer complains of a loss of air from a tyre, it is essential that you check for embedded foreign bodies.

Note

No repair should be attempted on a steel belted tyre of which the structure has been punctured by a foreign body.

Corrosion can develop on the steel wires. This will always lead to the separation of the rubber from the steel belt.

Generally, one cannot determine when the foreign body was embedded. The tyre structure may already have been damaged as a result of driving with insufficient tyre pressure.

Damaged belt wires will sooner or later lead to separation of the rubber from the steel belt. As a result, the tyre can fail completely at some point long after the tyre was first damaged.

Tyre damage caused by foreign bodies is not covered by the warranty.

2.5.7 Tyre pressure

The tyre pressure must be checked regularly. We recommend checking tyre pressure every two weeks. The correct tyre pressure is especially important during long trips or if a heavy load is

satelettronica

to be carried. A sporty driving style also requires correct or even slightly increased tyre pressure.

Slow loss of tyre pressure

The slow loss of tyre pressure is especially problematic because even experienced drivers often do not notice it.

Insufficient tyre pressure and the related increase in flexing (internal friction) cause the tyre material to heat up considerably and may lead to the separation of the various components and rubber compounds.

In the end, the tyre is usually destroyed completely ⇒ page 36 .

The cause for the slow pressure loss cannot always be determined because the tyre is severely damaged and components of the tyre are missing.

2.5.8 Tyre damage due to insufficient tyre pressure

The most common causes for tyre failure are minor external damage, a defective valve or a leaking rim due to corrosion or damage.

Separation of carcass and rubber

Excessive heating due to driving with substantially insufficient tyre pressure ⇒ page 37 led to overheating and subsequent separation of the carcass from the rubber material -arrows-.

The tyre shown here was periodically driven with an inflation pressure which was insufficient for the load. Typical evidence for this is the circumferential scuffing along the bead caused by the wheel flange and also the discolouration. Small, furrowed creases are visible along the inside of the sidewall.

When the tyre rolls, strong shear forces develop between the layers of steel cord, especially at the ends of the belts.

Tyres with wide, circumferential furrows near the bead

Wide, circumferential furrows near the bead -arrows- indicate that the tyre was driven with insufficient pressure.

Driving a vehicle with insufficient tyre pressure or ignoring or not recognising tyre damage can have serious consequences.

The tyre can no longer withstand the forces which develop when the vehicle is driven.

The defects mentioned above severely restrict the function of the tyre. The rubber compounds separate, which results in the partial separation of tyre components or even its complete destruction.

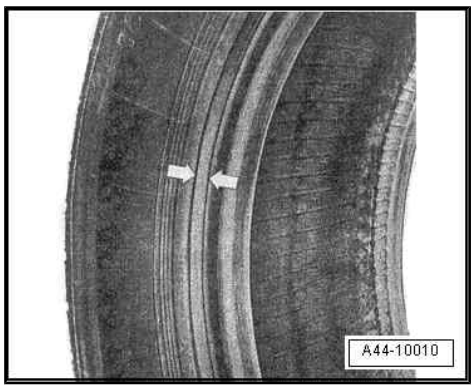

Copyright by Volkswagen AG. Volkswagen AG does not guarantee or accept any liability with respect to the correctness of information. Copyright by Volkswagen AG. Commercial possession of this document is prohibited. Distribution, reproduction or publication of this document is not permitted without the express consent of Volkswagen AG.
satelettronica

Tyre with stripped tread or stripped protector

Such damage usually develops over a longer period of time. If an already damaged tyre is exposed to high stress, the centrifugal forces which occur at high speeds can tear components off the tyre.

The figure shows a tyre with stripped protector due to travel with insufficient tyre pressure.

2.5.9 Rising tyre temperature caused by insufficient inflation pressure

The graph shows the temperature development of a tyre at a speed of 180 km/h.

A - When specified tyre pressure is maintained, the temperature will remain stable.

B - Danger zone: When tyre pressure is 0.3 bar below specification, the temperature rises to above 120° C at higher speeds.

C - Critical temperature threshold: A tyre defect will develop.

T - Temperature in °C

t - Travel time in minutes

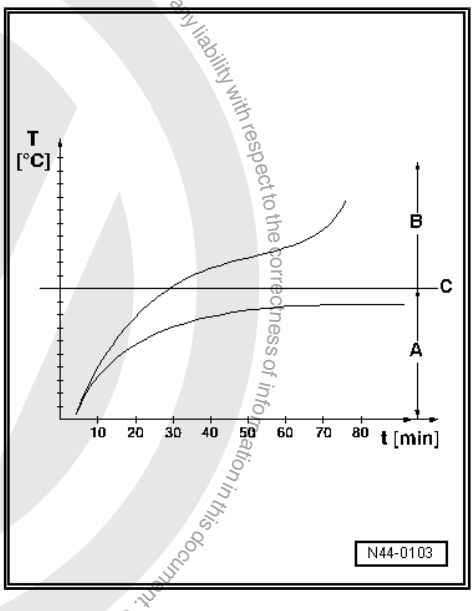

Protected by copyright. Copying for private or commercial purposes, in part or in whole, is not permitted unless authorised by Volkswagen AG. Volkswagen AG does not guarantee or accept any liability with respect to the correctness of information in this document. Copyright by Volkswagen AG.
satelettronica

2.5.10 Tyre damage due to fitting error (fitting damage)

Bead core broken during tyre inflation.

Modern radial tyres for passenger cars are mounted only on safety rims. Safety rims have a hump -1- running along the bead seat.

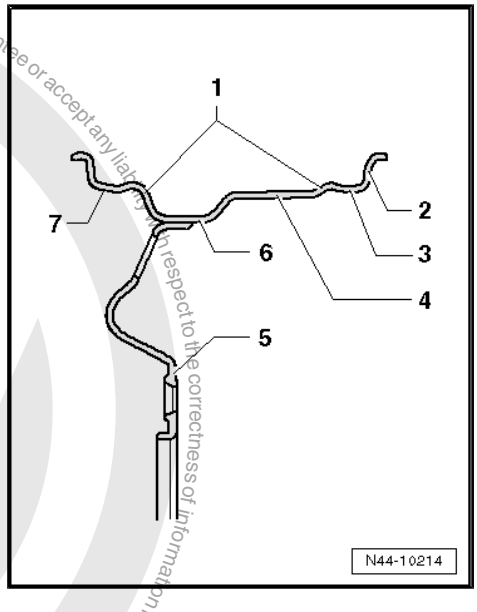

1 - Hump (double hump H 2)

2 - Rim flange

3 - Inner bead seat (e.g. tapered bead seat)

4 - Rim

5 - Wheel

6 - Well

7 - Outer bead seat (e.g. tapered bead seat)

The hump prevents the tyre from being pressed out of the bead seat during travel with insufficient tyre pressure.

When the tyre is inflated, the bead of the tyre may not slip completely over the outer rim hump.

In this case, there is a danger of the bead core becoming overstretched if the tyre pressure is too high. The steel wires would then rupture partially or completely. A broken bead core cannot be detected from the outside.

> ⚠ **WARNING**
>
> - *Tyres with damaged bead cores are not seated safely and securely on the rim. Such tyres are a safety risk!*
> - *In addition, there is a risk of the partly broken bead core breaking apart during continued operation and the tyre could suddenly tear open. If the bead core breaks during inflation, the carcass will also be destroyed.*

Tyre with broken bead core and destroyed carcass

The figure shows a tyre with a broken bead core and destroyed carcass as a result of excess pulling force during fitting.

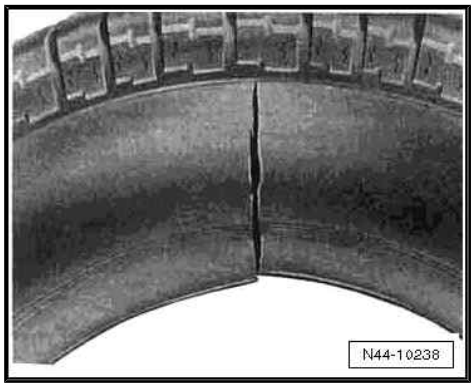

Bead damage due to faulty or incorrect tyre fitting with tyre-fitting machine

The following errors, which may occur when tyres are fitted, can lead to severe tyre damage:

- If the opposite tyre bead is not seated completely in the rim well when the upper bead is rolled in on the tyre fitting machine. ⇒ page 38 .
- If the fitting head is improperly adjusted.
- If the edge of the fitting roller rolls onto the bead.
- If the guide rollers are worn or have sharp edges.

Copyright by Volkswagen AG. Volkswagen AG does not guarantee or accept any liability with respect to the correctness of information in this document. Copying in whole or in part is not permitted unless authorised by Volkswagen AG. Volkswagen AG does not guarantee or accept any liability with respect to the correctness of information in this document. Copyright by Volkswagen AG.

satelettronica

Split tyre bead

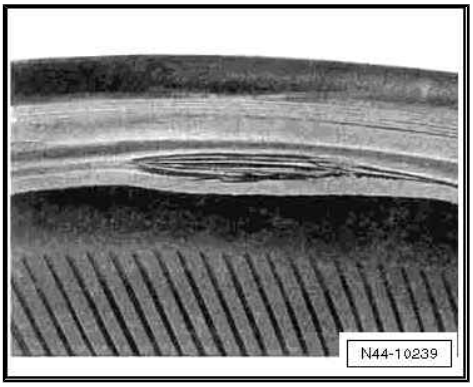

In these cases, the bead, which is under great tension, can be cut into in the direction of rotation, split and/or be pinched off down to the core wire.

It is often possible to identify the tracks of the guide roller as it was applied or ran off where the damage occurred.

Note

Both tyre beads as well as the bead seats must always be coated with assembly paste .

If fitting damage remains undetected, there is a danger that the tyre will fail later during operation.

THEREFORE!

- Never fit a tyre without using assembly paste .
- Do not allow the bead seating pressure to exceed 3 bar.
- Do not allow the tyre inflation pressure to exceed 4 bar.
- When the tyre has been fitted, reduce the tyre pressure to the specified value.

2.6 Facts about wheels and tyres

2.6.1 Identification markings on the tyre sidewall

Example: Dunlop SP Sport 9000

Protected by copyright. Copyright by Volkswagen AG.
Volkswagen AG does not guarantee or accept any liability with respect to the correctness of information in this document. Copyright by Volkswagen AG.
Copying for private or commercial purposes, in part or in whole, is not permitted unless authorised by Volkswagen AG.
satelettronica

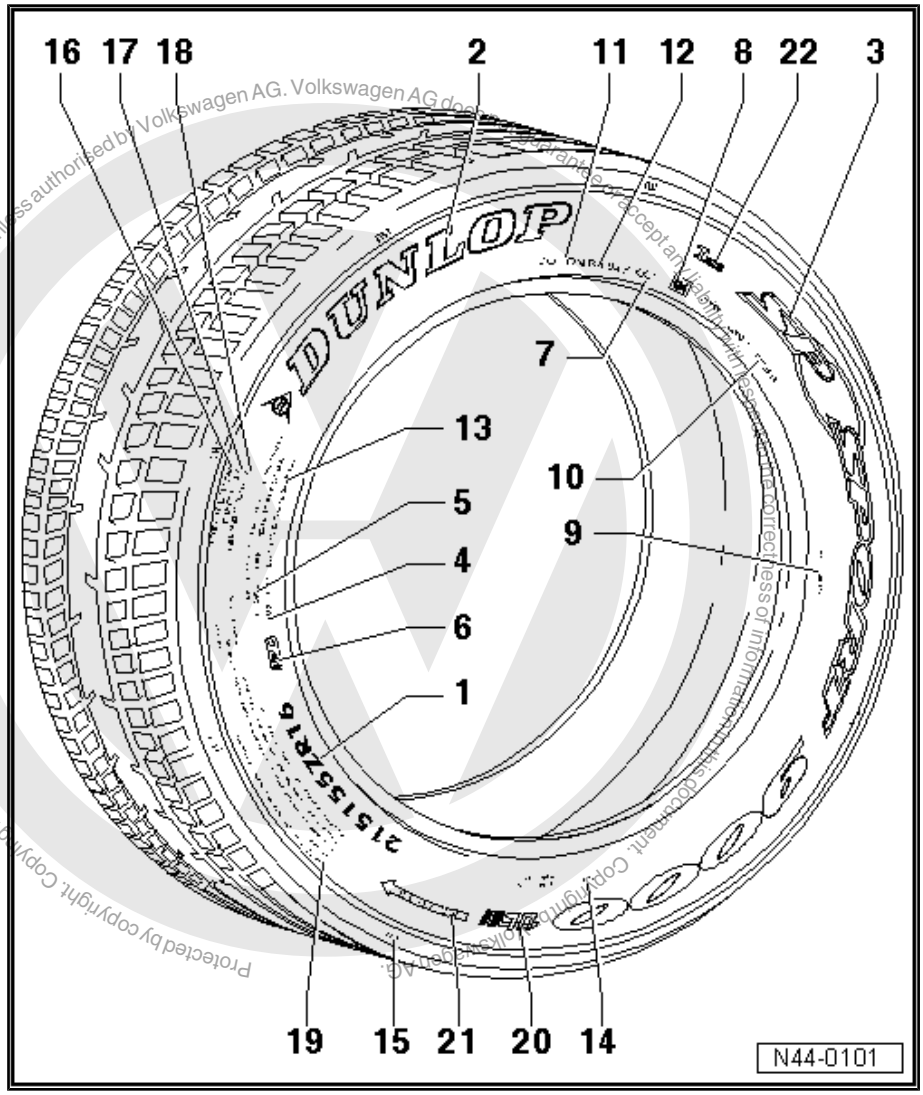

1 - Size code

- ❑ e.g. 195/65 R 15 91T ⇒ page 41

2 - Manufacturer (trade name)

3 - Tread pattern

4 - Code for tubeless tyres

5 - Radial construction

- ❑ Radial cord direction in carcass

6 - Reference for models with „MFS“

7 - Production date

- ❑ Tyre ageing ⇒ page 44

8 - E number = Approval number

- ❑ Tyre fulfils European Guidelines ECE-R30 and EEC92/93

9 - Country of origin

- ❑ e.g. manufactured in Germany

10 - Internal DUNLOP tread code

11 - DOT - Department of Transportation

- ❑ Tyre fulfils standards of the Department of Transportation of the United States of America

12 - DOT Code

- ❑ Identification number for manufacturer's plant, tyre size and tyre model

13 - Maximum permitted load and maximum permitted tyre pressure

- ❑ Data for North America

14 - Number of plies in the centre of the tread and in the sidewalls as well as information about the material

15 - Position of TWIs (Tread Wear Indicators)

16 - Relative expected service life - abrasion resistance

- ❑ based on a US standard test

17 - Rating of wet-braking traction, A, B or C

- ❑ According to a US test

18 - Rating of temperature resistance, A, B or C

- ❑ According to a US test

19 - Safety reference for use or fitting of tyre

20 - Reference to „ultralight construction“

- ❑ Tyre is up to 30% lighter

21 - Specified direction of rotation for tyre

22 - Inmetro code

- ❑ Required for the Brazilian market only

Protected by copyright. Copying for private or commercial purposes, in part or in whole is not permitted unless authorised by Volkswagen AG. Volkswagen AG does not guarantee or accept any liability with respect to the correctness of information in this document. Copyright by Volkswagen AG.

satelettronica

2.6.2 Explanation of tyre markings

Explanation of tyre dimensions

Tyres	Speed	1	2	3	4	5	6	7
Summer tyres	to 240 km/h	195	65	R	15	91	V	-
Winter tyres	to 160 km/h	195	65	R	15	91	Q	M + S
Winter tyres	to 190 km/h	195	65	R	15	91	T	M + S
High-speed tyres	faster than 240 km/h	225	50	ZR	16	91	-	-

1 - Tyre width

2 - Aspect ratio in %

3 - Code for tyre construction „R“ indicates radial

4 - Rim diameter designation

5 - Load rating code/load index (LI)

6 - Speed rating code

7 - Winter tyre/code for all-season tyre

Speed rating/maximum speed

Speed rating code	Maximum speed in km/h
L	120
M	130
N	140
P	150
Q	160
R	170
S	180
T	190
U	200
H	210
V	240
ZR	above 240
W	270
Y	300

Load rating code/load index (LI)

The load rating can be found on the sidewall of the tyre. It provides information about the maximum load that the tyre can bear.

The load rating is included in the size designation of the tyre (e.g. 195/65 R 15 91T). It is indicated on the tyre as a code according to ETRTO. The following table shows the load rating codes used at VW with the corresponding load capacity of the tyres.

Load rating code	Maximum load of tyre in kg
75	387
78	425
79	437
80	450

Protected by copyright. Copying for private or commercial purposes, in part or in whole, is not permitted unless authorised by Volkswagen AG. Volkswagen AG does not guarantee or accept any liability with respect to the correctness of information in this document. Copyright by Volkswagen AG.

satelettronica

Load rating code	Maximum load of tyre in kg
81	462
82	475
83	487
84	500
85	515
86	530
87	545
88	560
89	580
90	600
91	615
92	630
93	650
94	670
95	690
96	710
97	730
98	750
99	775
100	800
101	825
102	850
103	875
104	900
110	1060
112	1120

Protected by copyright. Copyright for private or commercial purposes, in any form, is not permitted unless authorised by Volkswagen AG. Volkswagen AG does not guarantee or accept any liability with respect to the correctness of information in this document. Copyright by Volkswagen AG.

2.6.3 Undulations

Undulations are slight wavy irregularities in the tyre sidewall.

They run from the bead towards the shoulder of the tyre. These parts appear in the figure ⇒ page 28 .

The cause is the accumulation of material at the joints of the tyre components.

Undulations have no effect on:

- Safety,
- Service life,
- Handling or
- Other characteristics of the tyre.

Undulations are visible to varying extents. It is not necessary to inspect the tyre or remove it from the rim.

What causes undulations?

Modern steel belted tyres are constructed with single-ply side walls to save weight.

The sidewall components consist of long strips before they are joined together to form a tyre. They must overlap at the joints. Consequently, slight irregularities or waves are created in the

satelettronica

area of the overlapping parts. The overlaps are easier to see from the outside due to the single-ply construction.

2.6.4 The valve

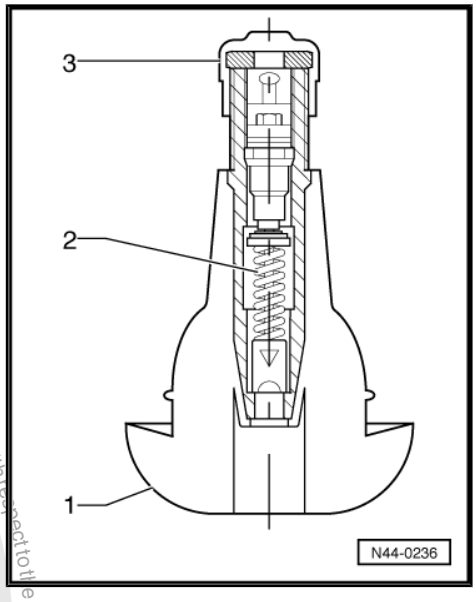

1 - Valve stem

2 - Valve core

3 - Valve cap

1. Valve stem

The rubber valve for tubeless tyres is designed to create an air-tight seal in the hole in the rim. The elastic material of the rubber body presses tightly into the hole in the rim.

In the case of valves with a threaded metal base, a rubber seal is used to seal the rim. The lateral faces of the rim hole are sealing surfaces. They must therefore be free of rust and dirt and must not be damaged.

2. Valve core

The valve core has the most important job in the valve. It creates a seal and enables the regulation of the air pressure. The small flat seal on the valve core can function correctly only if it is free of foreign particles, dirt and moisture. The compressed air system must be free of water and oil!

3. Valve cap

A valve cap must always be screwed onto the valve. It prevents dirt from getting into the valve. Dirt which may be in the valve would reach the seal of the valve plate when the tyre is inflated and cause a leak.

The valve must be renewed every time a new tyre is fitted.

If the vehicle is driven without caps on the valves, there is the danger that dirt may get into the valve. This leads to a gradual loss of air, which in turn can lead to the destruction of the tyre.

- Separation of carcass and rubber ⇒ page 36
- Wide, circumferential furrows near the bead ⇒ page 36
- Stripped tread or stripped protector ⇒ page 37

> ⚠ **WARNING**
>
> ***The valve cap must be fitted tightly to ensure air-tight sealing.***

2.6.5 Tyre storage

Storage room

Rooms used for storing tyres must be

- dark,
- dry,
- cool and
- ventilated.

Copyright by Volkswagen AG. Volkswagen AG does not guarantee or accept any liability with respect to the correctness of information in this document. Copyright by Volkswagen AG. Protected by copyright. Copying for private or commercial purposes, in part or in whole, is not permitted unless authorised by Volkswagen AG.

satelettronica

WARNING

Stored tyres must not come in contact with fuel, oil, grease or chemicals under any circumstances. Otherwise, the material in the tyre will be damaged by chemical reactions which are not always visible.

As a result, dangerous situations can occur when the car is driven.

Of course, tyre damage occurs only if the tyre is in contact with the chemical for a relatively long time. If a few drops of fuel land on a tyre during a fill up, this is of no concern.

Storage of tyres

Complete wheels

Tyres mounted on wheels can be stored flat, stacked one upon the other. In this case, it is important to ensure that the tyres are clean and dry. The inflation pressure should be increased to a maximum of 3 bar.

Tyres without wheels

Tyres without wheels are best stored standing vertically. If tyres lies stacked for longer periods of time, they will be pressed together with a substantial force. The tyres will then be more difficult to fit, as they do not sit on the bead seats. If tyres are stored standing vertically, it is recommended to turn them every 14 days to avoid flat spots.

2.6.6 Tyre ageing

Tyres age as a result of physical and chemical processes, which can impair the function of the tyres. Tyres which are stored for longer periods of time harden and become brittle faster than tyres which are constantly in use on a vehicle. Older tyres may develop hairline cracks as a result of ageing. When tyres are in regular use, the constant flexing activates softeners in the rubber, preventing hardening and the development of cracks.

It is therefore important to take into account not only the tread depth, but also the age of spare tyres, stored tyres and tyres which are not permanently in use. The tyre age can be determined from in the DOT designation, which includes the production date of the tyre.

Example of a DOT number to 31.12.1999

DOT	5 0	9	< Stands for 199_
		Last digit is production year	
	Week		

In this example, the production date is the 50th week of 1999.

Example of a DOT number from 01.01.2000

DO ..... T .	0 1	0 0 Last 2 digits is production year
	Week	

In this example, the production date is the 1st week of 2000.

Protected by copyright. Copyright by Volkswagen AG. Volkswagen AG does not guarantee or accept any liability with respect to the correctness of information in this document. Copyright by Volkswagen AG.
satelettronica

Recommendation

- We recommend using tyres more than 6 years old only in emergencies and only with a cautious driving style.
- When new tyres are fitted, the spare tyre may also be used if it is in flawless condition and is not more than 6 years old. The age of the tyre has a great influence on the high-speed capability of the tyre. It is possible to combine a spare tyre which is several years old with new tyres; however, this can have an adverse influence on car handling.
- Tyres are constantly being further developed, which can lead, for example, to slight changes in the rubber compound, even if the tyres are of the same make, size and tread pattern.
- All VW vehicles are factory-fitted with four identical tyres and wheels.

Front-wheel drive vehicles:

- For reasons of safety, tyres of the same make and with the same tread pattern should be mounted on one axle.

Four-wheel drive vehicles:

- Vehicles with four-wheel drive must always be equipped with four wheels with tyres of the same size, construction, tread pattern and make.

Renewing tyres

Tyres must always be renewed when:

- the legal minimum tread depth of 1.6 mm is reached,
- there is visible mechanical damage
- the tyres are more than 6 years old.

2.6.7 Care and maintenance of alloy wheel rims

Regular care is required to maintain the decorative appearance of alloy wheels over a long period of time.

In particular road salt and dust from brake abrasion must be thoroughly washed off every 2 weeks; otherwise the finish of the alloy wheel will suffer.

Cleaning agents

Suitable cleaning agents:

- Plain water or water with soft soap
- Water and essence of vinegar
- Alloy wheel cleansers without acids or strong solvents

Do not exceed the soaking time of the cleaning agent.

The shorter the recommended soaking time, the harsher and more aggressive the cleaning agent.

Damage to finish

If the finish is damaged, for example by stones, the damage must be repaired as quickly as possible.

Removing adhesive residue from glued balance weights on alloy rims

- Strong solvents and acids attack the finish on alloy wheels and the surface of the wheel becomes matt and milky. Therefore, these substances should not be used.

Protected by copyright. Copyright by Volkswagen AG. Volkswagen AG does not guarantee or accept any liability with respect to the correctness of information in this document. Copyright by Volkswagen AG. Reproduction for commercial purposes, in part, or in whole, is not permitted.

satelettronica

- To remove adhesive residue on alloy wheels, use alloy cleansers or a petrol-based cleanser. Do not exceed the soaking time of the cleaning agent.
- After cleaning or removing adhesive residue from wheels, rinse them with water.

2.6.8 Changing wheels

Vehicles with front-wheel drive exhibit more tread wear on the front wheels due to the greater forces they have to transmit.

In order for all 4 wheels on the vehicle to have the same service life, we recommend rotating the front and rear wheels and tyres.

Ensure that uni-directional tyres are not reversed.

The longer the tyre runs at one position, the more it wears at certain points. Therefore it is recommended to rotate the wheels at short intervals, for example every 5,000 km.

Diagonal rotation is possible only with non-directional tyres. This method of wheel rotation is especially advantageous in the case of saw-tooth wear ⇒ page 18 .

If saw-tooth wear has already progressed and the tread is worn to more than 50%, only slight improvements would be achieved and rotation is not recommended. The elasticity of the tread blocks declines and the saw-tooth wear does not progress.

2.6.9 Instructions for changing or fitting wheels

> ⚠ **WARNING**
>
> *Perform the checks and follow the instructions listed below. This is important to ensure that the wheel bolts and the wheels are properly secured.*

Perform the following steps with the wheel (rim) removed.

1. Check that the contact surfaces between the brake disc or brake drum and the wheel (rim) are free of corrosion and dirt.

   The tapered seats [5] of the wheels (rims) and the wheel bolts must also be free of oil, grease, corrosion and dirt.

– Remove any oil, grease, dirt and corrosion.

2. Check that the centring hole in the wheel (rim) and the centring flange on the wheel hub are free of corrosion and dirt.

– Remove any dirt and corrosion.

3. Check whether the wheel bolts can be easily screwed in by hand. The thread of the wheel bolts must not contact the bore in the brake disc.

   If the thread of the wheel bolt touches the hole, turn the brake disc relative to the wheel hub accordingly.

– Use a wire brush or similar to clean dirty wheel bolts.

> ⚠ **WARNING**
>
> *Corroded or damaged wheel bolts must be renewed!*

Protected by copyright. Copying for private or commercial purposes, in part or in whole, is not permitted unless authorised by Volkswagen AG. Volkswagen AG does not guarantee or accept any liability with respect to the correctness of information in this document. Copyright by Volkswagen AG.
satelettronica

Protected by copyright. Copyright by Volkswagen AG. Volkswagen AG does not guarantee or accept any liability with respect to the correctness of information in this document. Copyright by Volkswagen AG. Reproduction of material published in this document, in part or in whole, is not permitted unless authorised by Volkswagen AG.

Fitting wheels

1. When fitting the wheel, screw in all wheel bolts uniformly by hand.

2. Tighten wheel bolts diagonally to approx. 30 Nm using, e.g., a wheel brace.

3. Lower the vehicle to the floor and tighten all wheel bolts diagonally to the specified torque.

> ⚠ WARNING
>
> *Never use an impact wrench to mount wheels!*

5) A spherical cap is the curved surface of a section of a sphere cut by a plane. The tapered seats on the wheel bolt and in the wheel (rim) in the wheel bolt holes are spherical caps.

2.6.10 Tyres with flange protection

The tyre industry produces tyres with flange protection for alloy wheels. The flange protection is intended to protect alloy wheels from damage due to contact with kerbs.

The combination of tyres with flange protection, steel wheels and a full-size hub cap can lead to the loss of the hub cap during operation. The flexing of the tyre separates the hub cap from its seat.

> ⚠ WARNING
>
> *When fitting tyres, always make sure that only tyres without flange protection are fitted to steel rims.*

The figure shows a prohibited combination of steel rim, full-size hub cap and a tyre with flange protection.

A - Flange protection

B - Flange of a steel rim

C - Full-size hub cap

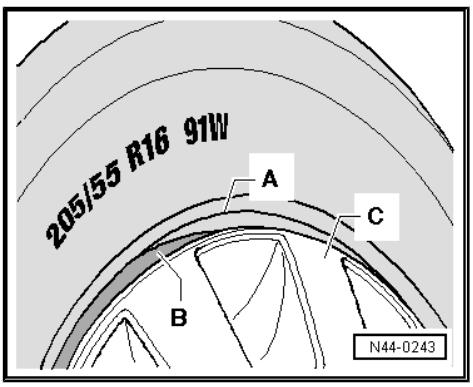

> ⚠ WARNING
>
> *This combination must never be fitted!*

2.6.11 Notes on use of temporary spare wheels

Inform your customers about the following notes and, if appropriate, refer also to the user's manual of the vehicle as the need arises.

The following notes also apply to spare wheels, e.g. 7 J x 16 with 205/55 R 16 tyres, marked with a yellow sticker with the text „MAX 80 km/h“ or „MAX 50 mph“

satelettronica

Copyright by Volkswagen AG. Volkswagen AG does not guarantee or accept any liability with respect to the correctness of information in this document. Copyright by Volkswagen AG. Reproduction prohibited unless authorised by Volkswagen AG.

Note

- *Depending on vehicle equipment, e.g. Passat cars with alloy wheels and 225 mm tyres have a spare wheel with the sticker described above instead of a temporary spare wheel.*
- *The spare wheel or temporary spare wheel is intended only for temporary use over short distances. Therefore, it must be replaces by a normal wheel as quickly as possible.*
- *After the temporary or spare wheel has been fitted, the tyre pressure must be checked as soon as possible. The correct tyre pressure can be found in the tyre pressure table or the Maintenance Manual of the respective vehicle.*
- *Always observe the speed warning on the temporary spare wheel („MAX 80 km/h“ or „MAX 50 mph“).*
- *Full acceleration, hard braking and driving fast through curves should be avoided.*
- *Never drive with more than one spare wheel or temporary spare wheel.*
- *The use of snow chains on the temporary spare wheel is not permitted for technical reasons.*
- *If it is necessary to travel with snow chains, the temporary spare wheel must be fitted on the rear axle even if the front tyre has been damaged. The now available rear wheel must then be fitted in place of the defective front wheel.*

2.6.12 Winter tyres

For driving in winter, we recommend that the vehicle be equipped with winter tyres in the sizes recommended in table 2 of the parts certificates.

As a basic rule:

All tyre sizes listed in the vehicle documents can also be used as winter tyres.

The handling characteristics may be affected by the use of winter tyres and the possible change in the dimensions of the wheel and tyre. Therefore, when using winter tyres, you must adapt your speed to the changed handling characteristics and to the road conditions.

To achieve the best possible handling, winter tyres must be fitted on all wheels.

If the vehicle is equipped with rims other than the factory-fitted rims, you must take the following into consideration when you fit winter tyres:

- Wheels and wheel bolts are matched.
- Whenever the wheels are changed, corresponding wheel bolts of the correct length and with the correctly shaped tapered seats are used [6)]. The secure fit of the wheels and the functioning of the brakes depends this.
- The suitability of winter tyres with less than 4...5 mm tread depth for winter operation is limited.
- Some countries require winter tyres to have a tread depth of at least 4 mm.

satelettronica

- We recommend that winter tyres be replaced after no more than six years. The special „winter properties“ of these tyres decline with age, regardless of how much they are used.

6) A spherical cap is the curved surface of a section of a sphere cut by a plane. You can see a spherical cap on the wheel bolt and in the wheel (rim) in the tapped hole for the wheel bolt.

2.6.13 Winter tyres with speed symbol „V“

The tyre industry now supplies winter tyres with speed symbol "V". But only under certain conditions may these tyres be used up to the maximum permitted speed v_{max} = 240 km/h.

Vehicles with V tyres

Vehicles requiring V tyres according to the vehicle's title document can use winter tyres with speed symbol V without restriction at speeds up to v_{max} =240 km/h.

Vehicles with W, Y or ZR tyres:

Under certain circumstances, vehicles requiring W, Y or ZR tyres according to the vehicle's title document may not be driven at speeds of v_{max} = 240 km/h.

Why?

V summer tyres and V winter tyres without special identification ⇒ page 49 have 100 % of their maximum load capacity (as specified by their load index „LI“) ⇒ page 49 only up to speeds of 210 km/h.

Speeds above 210 km/h are possible with V winter tyres only if the maximum load of the tyres is not exceeded. The load capacity of the tyres decreases as the speed increases.

The maximum permitted axle load and the maximum achievable speed of some VW vehicles are so high that the load capacity of the V tyres is not sufficient for speeds of up to 240 km/h.

Example: Tyres 205/55 R 16 91V

The load index (LI) 91 certifies that this tyre has a load capacity of 615 kg per tyre at up to 210 km/h.

At a speed of 240 km/h, this tyre can carry a load of only 560 kg, i.e. the axle load may not exceed 1120 kg.

The Passat Estate V6 4Motion has a permitted axle load of 1150 kg and an achievable maximum speed of 232 km/h. This vehicle may only travel at speeds of up to 230 km/h with V winter tyres.

This applies to all V winter tyres without special markings.

2.6.14 Extra Load (XL) V winter tyres

V winter tyres marked XL have a higher load capacity than V winter tyres without this code.

XL V winter tyres allow a higher speed, but this does not mean that the top speed of a V tyre is 240 km/h for every VW car.

The same conditions apply to these tyres as to V winter tyres without a special code!

Tyre pressure for Extra Load V tyres

Extra Load V winter tyres generally require 0.2 bar greater pressure (this does not apply for the Phaeton 2003 >).

The following table ⇒ page 50 shows how fast VW cars may drive with V winter tyres, depending on their respective axle load.

Protected by copyright. Copyright by Volkswagen AG.
Copyright by Volkswagen AG. Volkswagen AG does not guarantee or accept any liability with respect to the correctness of information in this document.
Copyright by Volkswagen AG. Volkswagen AG does not guarantee or accept any liability with respect to the correctness of information in this document.
satelettronica

Maximum speeds for V and Extra Load (XL) winter tyres

Vehicle	Version	Type of drivetrain	Max. axle load	Winter tyres	v_{max} with V winter tyres
Passat 1994 > 2.8l/135 kW VR6	Estate	Syncro	1,060 kg	205/50 R 15 86V	210 km/h
Passat 1994 > 2.8l/128 kW VR6	Saloon	Front-wheel drive	1,020 kg	205/50 R 15 86V	220 km/h
Passat 1994 > 2.8l/128 kW VR6	Estate	Front-wheel drive	1,020 kg	205/50 R 15 86V	220 km/h
Passat 1997 > 2.5l/110 kW TDI	Saloon	4Motion	1,190 kg	205/55 R 16 91V	220 km/h
Passat 1997 > 2.8l/142 kW V6	Saloon	4Motion	1,130 kg	205/55 R 16 91V	235 km/h
Passat 1997 > 2.8l/142 kW V6	Estate	4Motion	1,150 kg	205/55 R 16 91V	230 km/h
Passat 2001 > 2.8l/142 kW V6	Saloon	4Motion	1,190 kg	205/55 R 16 91V	240 km/h
Passat 2001 > 2.8l/142 kW V6	Saloon	4Motion Automatic	1,140 kg	205/55 R 16 91V	230 km/h
Passat 2001 > 2.8l/142 kW V6	Estate	4Motion	1,140 kg	205/55 R 16 91V	230 km/h
Passat 2001 > 2.8l/142 kW V6	Estate	4Motion Automatic	1,150 kg	205/55 R 16 91V	230 km/h
Passat W8	Saloon	4Motion Manual gearbox	1,180 kg	205/50 R 17 93V extra load	240 km/h
Passat W8	Saloon	4Motion Automatic	1,230 kg	205/50 R 17 93V extra load	225 km/h
Passat W8	Estate	4Motion Manual gearbox	1,180 kg	205/50 R 17 93V extra load	240 km/h
Passat W8	Estate	4Motion Automatic	1,230 kg	205/50 R 17 93V extra load	225 km/h
Passat Protect 2.8l/142 kW V6	Saloon	4Motion Manual gearbox	1,260 kg	205/55 R 16 94V extra load	225 km/h
Passat Protect 4.0l/202 kW V6 W8	Saloon	4Motion Automatic	1,340 kg	205/55 R 16 94V extra load	210 km/h
Phaeton 2003 > 3.2l/177 kW V6 Short and long wheelbase	Saloon	Front-wheel drive	1,420 kg	235/60 R 16 100 V	240 km/h
				235/55 R 17 99V	235 km/h
				235/50 R 18 101 V extra load	240 km/h
				255/40 R 19 100 V extra load	240 km/h
Phaeton 2003 > 3.0l/ 165 kW V6 TDI Short and long wheelbase	Saloon	4Motion	1,490 kg	235/55 R 17 99V	220 km/h
				235/50 R 18 101 V extra load	240 km/h
				255/40 R 19 100 V extra load	230 km/h
Phaeton 2003 > 4.2l/246 kW V8	Saloon	4Motion	1,430 kg	235/55 R 17 99V	235 km/h

Protected by copyright. Copyright by Volkswagen AG. Volkswagen AG does not guarantee or accept any liability with respect to the correctness of information in this document. Copyright by Volkswagen AG. Reproduction, in part or in whole, is not permitted unless authorised by Volkswagen AG.
satelettronica

Vehicle	Version	Type of drivetrain	Max. axle load	Winter tyres	v_{max} with V winter tyres
Short wheelbase				235/50 R 18 101 V extra load	240 km/h
				255/40 R 19 100 V extra load	240 km/h
Phaeton 2003 > 4.2l/246 kW V8 Long wheelbase	Saloon	4Motion	1,450 kg	235/55 R 17 99V	230 km/h
				235/50 R 18 101 V extra load	240 km/h
				255/40 R 19 100 V extra load	240 km/h
Phaeton 2003 > 5.0l/ 230 kW V10 TDI Short wheelbase	Saloon	4Motion	1,640 kg	235/50 R 18 101 V extra load	210 km/h
Phaeton 2003 > 5.0l/ 230 kW V10 TDI Long wheelbase	Saloon	4Motion	1,650 kg	235/50 R 18 101 V extra load	210 km/h
Phaeton 2003 > 6.0l/309 kW W12 Short and long wheelbase	Saloon	4Motion	1,550 kg	235/50 R 18 101 V extra load	235 km/h
				255/40 R 19 100 V extra load	220 km/h
Sharan 2001 > 2.8l/150 kW VR6	Saloon	Front-wheel drive	1,280 kg	205/55 R 16 94V extra load	210 km/h
Sharan 2001 > 2.8l/150 kW VR6	Saloon	4Motion	1,330 kg	205/55 R 16 94V extra load	210 km/h

Registration regulations in the Federal Republic of Germany

Only when winter tyres are in use may the top speed that a vehicle can achieve be greater than the maximum speed specified by the speed symbol of the tyre.

In this case, a label stating the following must be attached:

Important! Winter tyres!
Maximum speed ... km/h

Note

This label must be clearly visible to the driver!

Winter tyre pressures

The tyre pressure for winter tyres must be 0.2 bar more than the applicable tyre pressure for standard tyres but not more than 3.5 bar.

For the Phaeton 2003 >, the tyre pressure of winter tyres must not be increased. In this case, the tyre pressure for summer tyres equals the tyre pressure for winter tyres.

Protected by copyright. Copying for private or commercial purposes, in part or in whole, is not permitted unless authorised by Volkswagen AG. Volkswagen AG does not guarantee or accept any liability with respect to the correctness of information in this document. Copyright by Volkswagen AG.
sateletronica

2.6.15 Reinforced and Extra Load (XL) tyres

Some tyre manufacturers have for some time replaced the designation „Reinforced“ with the designation „Extra Load“. This designation has long been standard in non-European countries. Technically, there is no difference between them.

Some tyre manufacturers also use the designation „XL“ for Extra Load tyres.

Tyres with the designation „Reinforced“ or „Extra Load (XL)“ are of equal quality.

2.6.16 Snow chains

Snow chains must be fitted to driven wheels only.

On most four-wheel drive vehicles, snow chains may be used only on the front wheels, but on the Touareg, also the rear wheels.

It is not possible to use snow chains with all wheel and tyre combinations. Notes on this can be found in the vehicle tables of the parts certificate.

If no particular type of snow chain is specified, then small-link chains may be used. These, including the chain fastener, may not protrude more than 15 mm beyond the wheel's tread and the inner wall.

On some models, only special, small-link chains are possible with certain wheel and tyre combinations. Notes on this can be found in the vehicle tables of the parts certificate.

The maximum speed permitted by law when driving with snow chains is 50 km/h.

Snow chains should be removed when there is no snow on the road. There is no point in having them on the wheels, as they adversely affect the vehicle's handling. It causes unnecessary stress on the tyres and above average wear on the chains.

Protected by copyright. Copying for private or commercial purposes, in whole or in part, is not permitted unless authorised by Volkswagen AG. Volkswagen AG does not guarantee or accept any liability with respect to the correctness of information in this document. Copyright by Volkswagen AG.
satelettronica

44 – Wheels, tyres, vehicle geometry

1 Lupo 3L, Lupo FSI, Lupo GTI from model year 1999

General

Volkswagen vehicles are built according to the latest findings in safety engineering. To keep it that way, we recommend the use of genuine Volkswagen spare parts only. You can recognise this by the VW Audi logo and by the part number. It has been established that these parts are reliable, safe and suitable.

Despite constant appraisal of the market, we cannot assess other products on these points, even when in isolated cases they have been passed by official inspectors or have been granted official approval. Therefore, we cannot, of course, assume any liability if these products are installed.

> ⚠ **WARNING**
>
> *The products from Volkswagen genuine parts and Votex genuine accessories may differ in fitting requirements, torque specifications and so on.*
>
> *Always follow the respective fitting and operating instructions.*

The wheel and tyre combinations or changes listed in the vehicle tables refer exclusively to Volkswagen Genuine wheels. Approval of wheel and tyre combinations or a change to wheels from the accessories trade is not possible with the parts certificate attached here.

> ⚠ **WARNING**
>
> *The fitting instructions and torque specifications for wheels from Votex genuine accessories may differ from those intended for wheels from Volkswagen genuine parts.*
>
> *Therefore, always observe the torque settings for the wheel bolts as well as the respective fitting and operating instructions.*

1.1 Lupo 3L, Type 6E from model year 1999 through model year 2006

Attachment to parts certificate 1903/05

Type Approval No.: e1*98/14*0114*00 through e1*98/14*0114*10

Type Approval No.: e1*2001/116*0114*11 through e1*2001/116*0114*14

Overview

Model engine output	Tyres	Tyre size	Wheel	Off-set in mm	Snow chains	Remarks
1.2l 45 kW	Standard tyres	155/65 R 14 75S	4 J x 14 ⇒ page 54	35	Yes	General notes on winter tyres
		155/65 R 14 75S	$4^1/_2$ J x 14 ⇒ page 54	38	Yes	

Volkswagen AG does not guarantee or accept any liability with respect to the correctness of information in this document. Copyright by Volkswagen AG.
Protected by copyright. Copying for private or commercial purposes, in part or in whole, is not permitted unless authorised by Volkswagen AG.
satelettronica

Model engine output	Tyres	Tyre size	Wheel	Off-set in mm	Snow chains	Remarks
		155/65 R 14 75S	5 J x 14 ⇒ page 55	40	Yes	Tyre makes recommended by Volkswagen: ♦ Summer tyres ⇒ page 361 ♦ Winter tyres ⇒ page 386
	Modification	No changes are permissible apart from the standard wheel and tyre combinations!				
	Winter tyres	155/65 R 14 75Q/T	5 J x 14 ⇒ page 55	40	Yes	

Tyre pressures can be found on the inside of the fuel tank flap or in ⇒ Maintenance ; Booklet 13.1 .

1.2 Wheel allocation for Lupo 3L, Type 6E from model year 1999 through model year 2006

Explanation of information on wheels

Torque specifications for wheel bolts ⇒ Running gear, axles, steering - Lupo 3 L, Lupo FSI, Lupo GTI; Rep. gr. 44 ; Torque specifications for wheel bolts

Pitch circle diameter	100 mm
Number of wheel bolt holes:	4

1.2.1 4 J x 14

Caution

Observe the allocation of wheels and tyres to the respective engines, which are listed in the overview table ⇒ page 53 .

6E0 601 025 - Wheel and tyre combination ⇒ page 53

Size:	4 J x 14
Wheel offset in mm:	35
Wheel load in kg:	400

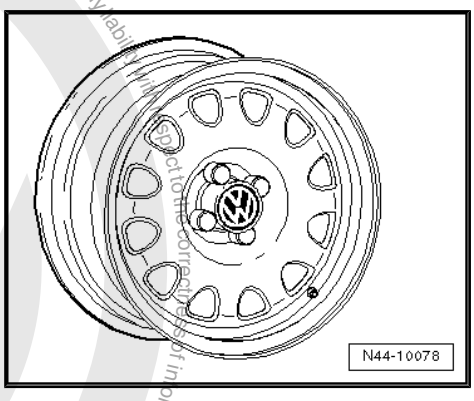

1.2.2 4½ J x 14

Caution

Observe the allocation of wheels and tyres to the respective engines, which are listed in the overview table ⇒ page 53 .

satelettronica

6E0 601 025 D - Wheel and tyre combination ⇒ page 53

Size:	$4^1/_2$ J x 14
Wheel offset in mm:	38
Wheel load in kg:	400

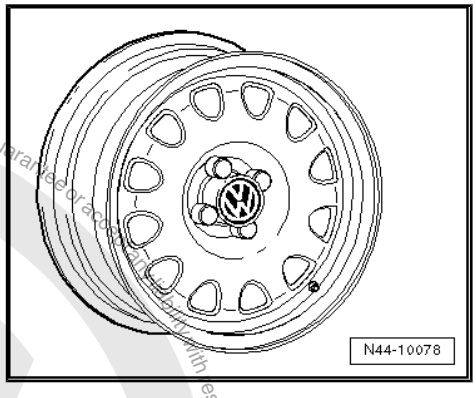

1.2.3 5 J x 14

Caution

Observe the allocation of wheels and tyres to the respective engines, which are listed in the overview table ⇒ page 53 *.*

6E0 601 027 A - Wheel and tyre combination ⇒ page 54

Size:	5 J x 14
Wheel offset in mm:	40
Wheel load in kg:	420

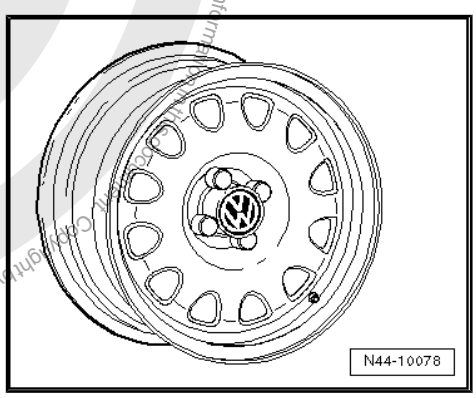

1.3 Lupo FSI, type 6E from model year 2001 through model year 2006

Attachment to parts certificate 1903/05

Type Approval No.: e1*98/14*0114*05 through e1*98/14*0114*10

Type Approval No.: e1*2001/116*0114*11 through e1*2001/116*0114*13

Overview

Model engine output	Tyres	Tyre size	Wheel	Off-set in mm	Snow chains	Remarks
1.4l 77 kW	Standard tyres	175/60 R 14 79H	5 J x 14 ⇒ page 56	38	Yes* ⇒ page 55	* Snow chains: Only the listed snow chains are approved! Article No. ⇒ page 56
	Modification	185/55 R 14 80H/V	6 J x 14 ⇒ page 57	43	No	General notes on winter tyres

Protected by copyright. Copying for private or commercial purposes, in part or in whole, is not permitted unless authorised by Volkswagen AG. Volkswagen AG does not guarantee or accept any liability with respect to the correctness of information. Copyright by Volkswagen AG.

satelettronica

Model engine output	Tyres	Tyre size	Wheel	Off-set in mm	Snow chains	Remarks
	Winter tyres	155/65 R 14 75S	5 J x 14 ⇒ page 56	40	Yes	Tyre makes recommended by Volkswagen: ♦ Summer tyres ⇒ page 361 ♦ Winter tyres ⇒ page 386

Tyre pressures can be found on the inside of the fuel tank flap or in ⇒ Maintenance ; Booklet 13.1 .

The snow chains listed below are permitted only in conjunction with the wheel and tyre combinations listed next to them!

Chain manufacturer Article No.	Accessories part No.	Tyre size	Wheel	Part No.
Rud 4414437	000 091 386 A	175/60 R 14 79H	5 J x 14 ET 38	6E0 601 025 F
Ottinger 100 458	Z 091 300			

1.4 Wheel allocation for Lupo FSI, type 6E from model year 2001 through model year 2006

Explanation of information on wheels

Torque specifications for wheel bolts ⇒ Running gear, axles, steering - Lupo 3 L, Lupo FSI, Lupo GTI; Rep. gr. 44 ; Torque specifications for wheel bolts

Pitch circle diameter	100 mm
Number of wheel bolt holes:	4

1.4.1 5 J x 14

Caution

Observe the allocation of wheels and tyres to the respective engines, which are listed in the overview table ⇒ page 55 .

6E0 601 025 F - Wheel and tyre combination ⇒ page 55

Size:	5 J x 14
Wheel offset in mm:	38
Wheel load in kg:	400

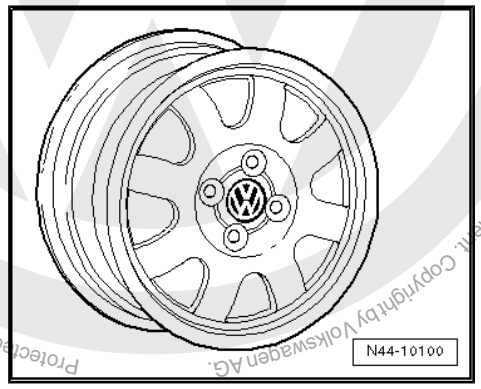

Protected by copyright. Copying for private or commercial purposes, in part or in whole, is not permitted unless authorised by Volkswagen AG. Volkswagen AG does not guarantee or accept any liability with respect to the correctness of information in this document. Copyright by Volkswagen AG.
satelettronica

6E0 601 027 A - Wheel and tyre combination ⇒ page 56

Size:	5 J x 14
Wheel offset in mm:	40
Wheel load in kg:	420

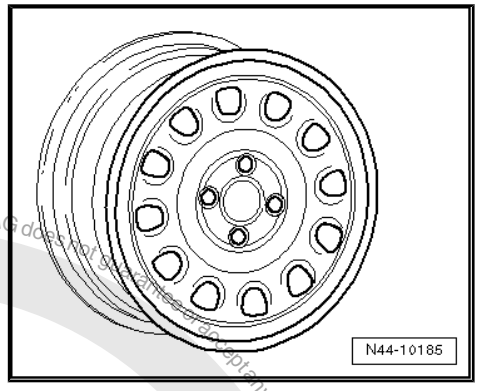

1.4.2 6 J x 14

Caution

Observe the allocation of wheels and tyres to the respective engines, which are listed in the overview table *⇒ page 55* *.*

1H0 601 027 A - Wheel and tyre combination ⇒ page 55

Size:	6 J x 14
Wheel offset in mm:	43
Wheel load in kg:	500

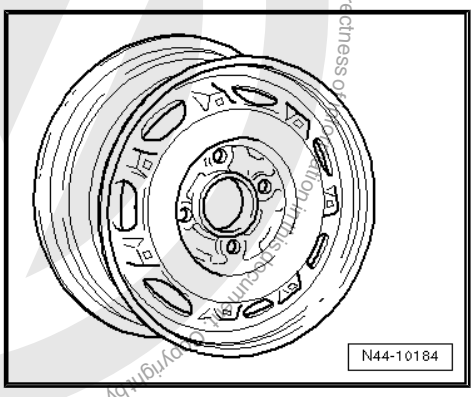

6X0 601 025 - Wheel and tyre combination ⇒ page 55

Size:	6 J x 14
Wheel offset in mm:	43
Wheel load in kg:	415

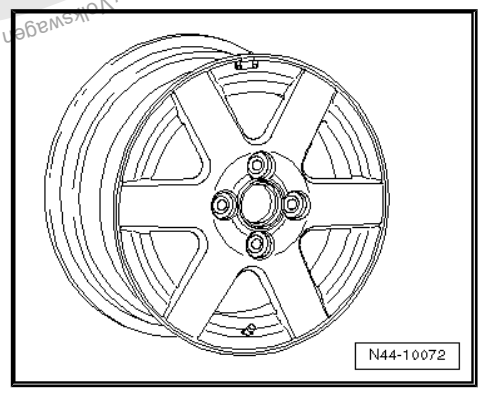

6X0 601 025 A - Wheel and tyre combination ⇒ page 55

Size:	6 J x 14
Wheel offset in mm:	43
Wheel load in kg:	425

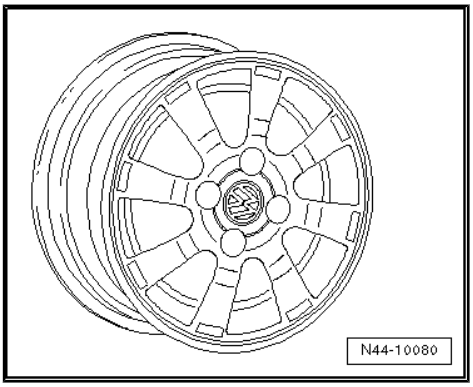

Protected by copyright. Copying for private or commercial purposes, in part or whole, is not permitted unless authorised by Volkswagen AG. Volkswagen AG does not guarantee or accept any liability with respect to the correctness of information in this document. Copyright by Volkswagen AG.
satelettronica

6X0 601 025 D - Wheel and tyre combination ⇒ page 55

Size:	6 J x 14
Wheel offset in mm:	43
Wheel load in kg:	475

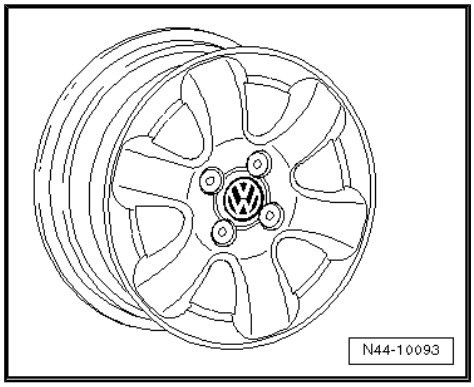

6N0 601 025 D - Wheel and tyre combination ⇒ page 55

Size:	6 J x 14
Wheel offset in mm:	43
Wheel load in kg:	425

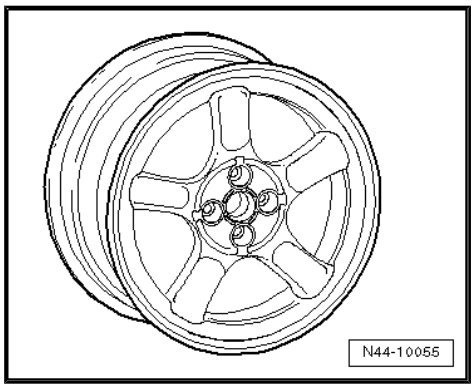

1.5 Lupo GTI, type 6ES from model year 2001 through model year 2006

Attachment to parts certificate 1903/05

Type Approval No. e1*98/14*0147*00 through e1*98/14*0147*03

Type Approval No.: e1*2001/116*0147*04 through e1*2001/116*0147*08

Overview

Model engine output	Tyres	Tyre size	Wheel	Off-set in mm	Snow chains	Remarks
1.6l 92 kW	Standard tyres	185/55 R 14 80V	6 J x 14 ⇒ page 59	43	Yes	Snow chains: Only the listed snow chains are approved! Article No. ⇒ page 59
	Standard tyres from model year 2003	205/45 R 15 81V	6 1/2 J x 15 ⇒ page 60	43	No	General notes on winter tyres
	Modification	205/45 R 15 81V	6 1/2 J x 15 ⇒ page 60	43	No	Tyre makes recommended by Volkswagen: ◆ Summer tyres ⇒ page 361 ◆ Winter tyres ⇒ page 386
	Winter tyres	185/55 R 14 80T	6 J x 14 ⇒ page 59	43	Yes	

Tyre pressures can be found on the inside of the fuel tank flap or in ⇒ Maintenance ; Booklet 13.1 .

Protected by copyright. Copying for private or commercial purposes, in part or in whole, is not permitted unless authorised by Volkswagen AG. Volkswagen AG does not guarantee or accept any liability with respect to the correctness of information in this document. Copyright by Volkswagen AG.

satelettronica

The snow chains listed below are permitted only in conjunction with the wheel and tyre combinations listed next to them!

Chain manufacturer Article No.	Accessories part No.	Tyre size	Wheel	Part No.
Rud 4414437	000 091 386 A	185/55 R 14 80V/T	6 J x 14 ET 43	6X0 601 027 A
Ottinger 100 458	Z 091 300			

1.6 Wheel allocation for Lupo GTI, type 6ES from model year 2001 through model year 2006

Explanation of information on wheels

Torque specifications for wheel bolts ⇒ Running gear, axles, steering - Lupo 3 L, Lupo FSI, Lupo GTI; Rep. gr. 44 ; Torque specifications for wheel bolts

Pitch circle diameter	100 mm
Number of wheel bolt holes:	4

1.6.1 6 J x 14

Caution

Observe the allocation of wheels and tyres to the respective engines, which are listed in the overview table ⇒ page 58 .

1H0 601 027 A - Wheel and tyre combination ⇒ page 58

Size:	6 J x 14
Wheel offset in mm:	43
Wheel load in kg:	500

Winter wheel

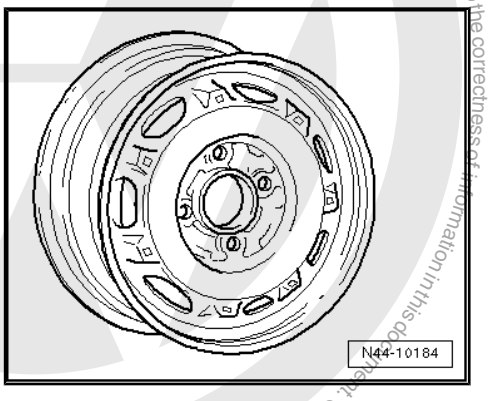

6X0 601 027 A - Wheel and tyre combination ⇒ page 58

Size:	6 J x 14
Wheel offset in mm:	43
Wheel load in kg:	475

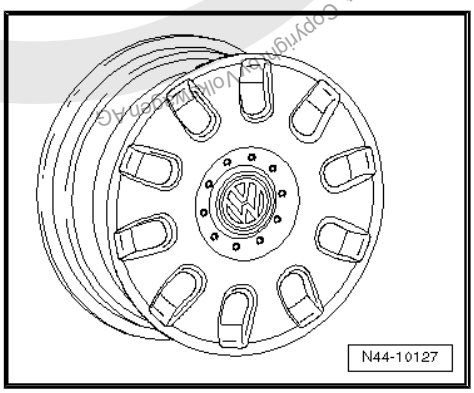

Protected by copyright. Copyright by Volkswagen AG. Volkswagen AG does not guarantee or accept any liability with respect to the correctness of information in this document. Copying for private or commercial purposes, in part or in whole, is not permitted unless authorised by Volkswagen AG.
satelettronica

Protected by copyright. Copying for private or commercial purposes, in part or in whole, is not permitted unless authorised by Volkswagen AG. Volkswagen AG does not guarantee or accept any liability with respect to the correctness of information in this document. Copyright by Volkswagen AG.

1.6.2 6$^1/_2$ J x 15

Caution

Observe the allocation of wheels and tyres to the respective engines, which are listed in the overview table ⇒ page 58 *.*

6E0 601 025 A - Wheel and tyre combination ⇒ page 58

Size:	6$^1/_2$ J x 15
Wheel offset in mm:	43
Wheel load in kg:	400

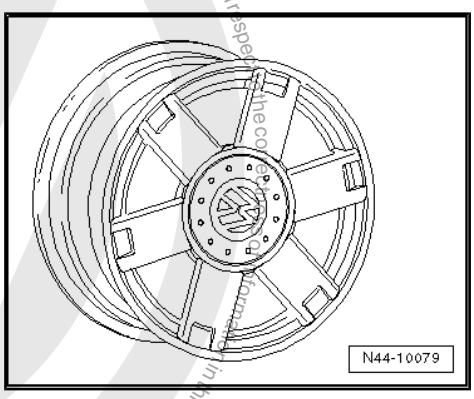

6E0 601 025 E - Wheel and tyre combination ⇒ page 58

Size:	6$^1/_2$ J x 15
Wheel offset in mm:	43
Wheel load in kg:	400

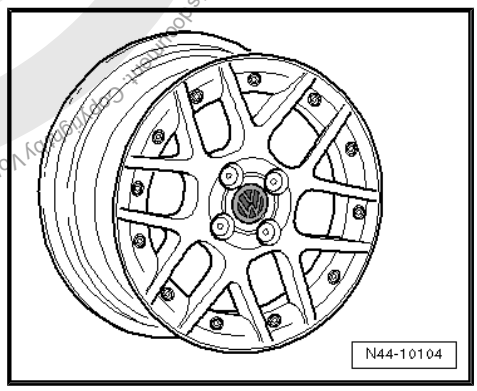

satelettronica

2 Lupo from model year 1999 through model year 2005

General

Volkswagen vehicles are built according to the latest findings in safety engineering. To keep it that way, we recommend the use of genuine Volkswagen spare parts only. You can recognise this by the VW Audi logo and by the part number. It has been established that these parts are reliable, safe and suitable.

Despite constant appraisal of the market, we cannot assess other products on these points, even when in isolated cases they have been passed by official inspectors or have been granted official approval. Therefore, we cannot, of course, assume any liability if these products are installed.

> ⚠ **WARNING**
>
> *The products from Volkswagen genuine parts and Votex genuine accessories may differ in fitting requirements, torque specifications and so on.*
>
> *Always follow the respective fitting and operating instructions.*

The wheel and tyre combinations or changes listed in the vehicle tables refer exclusively to Volkswagen Genuine wheels. Approval of wheel and tyre combinations or a change to wheels from the accessories trade is not possible with the parts certificate attached here.

> ⚠ **WARNING**
>
> *The fitting instructions and torque specifications for wheels from Votex genuine accessories may differ from those intended for wheels from Volkswagen genuine parts.*
>
> *Therefore, always observe the torque settings for the wheel bolts as well as the respective fitting and operating instructions.*

2.1 Lupo, type 6X from model year 1999 through model year 2005

Attachment to parts certificate 1903/05

Type Approval No.: e1*97/27*0085*00 to e1*97/27*0085*02

Type Approval No.: e1*98/14*0085*03 to e1*98/14*0085*13

Type Approval No.: e1*2001/116*0085*14 through e1*2001/116*0085*17

Overview

Model engine output	Tyres	Tyre size	Wheel	Off-set in mm	Snow chains	Remarks
37 kW , 44 kW petrol engine without air conditioning	Standard tyres	155/70 R 13 75S	$4^1/_2$ J x 13 ⇒ page 63	35	Yes	Tyres 185/55 R 14 or 195/45 R 15 are permitted only on vehicles with PAS
	Modification	175/65 R 13 80S/T	$5^1/_2$ J x 13 ⇒ page 64	43	Yes	

satelettronica

Model engine output	Tyres	Tyre size	Wheel	Off-set in mm	Snow chains	Remarks
		185/55 R 14 79T	6 J x 14 ⇒ page 65	43	Yes	
		185/55 R 14 79H	6 J x 14 ⇒ page 65	43	Yes	
		195/45 R 15 78H/V	6 J x 15 ⇒ page 67	43/45	Yes	
	Winter tyres	155/70 R 13 75Q	4 1/2 J x 13 ⇒ page 63	35	Yes	General notes on winter tyres
37 kWwith air conditioning; 44 kW petrol an diesel engines; 55 kW petrol engines with automatic gearboxes	Standard tyres	175/65 R 13 80S	5 1/2 J x 13 ⇒ page 64	43	Yes	Tyre makes recommended by Volkswagen: ♦ Summer tyres ⇒ page 361 ♦ All-season tyres ⇒ page 380 ♦ Winter tyres ⇒ page 386
	Modification	175/65 R 13 80T	5 1/2 J x 13 ⇒ page 64	43	Yes	
		185/55 R 14 79T	6 J x 14 ⇒ page 65	43	Yes	
		185/55 R 14 79H	6 J x 14 ⇒ page 65	43	Yes	
		195/45 R 15 78H	6 J x 15 ⇒ page 67	43/45	No	
	Winter tyres	175/65 R 13 80Q	5 1/2 J x 13 ⇒ page 64	43	Yes	
55 kW petrol engine with manual gearbox	Standard tyres	175/65 R 13 80T	5 1/2 J x 13 ⇒ page 64	43	Yes	
	Modification	185/55 R 14 79T	6 J x 14 ⇒ page 65	43	Yes	
		185/55 R 14 79H	6 J x 14 ⇒ page 65	43	Yes	
		195/45 R 15 78H	6 J x 15 ⇒ page 67	43/45	No	
	Winter tyres	175/65 R 13 80Q	5 1/2 J x 13 ⇒ page 64	43	Yes	
55 kW TDI; 74 kW 16V	Standard tyres	185/55 R 14 79/80H	6 J x 14 ⇒ page 65	43	Yes	Snow chains:
	Modification	195/45 R 15 78H/V	6 J x 15 ⇒ page 67	43/45	No	Only the snow chains listed are permitted! Article No. ⇒ page 63

Protected by copyright. Copying for private or commercial purposes, in part or in whole, is not permitted unless authorised by Volkswagen AG. Volkswagen AG does not guarantee or accept any liability with respect to the correctness of information in this document. Copyright by Volkswagen AG.

satelettronica

Model engine output	Tyres	Tyre size	Wheel	Off-set in mm	Snow chains	Remarks
	Winter tyres	185/55 R 14 79T	6 J x 14 ⇒ page 65	43	Yes	

Tyre pressures can be found on the inside of the fuel tank flap or in ⇒ Maintenance ; Booklet 13.1 .

Snow chains approved for Lupo 55 kW TDI and 74 kW 16 V

The snow chains listed below are permitted only in conjunction with the wheel and tyre combinations listed next to them!

Chain manufacturer Article No.	Accessories part No.	Tyre size	Wheel	Part No.
Rud 4414437	000 091 386 A	185/55 R 14 79/80H/T	6 J x 14 ET 43	1H0 601 027 A
Ottinger 100 458	Z 091 300			

2.2 Wheel allocation for Lupo, type 6X from model year 1999 through model year 2005

Explanation of information on wheels

Wheel bolt torque settings ⇒ Running gear, axles, steering; Rep. gr. 44 ; Wheel bolt torque settings

Pitch circle diameter 100 mm

Number of wheel bolt holes: 4

2.2.1 4 1/2 J x 13

Caution

Observe the allocation of wheels and tyres to the respective engines, which are listed in the overview table ⇒ page 61 .

For 37 kW and 44 kW petrol engines without air conditioning

6N0 601 025 E - Wheel and tyre combination ⇒ page 61

Size:	4 1/2 J x 13
Wheel offset in mm:	35
Wheel load in kg:	390

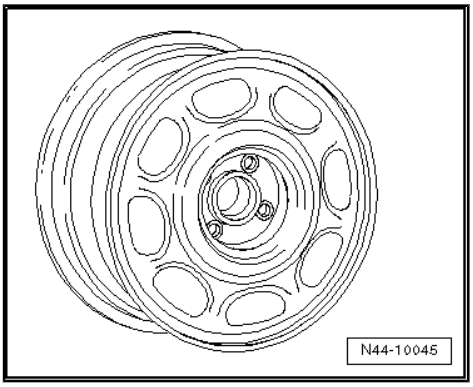

Protected by copyright. Copying for private or commercial purposes, in part or in whole is not permitted unless authorised by Volkswagen AG. Volkswagen AG does not guarantee or accept any liability with respect to the correctness of information in this document. Copyright by Volkswagen AG.

satelettronica

6N0 601 027 C - Wheel and tyre combination ⇒ page 61

Size:	$4^1/_2$ J x 13
Wheel offset in mm:	35
Wheel load in kg:	425

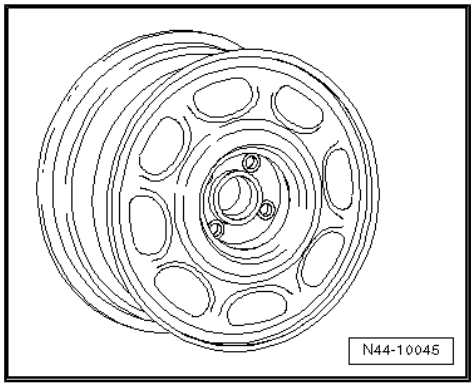

2.2.2 $5^1/_2$ J x 13

Caution

Observe the allocation of wheels and tyres to the respective engines, which are listed in the overview table ⇒ page 61 *.*

For all 37 kW, 44 kW and 55 kW petrol and 44 kW diesel engines

6N0 601 025 A - Wheel and tyre combination ⇒ page 61

Size:	$5^1/_2$ J x 13
Wheel offset in mm:	43
Wheel load in kg:	415

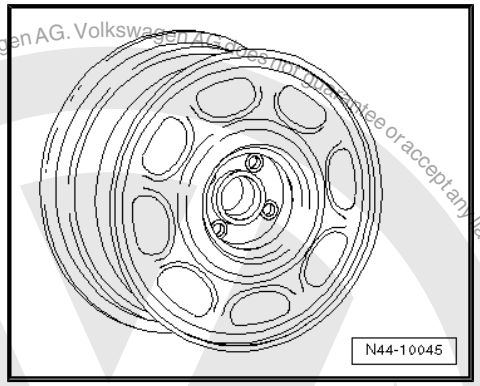

6N0 601 027 D - Wheel and tyre combination ⇒ page 61

Size:	$5^1/_2$ J x 13
Wheel offset in mm:	43
Wheel load in kg:	415

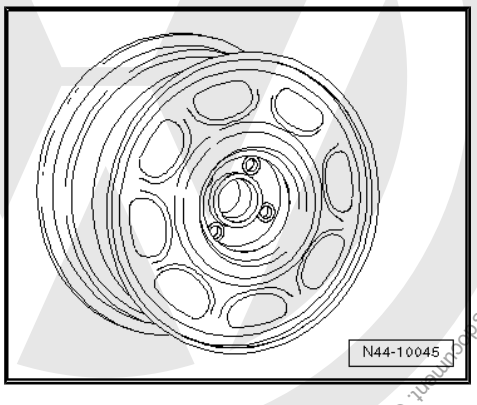

Protected by copyright. Copyright for private or commercial purposes, in part or in whole, is not permitted unless authorised by Volkswagen AG. Volkswagen AG does not guarantee or accept any liability with respect to the correctness of information in this document. Copyright by Volkswagen AG.
satelettronica

6N0 601 025 C - Wheel and tyre combination ⇒ page 61

Size:	$5^1/_2$ J x 13
Wheel offset in mm:	43
Wheel load in kg:	425

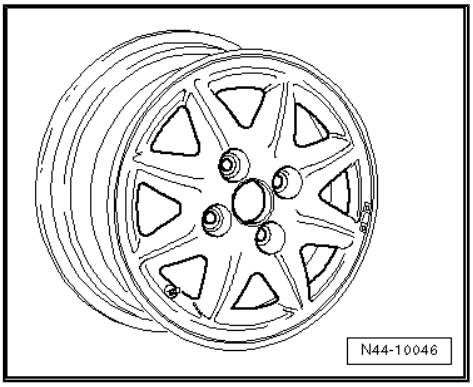

2.2.3 6 J x 14

Caution

Observe the allocation of wheels and tyres to the respective engines, which are listed in the overview table *⇒ page 61* *.*

For all vehicles with power steering

6X0 601 025 - Wheel and tyre combination ⇒ page 62

Size:	6 J x 14
Wheel offset in mm:	43
Wheel load in kg:	415

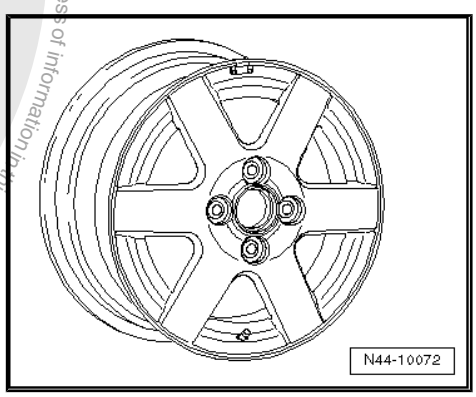

6X0 601 025 D - Wheel and tyre combination ⇒ page 62

Size:	6 J x 14
Wheel offset in mm:	43
Wheel load in kg:	425

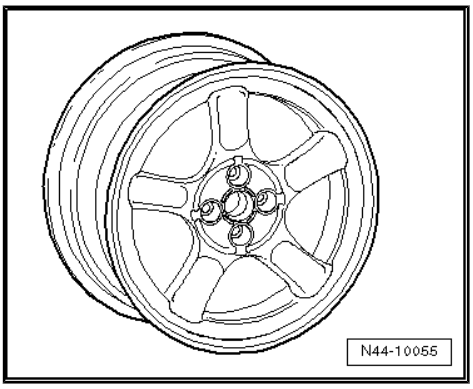

Protected by copyright. Copying for private and commercial purposes, in part or in whole, is not permitted unless authorised by Volkswagen AG. Volkswagen AG does not guarantee or accept any liability with respect to the correctness of information in this document. Copyright by Volkswagen AG.
satelettronica

Protected by copyright. Copying for private or commercial purposes, in part or in whole, is not permitted unless authorised by Volkswagen AG. Volkswagen AG does not guarantee or accept any liability with respect to the correctness of information in this document. Copyright by Volkswagen AG.

1H0 601 027 A - Wheel and tyre combination ⇒ page 62

Size:	6 J x 14
Wheel offset in mm:	43
Wheel load in kg:	500

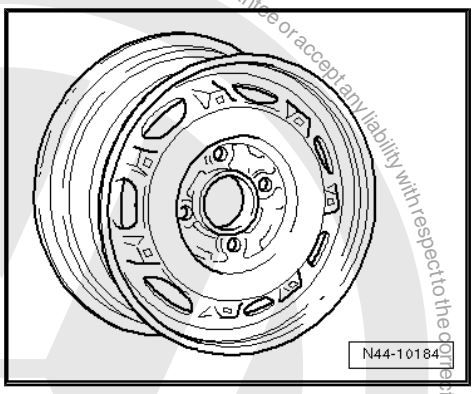

6X0 601 025 A - Wheel and tyre combination ⇒ page 62

Size:	6 J x 14
Wheel offset in mm:	43
Wheel load in kg:	425

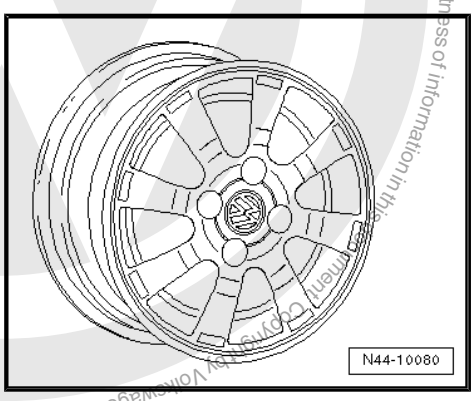

6X0 601 025 D - Wheel and tyre combination ⇒ page 62

Size:	6 J x 14
Wheel offset in mm:	43
Wheel load in kg:	475

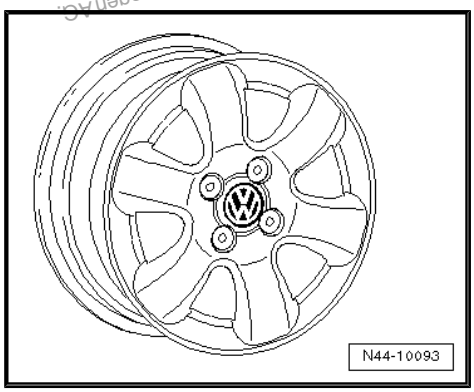

6X0 601 027 A - Wheel and tyre combination ⇒ page 62

Size:	6 J x 14
Wheel offset in mm:	43
Wheel load in kg:	475

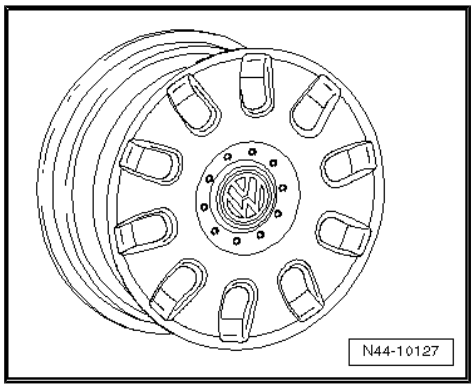

satelettronica

6X0 601 025 F - Wheel and tyre combination ⇒ page 62

Size:	6 J x 14
Wheel offset in mm:	43
Wheel load in kg:	420

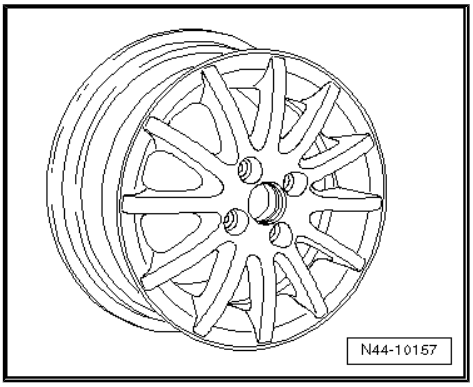

6X0 601 025 G - Wheel and tyre combination ⇒ page 62

Size:	6 J x 14
Wheel offset in mm:	43
Wheel load in kg:	475

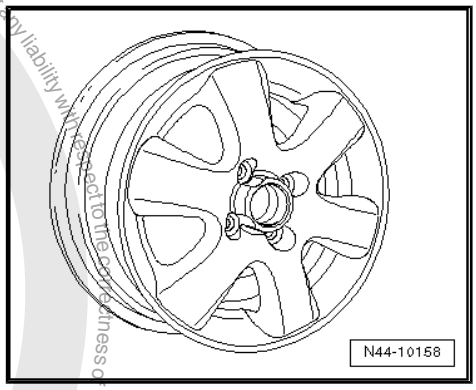

2.2.4 6 J x 15

Caution

Observe the allocation of wheels and tyres to the respective engines, which are listed in the overview table *⇒ page 61* *.*

For all vehicles with power steering

1H0 601 025 AD - Wheel and tyre combination ⇒ page 62

Size:	6 J x 15
Wheel offset in mm:	45
Wheel load in kg:	460

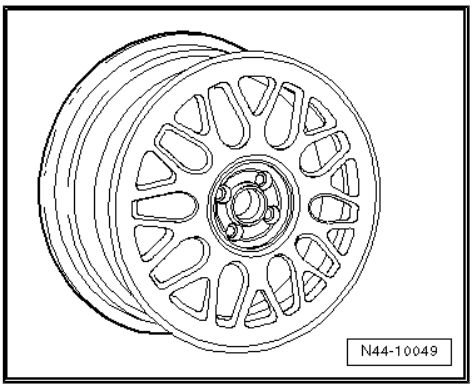

Copyright by Volkswagen AG. Volkswagen AG does not guarantee or accept any liability with respect to the correctness of information in this document. Copyright by Volkswagen AG. Reproduced by permission of Volkswagen AG. Copyright. Copying for private, commercial purposes, in part or in whole, is not permitted unless authorised by Volkswagen AG.

satelettronica

6N0 601 025 H - Wheel and tyre combination ⇒ page 62

Size:	6 J x 15
Wheel offset in mm:	45
Wheel load in kg:	420

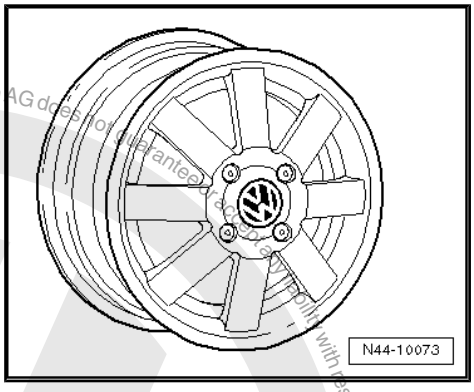

6X0 601 025 C - Wheel and tyre combination ⇒ page 62

Size:	6 J x 15
Wheel offset in mm:	43
Wheel load in kg:	475

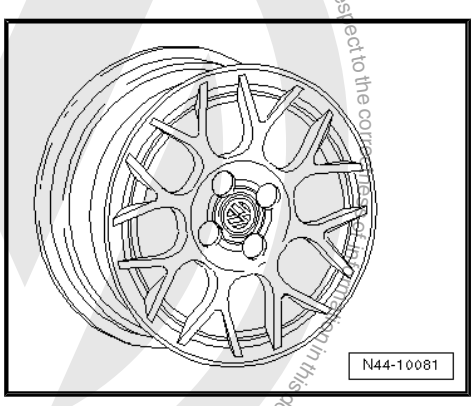

6N0 601 025 J - Wheel and tyre combination ⇒ page 62

Size:	6 J x 15
Wheel offset in mm:	45
Wheel load in kg:	425

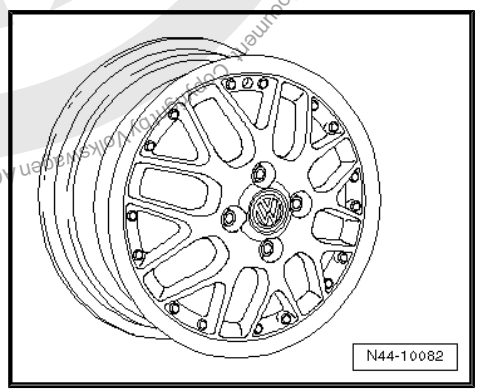

6X0 601 025 E - Wheel and tyre combination ⇒ page 62

Size:	6 J x 15
Wheel offset in mm:	43
Wheel load in kg:	475

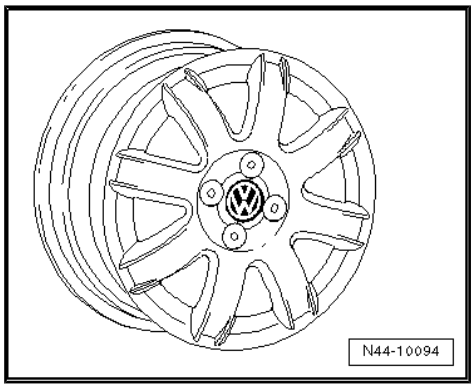

Protected by copyright. Copying for private or commercial purposes, in part or in whole, is not permitted unless authorised by Volkswagen AG. Volkswagen AG does not guarantee or accept any liability with respect to the correctness of information in this document. Copyright by Volkswagen AG.

satelettronica

3 Fox model year 2006

General

Volkswagen vehicles are built according to the latest findings in safety engineering. To keep it that way, we recommend the use of genuine Volkswagen spare parts only. You can recognise this by the VW Audi logo and by the part number. It has been established that these parts are reliable, safe and suitable.

Despite constant appraisal of the market, we cannot assess other products on these points, even when in isolated cases they have been passed by official inspectors or have been granted official approval. Therefore, we cannot, of course, assume any liability if these products are installed.

> **WARNING**
>
> *The products from Volkswagen genuine parts and Votex genuine accessories may differ in fitting requirements, torque specifications and so on.*
>
> *Always follow the respective fitting and operating instructions.*

The wheel and tyre combinations or changes listed in the vehicle tables refer exclusively to Volkswagen Genuine wheels. Approval of wheel and tyre combinations or a change to wheels from the accessories trade is not possible with the parts certificate attached here.

> **WARNING**
>
> *The fitting instructions and torque specifications for wheels from Votex genuine accessories may differ from those intended for wheels from Volkswagen genuine parts.*
>
> *Therefore, always observe the torque settings for the wheel bolts as well as the respective fitting and operating instructions.*

Protected by copyright. Copying for private or commercial purposes, in part or whole, is not permitted unless authorised by Volkswagen AG. Volkswagen AG does not guarantee or accept any liability with respect to the correctness of information in this document. Copyright by Volkswagen AG.

3.1 Fox, type 5Z model year 2006

Attachment to parts certificate 1826/05

Type Approval No.: e1*2001/116*0301*00 through e1*2001/116*0301*01

Overview

Model engine output	Tyres	Tyre size	Wheel	Off-set in mm	Snow chains	Remarks
1.2l 40 kW petrol engine without power steering	Standard tyres	165/70 R 14 81T	5 J x 14 ⇒ page 70	35	Yes	General notes on winter tyres
	Modification	No changes are permissible apart from the standard wheel and tyre combinations!				
	Winter tyres	165/70 R 14 81Q	5 J x 14 ⇒ page 70	35	Yes	Tyre makes recommended by Volkswagen:

satelettronica

Model engine output	Tyres	Tyre size	Wheel	Off-set in mm	Snow chains	Remarks
1.2l 40 kW petrol engine with PAS 1.4l 55 kW petrol engine	Standard tyres	165/70 R 14 81T	5 J x 14 ⇒ page 70	35	Yes	♦ Summer tyres ⇒ page 361 ♦ Winter tyres ⇒ page 386
	Modification	185/60 R 14 82H	6 J x 14 ⇒ page 71	43	Yes	
		195/55 R 15 85V	6 J x 15 ⇒ page 72	43	No	
	Winter tyres	165/70 R 14 81Q	5 J x 14 ⇒ page 70	35	Yes	
1.4l 51 kW diesel engine	Standard tyres	185/60 R 14 82H	6 J x 14 ⇒ page 71	43	Yes	
	Modification	165/70 R 14 81T	5 J x 14 ⇒ page 70	35	Yes	
		195/55 R 15 85V	6 J x 15 ⇒ page 72	43	No	
	Winter tyres	165/70 R 14 81Q	5 J x 14 ⇒ page 70	35	Yes	
		185/60 R 14 82Q	6 J x 14 ⇒ page 71	43	Yes	

Tyre pressures can be found on the inside of the fuel tank flap or in ⇒ Maintenance ; Booklet .

3.2 Wheel allocation Fox, type 5Z model year 2006

Explanation of information on wheels

Torque specifications for wheel bolts ⇒ Running gear, axles, steering; Rep. gr. 44 ; Fitting wheels and tyres; Fitting wheels

Pitch circle diameter	100 mm
Number of wheel bolt holes:	5

3.2.1 5 J x 14

Caution

Observe the allocation of wheels and tyres to the respective engines, which are listed in the overview table ⇒ page 69 .

satelettronica

6Q0 601 027 H - Wheel and tyre combination ⇒ page 69

Size:	5 J x 14
Wheel offset in mm:	35
Wheel load in kg:	455

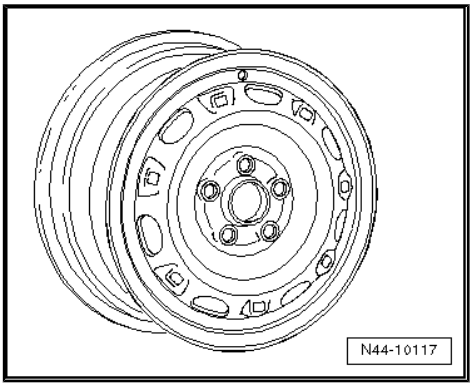

3.2.2 6 J x 14

Caution

Observe the allocation of wheels and tyres to the respective engines, which are listed in the overview table *⇒ page 69* *.*

For 1.2l 40 kW with PAS, 1.4l 55 kW, 1.4 51 kW diesel

6Q0 601 027 F - Wheel and tyre combination ⇒ page 70

Size:	6 J x 14
Wheel offset in mm:	43
Wheel load in kg:	465

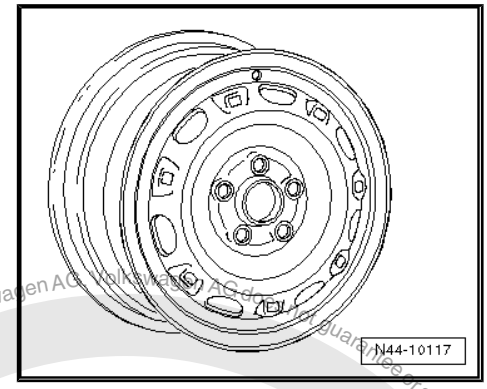

5Z0 601 025 - Wheel and tyre combination ⇒ page 70

Size:	6 J x 14
Wheel offset in mm:	43
Wheel load in kg:	460

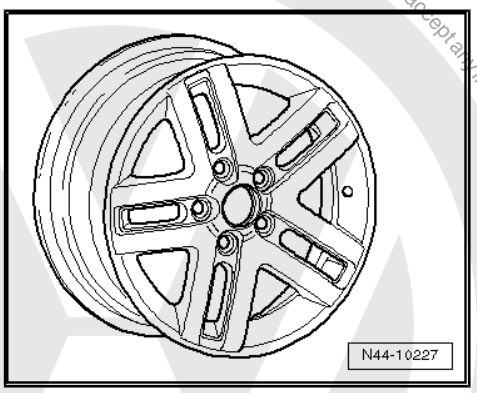

satelettronica
Protected by copyright. Copying for private or commercial purposes, in part or in whole, is not permitted unless authorised by Volkswagen AG. Volkswagen AG does not guarantee or accept any liability with respect to the correctness of information in this document. Copyright by Volkswagen AG.

5Z0 601 025 C - Wheel and tyre combination ⇒ page 70

Size:	6 J x 14
Wheel offset in mm:	43
Wheel load in kg:	460

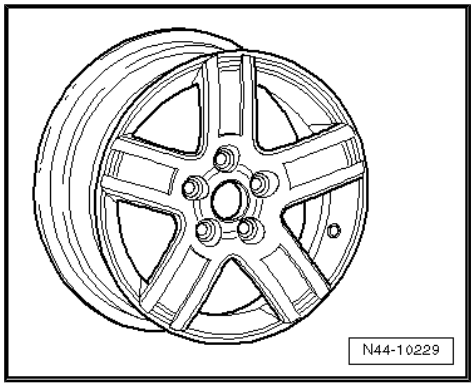

5Z0 601 025 E - Wheel and tyre combination ⇒ page 70

Size:	6 J x 14
Wheel offset in mm:	43
Wheel load in kg:	460

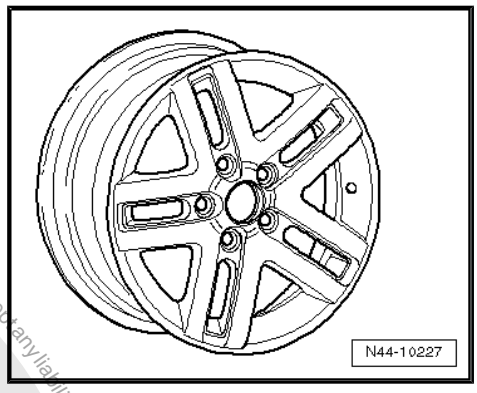

6Q0 601 025 Q - Wheel and tyre combination ⇒ page 70

Size:	6 J x 14
Wheel offset in mm:	43
Wheel load in kg:	465

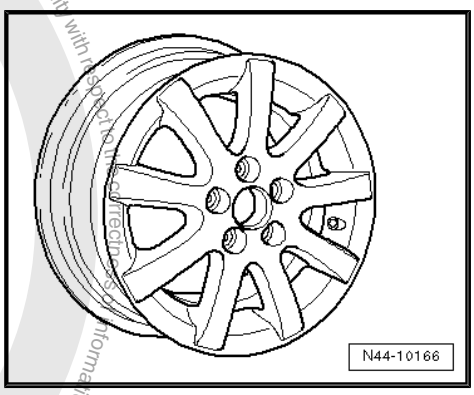

6Q0 601 025 K - Wheel and tyre combination ⇒ page 70

Size:	6 J x 14
Wheel offset in mm:	43
Wheel load in kg:	465

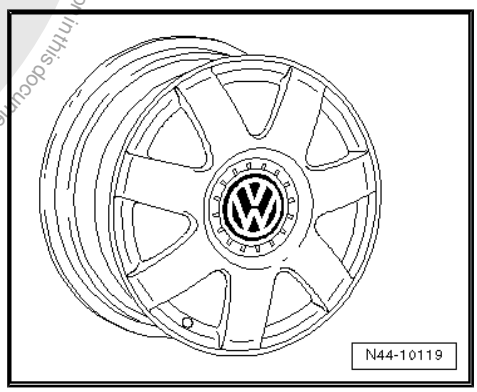

3.2.3 6 J x 15

Caution

Observe the allocation of wheels and tyres to the respective engines, which are listed in the overview table *⇒ page 69* *.*

Protected by copyright. Copyright by Volkswagen AG.
Copyright by Volkswagen AG. Volkswagen AG does not guarantee or accept any liability with respect to the correctness of information in this document. Copying for private or commercial purposes, in part or in whole, is not permitted unless authorised by Volkswagen AG.
satelettronica

For 1.2l 40 kW with PAS, 1.4l 55 kW, 1.4 51 kW diesel

6Q0 601 027 G - Wheel and tyre combination ⇒ page 70

Size:	6 J x 15
Wheel offset in mm:	43
Wheel load in kg:	475

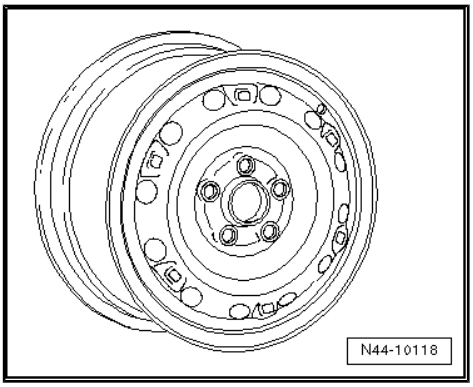

5Z0 601 025 A - Wheel and tyre combination ⇒ page 70

Size:	6 J x 15
Wheel offset in mm:	43
Wheel load in kg:	475

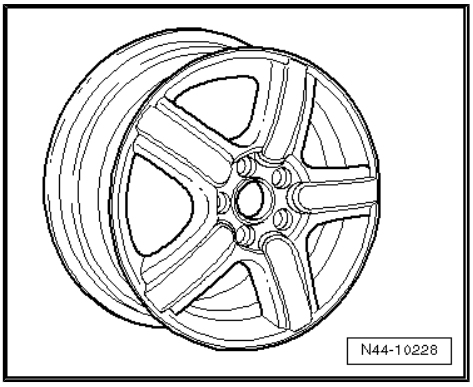

5Z0 601 025 D - Wheel and tyre combination ⇒ page 70

Size:	6 J x 15
Wheel offset in mm:	43
Wheel load in kg:	475

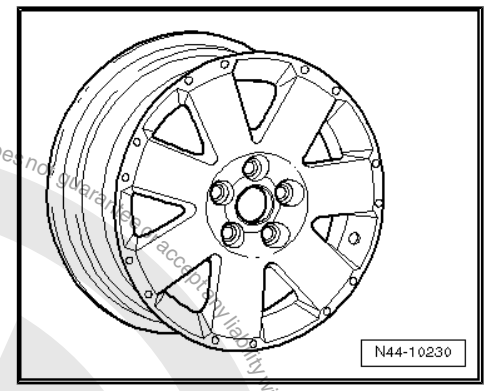

6Q0 601 025 L - Wheel and tyre combination ⇒ page 70

Size:	6 J x 15
Wheel offset in mm:	43
Wheel load in kg:	475

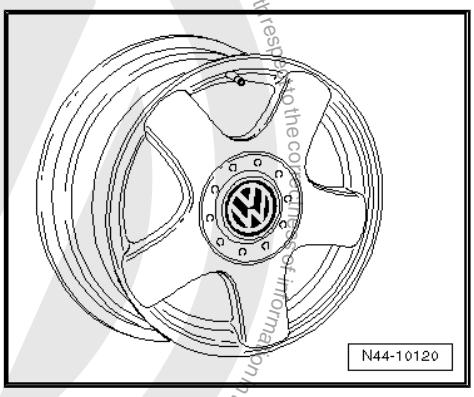

Protected by copyright. Copying for private or commercial purposes, in part or in whole is not permitted unless authorised by Volkswagen AG. Volkswagen AG does not guarantee or accept any liability with respect to the correctness of information in this document. Copyright by Volkswagen AG.
satelettronica

4 Polo model year 1995 through model year 2002

General

Volkswagen vehicles are built according to the latest findings in safety engineering. To keep it that way, we recommend the use of genuine Volkswagen spare parts only. You can recognise this by the VW Audi logo and by the part number. It has been established that these parts are reliable, safe and suitable.

Despite constant appraisal of the market, we cannot assess other products on these points, even when in isolated cases they have been passed by official inspectors or have been granted official approval. Therefore, we cannot, of course, assume any liability if these products are installed.

> ⚠ WARNING
>
> *The products from Volkswagen genuine parts and Votex genuine accessories may differ in fitting requirements, torque specifications and so on.*
>
> *Always follow the respective fitting and operating instructions.*

The wheel and tyre combinations or changes listed in the vehicle tables refer exclusively to Volkswagen Genuine wheels. Approval of wheel and tyre combinations or a change to wheels from the accessories trade is not possible with the parts certificate attached here.

> ⚠ WARNING
>
> *The fitting instructions and torque specifications for wheels from Votex genuine accessories may differ from those intended for wheels from Volkswagen genuine parts.*
>
> *Therefore, always observe the torque settings for the wheel bolts as well as the respective fitting and operating instructions.*

4.1 Polo, type 6N through 07.95

Appendix 2 to Parts Certificate 1461/02

General type approval No. G 774

Overview

Model engine output	Tyres	Tyre size	Wheel	Offset in mm	Snow chains	Remarks
33, 37, 40, 44 kW with manual gearbox without air conditioning	Standard tyres	155/70 R 13 75S/T	$4^1/_2$ J x 13 ⇒ page 75	35	Yes	If the speed rating „S“ does not already appear in the vehicle documentation, it must be entered.
		175/65 R 13 80S/T	$5^1/_2$ J x 13 ⇒ page 76	43	Yes	
	Modification	No changes are permissible apart from the standard wheel and tyre combinations!				General notes on winter tyres

... authorised by Volkswagen AG. Volkswagen AG does not guarantee or accept any liability with respect to the correctness of information in this document. Copyright by Volkswagen AG.

Model engine output	Tyres	Tyre size	Wheel	Off-set in mm	Snow chains	Remarks
	Winter tyres	155/70 R 13 75Q	$4^1/_2$ J x 13 ⇒ page 75	35	Yes	Tyre makes recommended by Volkswagen: ◆ Summer tyres ⇒ page 362 ◆ All-season tyres ⇒ page 380 ◆ Winter tyres ⇒ page 387
40, 44 kW with air conditioning and/ or automatic gearbox,	Standard tyres	175/65 R 13 80S/T	$5^1/_2$ J x 13 ⇒ page 76	43	Yes	
55 kW petrol engine, 47 kW diesel engine	Modification	No changes are permissible apart from the standard wheel and tyre combinations!				
	Winter tyres	175/65 R 13 80Q	$5^1/_2$ J x 13 ⇒ page 76	43	Yes	

Tyre pressures can be found on the inside of the fuel tank flap or in ⇒ Maintenance ; Booklet 28 .

4.2 Wheel allocation for Polo, type 6N through 07.95

Explanation of information on wheels

Tightening torques for wheel bolts ⇒ Running gear, axles, steering; Rep. gr. 40 ; Repairing front wheel suspension; II - Assembly overview - wheel bearing, suspension

Pitch circle diameter	100 mm
Number of wheel bolt holes:	4

4.2.1 $4^1/_2$ J x 13

Caution

Observe the allocation of wheels and tyres to the respective engines, which are listed in the overview table ⇒ page 74 .

For 33, 37, 40, 44 kW vehicles with manual gearbox, without air conditioning

6N0 601 025 E - Wheel and tyre combination ⇒ page 74

Size:	$4^1/_2$ J x 13
Wheel offset in mm:	35
Wheel load in kg:	390

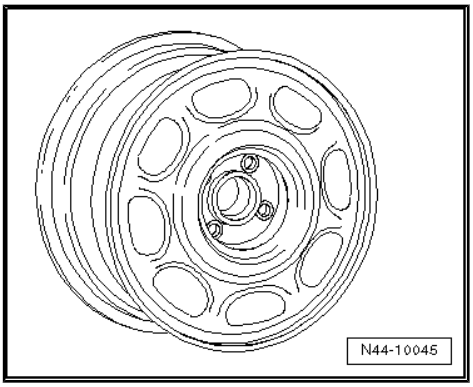

Volkswagen AG, Volkswagen AG does not guarantee or accept any liability with respect to the correctness of information in this document. Copyright by Volkswagen AG. Copyright. Copying for private or commercial purposes, in part or in whole, is not permitted unless authorised by Volkswagen AG.

satelettronica

6N0 601 027 C - Wheel and tyre combination ⇒ page 74

Size:	$4^{1}/_{2}$ J x 13
Wheel offset in mm:	35
Wheel load in kg:	425

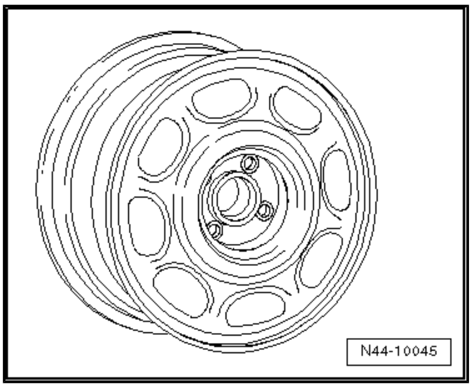

4.2.2 $5^{1}/_{2}$ J x 13

> ⚠ **Caution**
>
> *Observe the allocation of wheels and tyres to the respective engines, which are listed in the overview table* *⇒ page 74* *.*

For vehicles through 55 kW petrol engines with or without PAS

6N0 601 025 A - allocation ⇒ page 74

Size:	$5^{1}/_{2}$ J x 13
Wheel offset in mm:	43
Wheel load in kg:	415

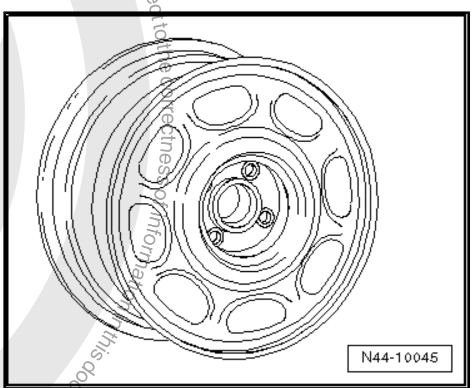

6N0 601 027 D - allocation ⇒ page 74

Size:	$5^{1}/_{2}$ J x 13
Wheel offset in mm:	43
Wheel load in kg:	425

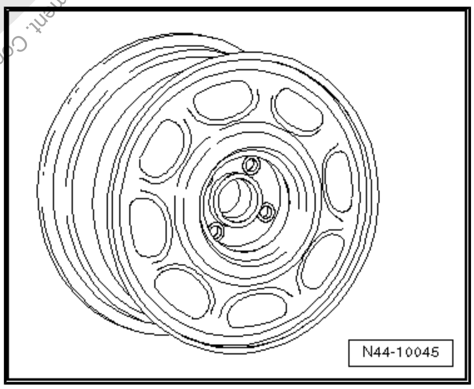

4.3 Polo, type 6N from 08.95 through model year 1996

Appendix 2 to Parts Certificate 1461/02

Protected by copyright. Copying for private or commercial purposes, in part or in whole, is not permitted unless authorised by Volkswagen AG. Volkswagen AG does not guarantee or accept any liability with respect to the correctness of information in this document. Copyright by Volkswagen AG.

sateletronica

General type approval No. G 774

Overview

Model engine output	Tyres	Tyre size	Wheel	Off-set in mm	Snow chains	Remarks
33, 37, 40, 44 kW with manual gear-box without air con-ditioning	Standard tyres	155/70 R 13 75S/T	$4^1/_2$ J x 13 ⇒ page 79	35	Yes	
		175/65 R 13 80S/T	$5^1/_2$ J x 13 ⇒ page 80	43	Yes	
	Modifica-tion	185/55 R 14 78S	6 J x 14 ⇒ page 80	43	No	Tyres 185/55 R 14 or 195/45 R 15 are permitted only on vehicles with PAS
		195/45 R 15 78S	6 J x 15 ⇒ page 82	45	No	General notes on winter tyres
	Winter tyres	155/70 R 13 75Q	$4^1/_2$ J x 13 ⇒ page 79	35	Yes	Tyre makes recom-mended by Volks-wagen:
40, 44 kW with air conditioning and/or automatic gearbox,	Standard tyres	175/65 R 13 80S/T	$5^1/_2$ J x 13 ⇒ page 80	43	Yes	♦ Summer tyres ⇒ page 362 ♦ All-season tyres ⇒ page 380 ♦ Winter tyres ⇒ page 387
55 kW petrol en-gine; 47 kW diesel en-gine	Modifica-tion	185/55 R 14 78S	6 J x 14 ⇒ page 80	43	No	
		195/45 R 15 78S	6 J x 15 ⇒ page 82	45	No	
	Winter tyres	175/65 R 13 80Q	$5^1/_2$ J x 13 ⇒ page 80	43	Yes	
74 kW 16V	Standard tyres	185/55 R 14 78H	6 J x 14 ⇒ page 80	43	Yes	
	Modifica-tion	195/45 R 15 78H	6 J x 15 ⇒ page 82	43/ 45	No	
	Winter tyres	185/55 R 14 78T	6 J x 14 ⇒ page 80	43	Yes	

Tyre pressures can be found on the inside of the fuel tank flap or in ⇒ Maintenance ; Booklet 28 .

4.4 Polo, type 6N from model year 1997 through model year 1999

Appendix 2 to Parts Certificate 1461/02

Protected by copyright. Copyright by Volkswagen AG. Volkswagen AG does not guarantee or accept any liability with respect to the correctness of information in this document. Copyright by Volkswagen AG. Reproduction for commercial purposes, in part or in whole, is not permitted unless authorised by Volkswagen AG.
satelettronica

Type Approval No.: e1*96/79*0069*00 through e1*96/79*0069*05

Type Approval No.: e1*98/14*0069*06

Overview

Model engine output	Tyres	Tyre size	Wheel	Off-set in mm	Snow chains	Remarks
33, 37, 40, 44 kW with manual gear-box without air con-ditioning	Standard tyres	155/70 R 13 75S	$4^1/_2$ J x 13 ⇒ page 79	35	Yes	The 155/70 R 13 75S tyres are no longer permitted on vehi-cles with 44 kW from model year 1999!
Through model year 1998		175/65 R 13 80S	$5^1/_2$ J x 13 ⇒ page 80	43	Yes	Tyres 185/55 R 14 or 195/45 R 15 are permitted only on vehicles with PAS
	Modifica-tion	185/55 R 14 79S* ⇒ page 78	6 J x 14 ⇒ page 80	43	No	* Tyres with LI 78 are permitted on ve-hicles through mod-el year 1998!
		195/45 R 15 78S	6 J x 15 ⇒ page 82	43/ 45	No	General notes on winter tyres
	Winter tyres	155/70 R 13 75Q	$4^1/_2$ J x 13 ⇒ page 79	35	Yes	Tyre makes recom-mended by Volks-wagen: ◆ Summer tyres ⇒ page 362 ◆ All-season tyres ⇒ page 380 ◆ Winter tyres ⇒ page 387
40, 44 kW with air conditioning and/or automatic gearbox,	Standard tyres	175/65 R 13 80S	$5^1/_2$ J x 13 ⇒ page 80	43	Yes	
40, 44 kW from model year 1999; 55 kW petrol en-gine; 42, 44, 47 kW diesel engine	Modifica-tion	185/55 R 14 79S* ⇒ page 78	6 J x 14 ⇒ page 80	43	No	
		195/45 R 15 78S	6 J x 15 ⇒ page 82	43/ 45	No	
	Winter tyres	175/65 R 13 80Q	$5^1/_2$ J x 13 ⇒ page 80	43	Yes	
74 kW 16V	Standard tyres	185/55 R 14 78H	6 J x 14 ⇒ page 80	43	Yes	
	Modifica-tion	195/45 R 15 78H	6 J x 15 ⇒ page 82	43/ 45	No	
	Winter tyres	185/55 R 14 78T	6 J x 14 ⇒ page 80	43	Yes	
88 kW 16V	Standard tyres	185/55 R 14 79H	6 J x 14 ⇒ page 80	43	Yes	

Protected by copyright. Copying for private or commercial purposes, in part or in whole, is not permitted unless authorised by Volkswagen AG. Volkswagen AG does not guarantee or accept any liability with respect to the correctness of information in this document. Copyright by Volkswagen AG.

satelettronica

Model engine output	Tyres	Tyre size	Wheel	Off-set in mm	Snow chains	Remarks
	Modification	195/45 R 15 78H	6 J x 15 ⇒ page 82	43/45	No	
	Winter tyres	185/55 R 14 79T	6 J x 14 ⇒ page 80	43	Yes	

Tyre pressures can be found on the inside of the fuel tank flap or in ⇒ Maintenance ; Booklet 28 .

4.5 Wheel allocation Polo, type 6N from 08.95 through model year 1999

Explanation of information on wheels

Tightening torques for wheel bolts ⇒ Running gear, axles, steering; Rep. gr. 40 ; Repairing front wheel suspension; II - Assembly overview - wheel bearing, suspension

Pitch circle diameter	100 mm
Number of wheel bolt holes:	4

4.5.1 $4^1/_2$ J x 13

Caution

Observe wheel and tyre allocation for the respective engines, which are listed in the overview tables ⇒ page 77 (from 08.95 through model year 1996) and ⇒ page 78 (from model year 1997 through model year 1999).

For 33, 37, 40, 44 kW vehicles with manual gearbox, without air conditioning

6N0 601 025 E - allocation ⇒ page 77 (08.95 - 1996) or ⇒ page 78 (1997 - 1999)

Size:	$4^1/_2$ J x 13
Wheel offset in mm:	35
Wheel load in kg:	390

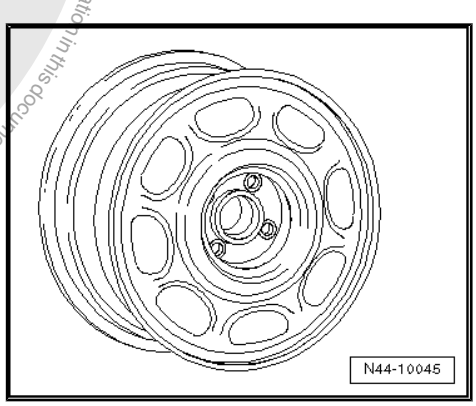

Protected by copyright. Copying for private and commercial purposes, in part or in whole, is not permitted unless authorised by Volkswagen AG. Volkswagen AG does not guarantee or accept any liability with respect to the correctness of information in this document. Copyright by Volkswagen AG.
satelettronica

6N0 601 027 C - allocation ⇒ page 77 (08.95 - 1996) or ⇒ page 78 (1997 - 1999)

Size:	$4^1/_2$ J x 13
Wheel offset in mm:	35
Wheel load in kg:	425

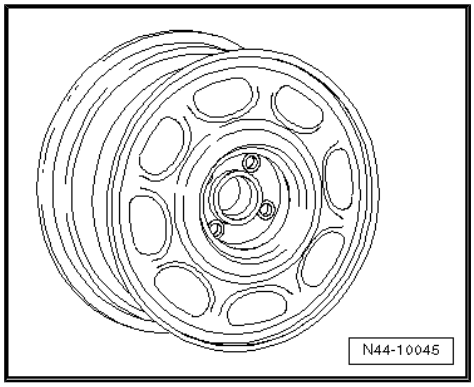

4.5.2 $5^1/_2$ J x 13

Caution

Observe wheel and tyre allocation for the respective engines, which are listed in the overview tables ⇒ page 77 (from 08.95 through model year 1996) and ⇒ page 78 (from model year 1997 through model year 1999).

For vehicles through 55 kW petrol engines with or without PAS

6N0 601 025 A - allocation ⇒ page 77 (08.95 - 1996) or ⇒ page 78 (1997 - 1999)

Size:	$5^1/_2$ J x 13
Wheel offset in mm:	43
Wheel load in kg:	415

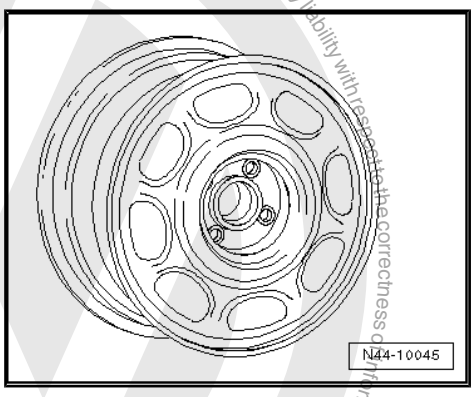

6N0 601 027 D - allocation ⇒ page 77 (08.95 - 1996) or ⇒ page 78 (1997 - 1999)

Size:	$5^1/_2$ J x 13
Wheel offset in mm:	43
Wheel load in kg:	425

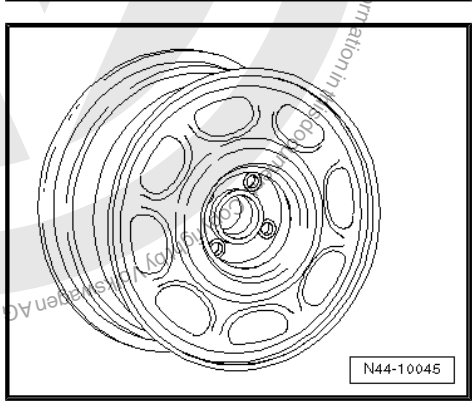

4.5.3 6 J x 14

Caution

Observe wheel and tyre allocation for the respective engines, which are listed in the overview tables ⇒ page 77 (from 08.95 through model year 1996) and ⇒ page 78 (from model year 1997 through model year 1999).

Protected by copyright. Copying for private or commercial purposes, in part or in whole, is not permitted unless authorised by Volkswagen AG. Volkswagen AG does not guarantee or accept any liability with respect to the correctness of information in this repair manual.
satelettronica

For all vehicles with power steering

6N0 601 025 D - allocation ⇒ page 77 (08.95 - 1996) or ⇒ page 78 (1997 - 1999)

Size:	6 J x 14
Wheel offset in mm:	43
Wheel load in kg:	415

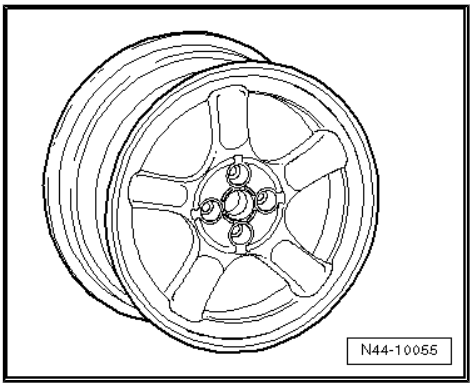

1H0 601 027 A - allocation ⇒ page 77 (08.95 - 1996) or ⇒ page 78 (1997 - 1999)

Size:	6 J x 14
Wheel offset in mm:	43
Wheel load in kg:	500

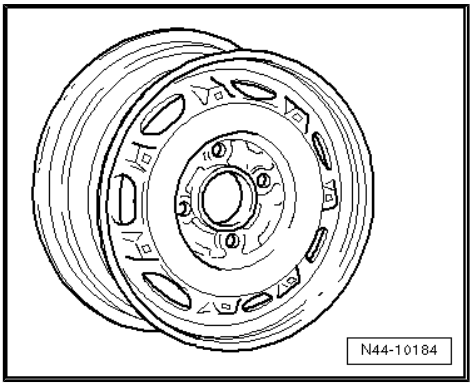

6X0 601 025 - allocation ⇒ page 77 (08.95 - 1996) or ⇒ page 78 (1997 - 1999)

Size:	6 J x 14
Wheel offset in mm:	43
Wheel load in kg:	415

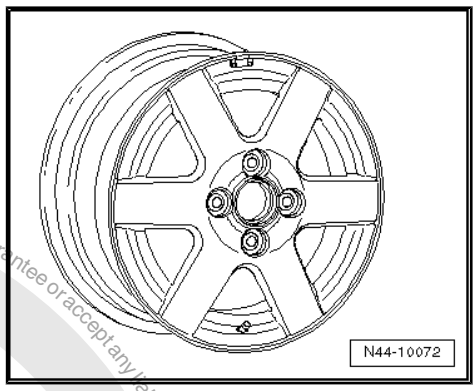

6X0 601 025 A - allocation ⇒ page 77 (08.95 - 1996) or ⇒ page 78 (1997 - 1999)

Size:	6 J x 14
Wheel offset in mm:	43
Wheel load in kg:	425

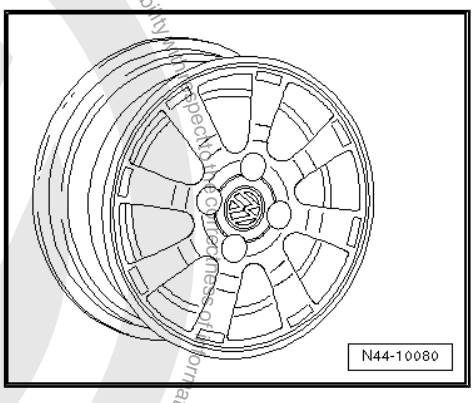

Protected by copyright. Copying for private or commercial purposes, in part or whole, is not permitted unless authorised by Volkswagen AG. Volkswagen AG does not guarantee or accept any liability with respect to the correctness of information in this document. Copyright by Volkswagen AG.
satelettronica

4.5.4 6 J x 15

Caution

Observe wheel and tyre allocation for the respective engines, which are listed in the overview tables ⇒ page 77 (from 08.95 through model year 1996) and ⇒ page 78 (from model year 1997 through model year 1999).

For all vehicles with power steering

1H0 601 025 AE - allocation ⇒ page 77 (08.95 - 1996) or ⇒ page 78 (1997 - 1999)

Size:	6 J x 15
Wheel offset in mm:	45
Wheel load in kg:	480

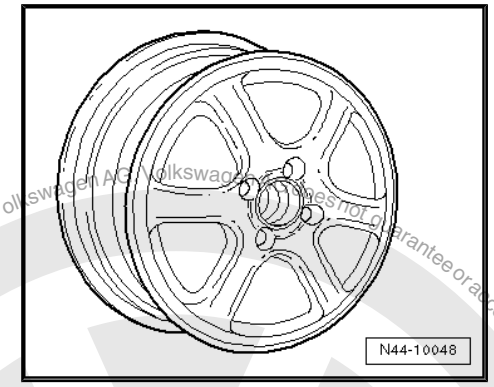

6N0 601 025 H - allocation ⇒ page 77 (08.95 - 1996) or ⇒ page 78 (1997 - 1999)

Size:	6 J x 15
Wheel offset in mm:	45
Wheel load in kg:	420

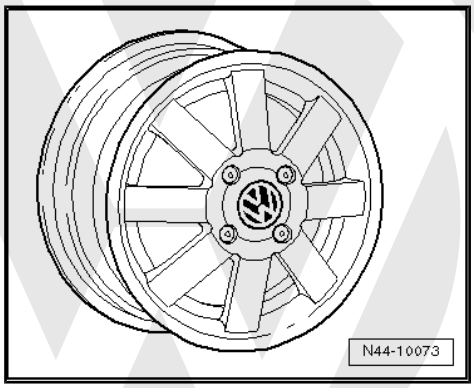

6N0 601 025 J - allocation ⇒ page 77 (08.95 - 1996) or ⇒ page 78 (1997 - 1999)

Size:	6 J x 15
Wheel offset in mm:	45
Wheel load in kg:	425

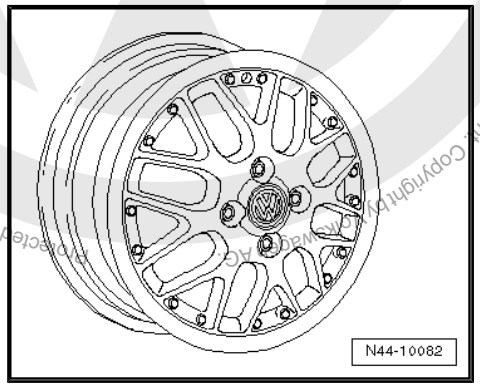

Copyright by Volkswagen AG. Volkswagen AG does not guarantee or accept any liability with respect to the correctness of information in this document. Copyright by Volkswagen AG. Protected by copyright. Copying for private or commercial purposes, in part or in whole, is not permitted unless authorised by Volkswagen AG.
satelettronica

1H0 601 025 AD - allocation ⇒ page 77 (08.95 - 1996) or ⇒ page 78 (1997 - 1999)

Size:	6 J x 15
Wheel offset in mm:	45
Wheel load in kg:	460

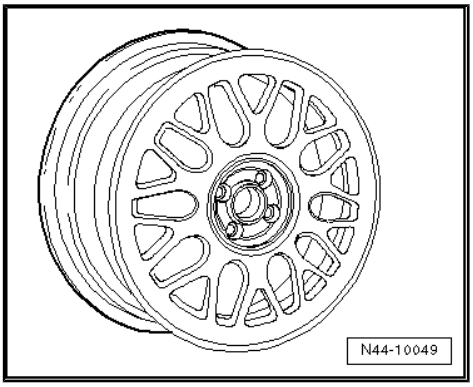

6X0 601 025 C - allocation ⇒ page 77 (08.95 - 1996) or ⇒ page 78 (1997 - 1999)

Size:	6 J x 15
Wheel offset in mm:	43
Wheel load in kg:	475

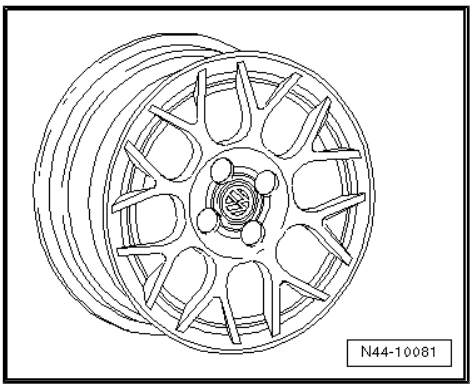

4.6 Polo, type 6N from model year 2000 through model year 2002

Appendix 2 to Parts Certificate 1461/02

Type Approval No. e1*98/14*0069*07 through e1*98/14*0069*11

Overview

Model engine output	Tyres	Tyre size	Wheel	Off-set in mm	Snow chains	Remarks
37 kW without air conditioning	Standard tyres	155/70 R 13 75S	$4^1/_2$ J x 13 ⇒ page 85	35	Yes	
	Modification	175/65 R 13 80S	$5^1/_2$ J x 13 ⇒ page 85	43	Yes	
		185/55 R 14 80H* ⇒ page 83	6 J x 14 ⇒ page 86	43	No	Tyres 185/55 R 14 or 195/45 R 15 are permitted only on vehicles with PAS
		195/45 R 15 78H	6 J x 15 ⇒ page 87	43/ 45	No	
	Winter tyres	155/70 R 13 75Q	$4^1/_2$ J x 13 ⇒ page 85	35	Yes	
37 kW with air conditioning; 40, 44 kW petrol engine;	Standard tyres	175/65 R 13 80S	$5^1/_2$ J x 13 ⇒ page 85	43	Yes	* Tyres with LI 79 are permitted on vehicles from model year 2001!

Protected by copyright. Copyright Volkswagen AG. Copying for private or commercial purposes, in part or in whole, is not permitted unless authorised by Volkswagen AG. Volkswagen AG does not guarantee or accept any liability with respect to the correctness of information in this document.

satelettronica

Protected by copyright. Copyright by Volkswagen AG. Copying for private or commercial purposes, in part or in whole, is not permitted unless authorised by Volkswagen AG. Volkswagen AG does not guarantee or accept any liability with respect to the correctness of information.

Model engine output	Tyres	Tyre size	Wheel	Off-set in mm	Snow chains	Remarks
42, 44, 47 kW diesel;	Modification	185/55 R 14 80H* ⇒ page 83	6 J x 14 ⇒ page 86	43	No	General notes on winter tyres
55 kW petrol engine with 13" brakes, brake disc diameter 239 mm with automatic gearbox		195/45 R 15 78H	6 J x 15 ⇒ page 87	43/45	No	
	Winter tyres	175/65 R 13 80Q	$5^1/_2$ J x 13 ⇒ page 85	43	Yes	Tyre makes recommended by Volkswagen: ◆ Summer tyres ⇒ page 362 ◆ All-season tyres ⇒ page 380 ◆ Winter tyres ⇒ page 387
55 kW petrol engine with 13" brakes, brake disc diameter 239 mm with manual gearbox	Standard tyres	175/65 R 13 80T	$5^1/_2$ J x 13 ⇒ page 85	43	Yes	
	Modification	185/55 R 14 80H* ⇒ page 83	6 J x 14 ⇒ page 86	43	No	
		195/45 R 15 78H	6 J x 15 ⇒ page 87	43/45	No	
	Winter tyres	175/65 R 13 80Q	$5^1/_2$ J x 13 ⇒ page 85	43	Yes	
55 kW petrol engine with 14" brakes, brake disc diameter 256 mm;	Standard tyres	185/55 R 14 80H* ⇒ page 83	6 J x 14 ⇒ page 86	43	Yes	
55 kW TDI;	Modification	195/45 R 15 78H	6 J x 15 ⇒ page 87	43/45	No	
74 kW 16V	Winter tyres	185/55 R 14 80T* ⇒ page 83	6 J x 14 ⇒ page 86	43	Yes	
92 kW 16V	Standard tyres	185/55 R 14 80V* ⇒ page 83	6 J x 14 ⇒ page 86	43	Yes	
	Modification	195/45 R 15 78V	6 J x 15 ⇒ page 87	43/45	No	
	Winter tyres	185/55 R 14 80T* ⇒ page 83	6 J x 14 ⇒ page 86	43	Yes	

Tyre pressures can be found on the inside of the fuel tank flap or in ⇒ Maintenance ; Booklet 28 .

satelettronica

4.7 Wheel assignment Polo, type 6N from model year 2000 through model year 2002

Explanation of information on wheels

Tightening torques for wheel bolts ⇒ Running gear, axles, steering; Rep. gr. 40 ; Repairing front wheel suspension; II - Assembly overview - wheel bearing, suspension

Pitch circle diameter	100 mm
Number of wheel bolt holes:	4

4.7.1 $4^1/_2$ J x 13

Caution

Observe the allocation of wheels and tyres to the respective engines, which are listed in the overview table ⇒ page 83 *.*

For 33, 37, 40, 44 kW vehicles with manual gearbox, without air conditioning

6N0 601 025 E - allocation ⇒ page 83

Size:	$4^1/_2$ J x 13
Wheel offset in mm:	35
Wheel load in kg:	390

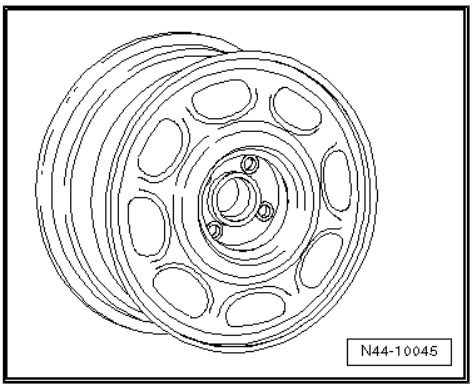

6N0 601 027 C - allocation ⇒ page 83

Size:	$4^1/_2$ J x 13
Wheel offset in mm:	35
Wheel load in kg:	425

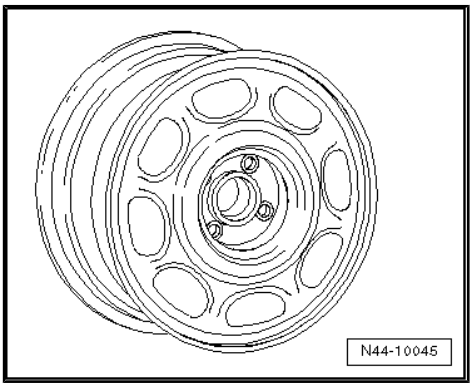

4.7.2 $5^1/_2$ J x 13

Caution

Observe the allocation of wheels and tyres to the respective engines, which are listed in the overview table ⇒ page 83 *.*

Protected by copyright. Copyright by Volkswagen AG. Volkswagen AG does not guarantee or accept any liability with respect to the correctness of information in this document. Copyright by Volkswagen AG. Copying for private or commercial purposes, in part or in whole, is not permitted unless authorised by Volkswagen AG.
satelettronica

For vehicles through with 55 kW petrol engines without ABS with 13" brakes with or without PAS

6N0 601 025 A - allocation ⇒ page 83

Size:	$5^1/_2$ J x 13
Wheel offset in mm:	43
Wheel load in kg:	415

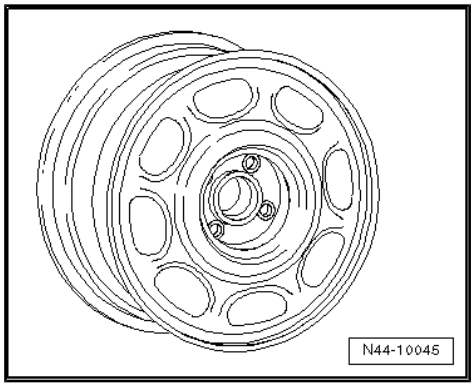

6N0 601 027 D - allocation ⇒ page 83

Size:	$5^1/_2$ J x 13
Wheel offset in mm:	43
Wheel load in kg:	425

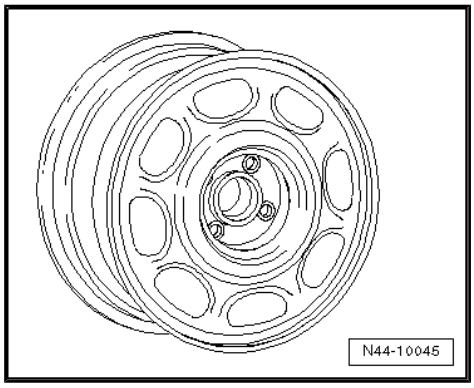

4.7.3 6 J x 14

Caution

Observe the allocation of wheels and tyres to the respective engines, which are listed in the overview table ⇒ page 83 *.*

For vehicles with maximum permitted axle load of 830 kg

6X0 601 025 - allocation ⇒ page 83

Size:	6 J x 14
Wheel offset in mm:	43
Wheel load in kg:	415

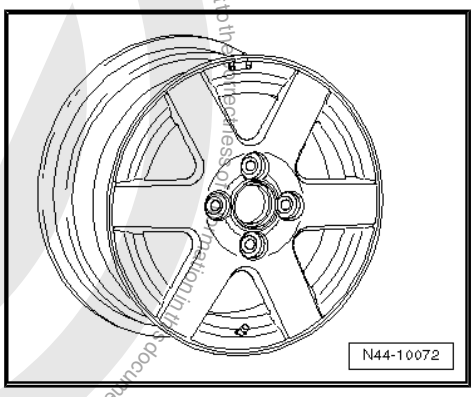

Protected by copyright. Copying for private or commercial purposes, in part or in whole, is not permitted unless authorised by Volkswagen AG. Volkswagen AG does not guarantee or accept any liability with respect to the correctness of information in this document. Copyright by Volkswagen AG.
satelettronica

6N0 601 025 D - allocation ⇒ page 83

Size:	6 J x 14
Wheel offset in mm:	43
Wheel load in kg:	415

For vehicles with maximum permitted axle load of 850 kg

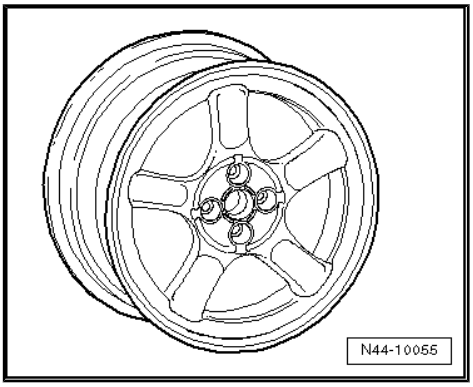

6X0 601 025 A - allocation ⇒ page 83

Size:	6 J x 14
Wheel offset in mm:	43
Wheel load in kg:	425

For all vehicles with power steering

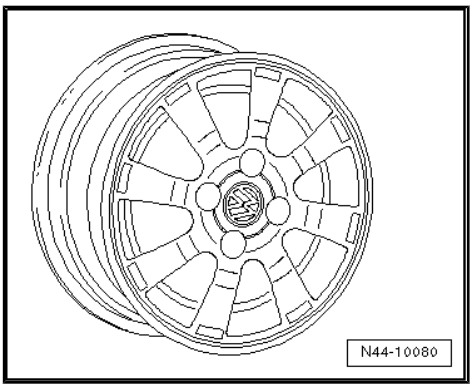

6X0 601 025 D - allocation ⇒ page 83

Size:	6 J x 14
Wheel offset in mm:	43
Wheel load in kg:	475

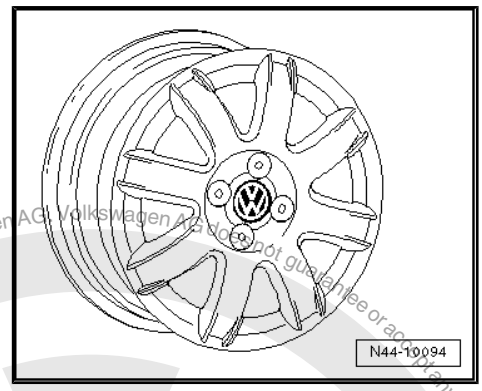

1H0 601 027 A - allocation ⇒ page 83

Size:	6 J x 14
Wheel offset in mm:	43
Wheel load in kg:	500

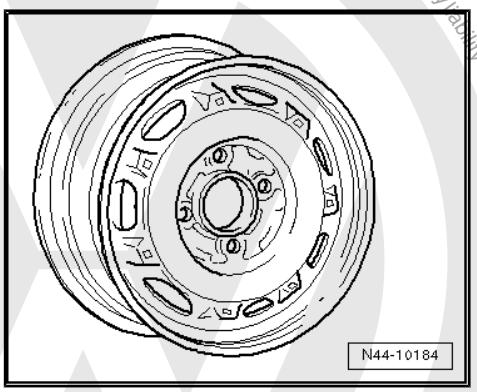

4.7.4 6 J x 15

Caution

Observe the allocation of wheels and tyres to the respective engines, which are listed in the overview table *⇒ page 83* *.*

satelettronica
Protected by copyright. Copyright by Volkswagen AG.
Copyright by Volkswagen AG, Volkswagen AG does not guarantee or accept any liability with respect to the correctness of information in this document.
Copying for private or commercial purposes, in part or in whole, is not permitted unless authorised by Volkswagen AG.

For vehicles with maximum permitted axle load of 840 kg

6N0 601 025 H - allocation ⇒ page 83

Size:	6 J x 15
Wheel offset in mm:	45
Wheel load in kg:	420

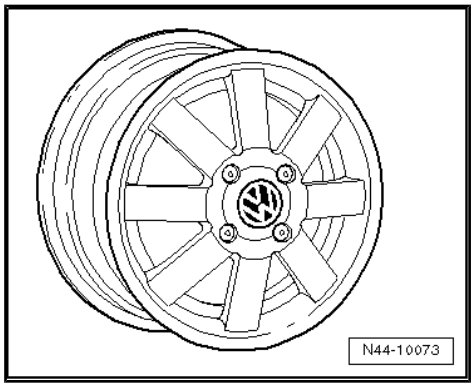

For vehicles with maximum permitted axle load of 850 kg

6N0 601 025 J - allocation ⇒ page 83

Size:	6 J x 15
Wheel offset in mm:	45
Wheel load in kg:	425

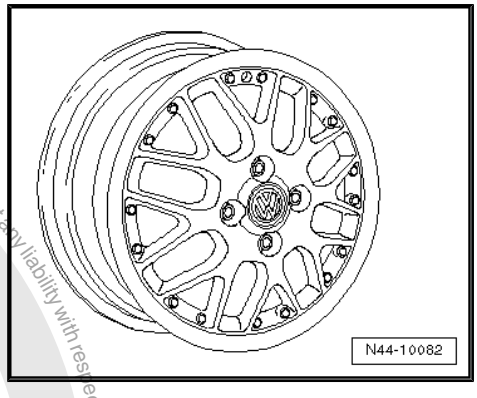

For all vehicles with power steering

1H0 601 025 AD - allocation ⇒ page 83

Size:	6 J x 15
Wheel offset in mm:	45
Wheel load in kg:	460

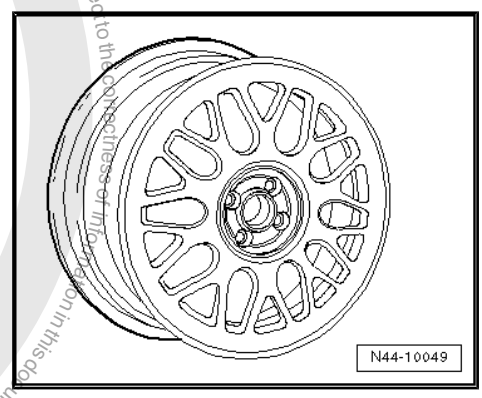

1H0 601 025 AE - allocation ⇒ page 83

Size:	6 J x 15
Wheel offset in mm:	45
Wheel load in kg:	480

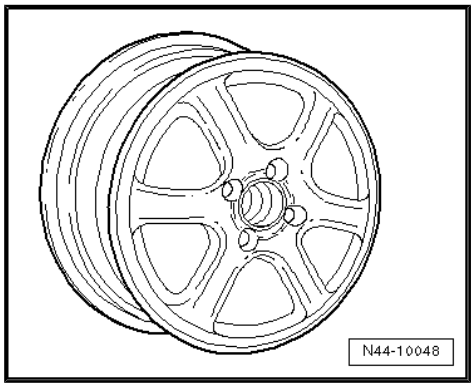

Protected by copyright. Copyright by Volkswagen AG.
Copyright of this document, or any part thereof, is not permitted without the authorised by Volkswagen AG. Volkswagen AG does not guarantee or accept any liability with respect to the correctness of information in this document.
satelettronica

6X0 601 025 C - allocation ⇒ page 83

Size:	6 J x 15
Wheel offset in mm:	43
Wheel load in kg:	475

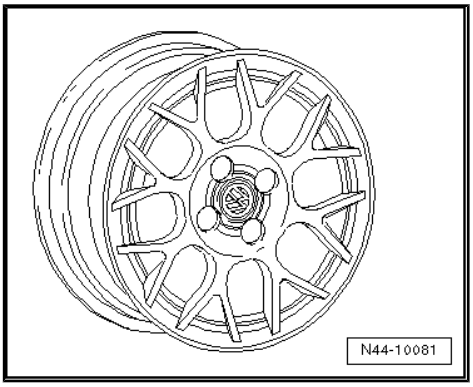

6X0 601 025 E - allocation ⇒ page 83

Size:	6 J x 15
Wheel offset in mm:	43
Wheel load in kg:	475

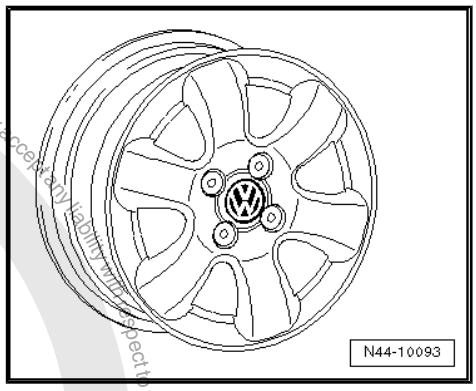

Protected by copyright. Copying for private or commercial purposes, in part or in whole, is not permitted unless authorised by Volkswagen AG. Volkswagen AG does not guarantee or accept any liability with respect to the correctness of information in this document. Copyright by Volkswagen AG.
satelettronica

5 Polo from model year 2002

General

Volkswagen vehicles are built according to the latest findings in safety engineering. To keep it that way, we recommend the use of genuine Volkswagen spare parts only. You can recognise this by the VW Audi logo and by the part number. It has been established that these parts are reliable, safe and suitable.

Despite constant appraisal of the market, we cannot assess other products on these points, even when in isolated cases they have been passed by official inspectors or have been granted official approval. Therefore, we cannot, of course, assume any liability if these products are installed.

> ⚠ **WARNING**
>
> *The products from Volkswagen genuine parts and Votex genuine accessories may differ in fitting requirements, torque specifications and so on.*
>
> *Always follow the respective fitting and operating instructions.*

The wheel and tyre combinations or changes listed in the vehicle tables refer exclusively to Volkswagen Genuine wheels. Approval of wheel and tyre combinations or a change to wheels from the accessories trade is not possible with the parts certificate attached here.

> ⚠ **WARNING**
>
> *The fitting instructions and torque specifications for wheels from Votex genuine accessories may differ from those intended for wheels from Volkswagen genuine parts.*
>
> *Therefore, always observe the torque settings for the wheel bolts as well as the respective fitting and operating instructions.*

5.1 Polo, type 9N from model year 2002 through model year 2006

Attachment to parts certificate 1900/05

Type Approval No. e1*98/14*0174*00 to e1*98/14*0174*04

Type Approval No.: e1*2001/116*0174*05 through e1*2001/116*0174*13

Overview

Model engine output	Tyres	Tyre size	Wheel	Off-set in mm	Snow chains	Remarks
1.2l 40 kW without PAS	Standard tyres	155/80 R 13 79S	5 J x 13 ⇒ page 92	35	Yes	
	Standard tyres from model year 2003	155/80 R 13 79T	5 J x 13 ⇒ page 92	35	Yes	
	Modification	No changes are permissible apart from the standard wheel and tyre combinations!				General notes on winter tyres

Protected by copyright. Copying, in part or in whole, is only permitted with the express consent of Volkswagen AG. Volkswagen AG does not guarantee or accept any liability with respect to the correctness of information in this document. Copyright by Volkswagen AG.
satelettronica

Model engine output	Tyres	Tyre size	Wheel	Off-set in mm	Snow chains	Remarks
	Winter tyres	155/80 R 13 79Q	5 J x 13 ⇒ page 92	35	Yes	Tyre makes recommended by Volkswagen: ◆ Summer tyres ⇒ page 363 ◆ All-season tyres ⇒ page 380 ◆ Winter tyres ⇒ page 387
1.2l 40 kW with PAS; 1.2l 47 kW; 1.4l 55 kW petrol engines;	Standard tyres	165/70 R 14 81T	5 J x 14 ⇒ page 93	35	Yes	
1.4l 51 kW; 1.4l 55 kW; 1.4l 59 kW; 1.9l 47 kW diesel engines	Modification	185/60 R 14 82T/H	6 J x 14 ⇒ page 93	43	Yes	
		185/55 R 15 82T/H	6 J x 15 ⇒ page 94	43	Yes	
		195/50 R 15 82H	6 J x 15 ⇒ page 94	43	No	
		195/55 R 15 85H/V	6 J x 15 ⇒ page 94	43	No	
		205/45 R 16 83V/W	$6^1/_2$ J x 16 ⇒ page 96	43	No	
	Winter tyres	165/70 R 14 81Q	5 J x 14 ⇒ page 93	35	Yes	
1.4l 63 kW	Standard tyres	195/55 R15 85V	6 J x 15 ⇒ page 94	43	No	
	Modification	165/70 R 14 81T	5 J x 14 ⇒ page 93	35	Yes	
		185/60 R 14 82T/H	6 J x 14 ⇒ page 93	43	Yes	
		185/55 R 15 82T/H	6 J x 15 ⇒ page 94	43	Yes	
		195/50 R 15 82H	6 J x 15 ⇒ page 94	43	No	
		195/55 R 15 85H/V	6 J x 15 ⇒ page 94	43	No	
		205/45 R 16 83V/W	$6^1/_2$ J x 16 ⇒ page 96	43	No	
	Winter tyres	185/55 R 15 82T/H	6 J x 15 ⇒ page 94	43	Yes	
		185/60 R 14 82Q	6 J x 14 ⇒ page 93	43	Yes	

Protected by copyright. Copying for private or commercial purposes, in part or in whole, is not permitted unless authorised by Volkswagen AG. Volkswagen AG does not guarantee or accept any liability with respect to the correctness of information in this document. Copyright by Volkswagen AG.

satelettronica

Model engine output	Tyres	Tyre size	Wheel	Off-set in mm	Snow chains	Remarks
1.4l 74 kW petrol engine	Standard tyres	185/60 R 14 82H	6 J x 14 ⇒ page 93	43	Yes	
1.9l 74 kW diesel engines	Modification	185/55 R 15 82H	6 J x 15 ⇒ page 94	43	Yes	
		195/50 R 15 82H/V	6 J x 15 ⇒ page 94	43	No	
		195/55 R 15 85H/V	6 J x 15 ⇒ page 94	43	No	
		205/45 R 16 83V/W	$6^1/_2$ J x 16 ⇒ page 96	43	No	
	Winter tyres	185/60 R 14 82Q	6 J x 14 ⇒ page 93	43	Yes	
1.9l 96 kW diesel engines	Standard tyres	195/55 R 15 85V	6 J x 15 ⇒ page 95	43	No	
	Modification	205/45 R 16 83W	$6^1/_2$ J x 16 ⇒ page 97	43	No	
	Winter tyres	185/55 R 15 86Q	6 J x 15 ⇒ page 95	43	Yes	

Tyre pressures can be found on the inside of the fuel tank flap or in ⇒ Maintenance ; Booklet 15.1 .

Protected by copyright. Copyright by Volkswagen AG. Volkswagen AG does not guarantee or accept any liability with respect to the correctness of information in this document. Copying for private or commercial purposes, in part or in whole, is not permitted unless authorised by Volkswagen AG.

5.2 Wheel allocation for Polo, type 9N from model year 2002 through model year 2006

Explanation of information on wheels

Torque specifications for wheel bolts ⇒ Running gear, axles, steering; Rep. gr. 44 ; Fitting wheels and tyres; Fitting wheels

Pitch circle diameter	100 mm
Number of wheel bolt holes:	5

5.2.1 5 J x 13

Caution

Observe the allocation of wheels and tyres to the respective engines, which are listed in the overview table ⇒ page 90 .

satelettronica

For 1.2l 40 kW without PAS

6Q0 601 027 E - Wheel and tyre combination ⇒ page 90

Size:	5 J x 13
Wheel offset in mm:	35
Wheel load in kg:	400

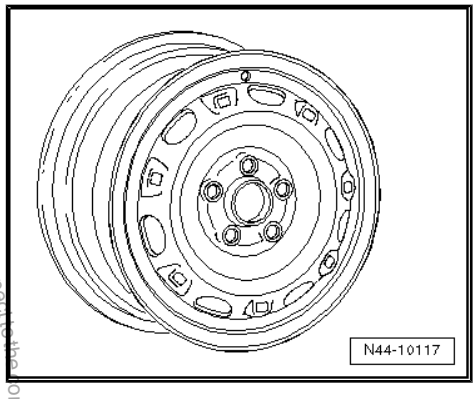

5.2.2 5 J x 14

Caution

Observe the allocation of wheels and tyres to the respective engines, which are listed in the overview table ⇒ page 90 *.*

For 1.2l 40 kW with PAS, 1.2l 47 kW, 1.4l 55 kW, 63 kW and 74 kW, 1.4l 51 kW, 55 kW, 59 kW diesel, 1.9l 47 kW

6Q0 601 027 H - Wheel and tyre combination ⇒ page 91

Size:	5 J x 14
Wheel offset in mm:	35
Wheel load in kg:	455

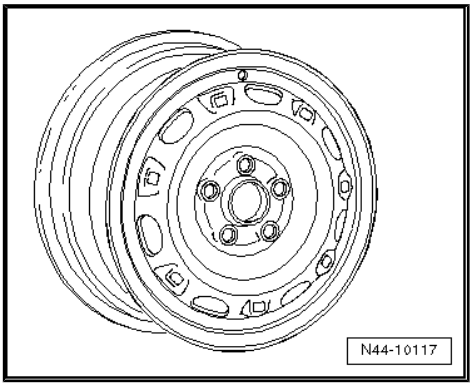

5.2.3 6 J x 14

Caution

Observe the allocation of wheels and tyres to the respective engines, which are listed in the overview table ⇒ page 90 *.*

Protected by copyright. Copyright by Volkswagen AG. Volkswagen AG does not guarantee or accept any liability with respect to the correctness of information in this document. Copyright by Volkswagen AG. Not authorised for commercial purposes, in part or in whole, is not permitted.
satelettronica

For 1.2l 40 kW with PAS, 1.2l 47 kW, 1.4l 55 kW, 63 kW and 74 kW, 1.4l 51 kW, 55 kW, 59 kW diesel, 1.9l 47 kW, 74 kW

6Q0 601 027 F - Wheel and tyre combination ⇒ page 91

Size:	6 J x 14
Wheel offset in mm:	43
Wheel load in kg:	465

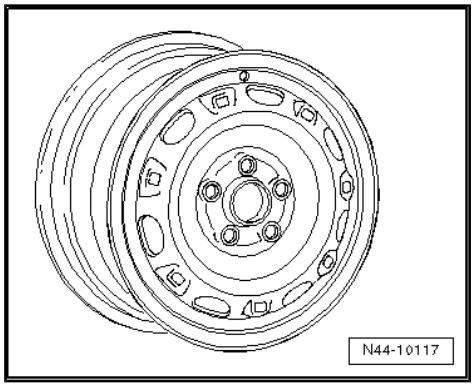

6Q0 601 025 Q - Wheel and tyre combination ⇒ page 91

Size:	6 J x 14
Wheel offset in mm:	43
Wheel load in kg:	465

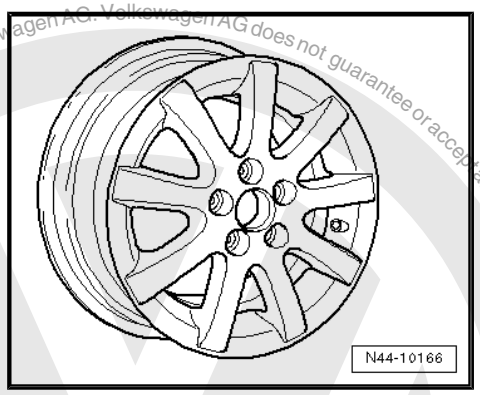

6Q0 601 025 K - Wheel and tyre combination ⇒ page 91

Size:	6 J x 14
Wheel offset in mm:	43
Wheel load in kg:	465

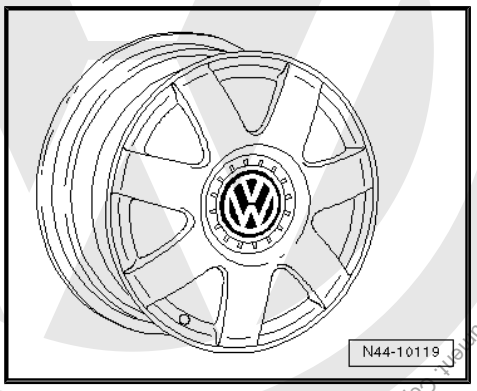

5.2.4 6 J x 15

Caution

Observe the allocation of wheels and tyres to the respective engines, which are listed in the overview table ⇒ page 90 *.*

Protected by copyright. Copying for private or commercial purposes, in part or in whole, is not permitted unless authorised by Volkswagen AG. Volkswagen AG does not guarantee or accept any liability with respect to the correctness of information in this document. Copyright by Volkswagen AG.
satelettronica

For 1.2l 40 kW with PAS, 1.2l 47 kW, 1.4l 55 kW, 63 kW and 74 kW, 1.4l 51 kW, 55 kW, 59 kW diesel, 1.9l 47 kW, 74 kW

6Q0 601 027 G - Wheel and tyre combination ⇒ page 91

Size:	6 J x 15
Wheel offset in mm:	43
Wheel load in kg:	500

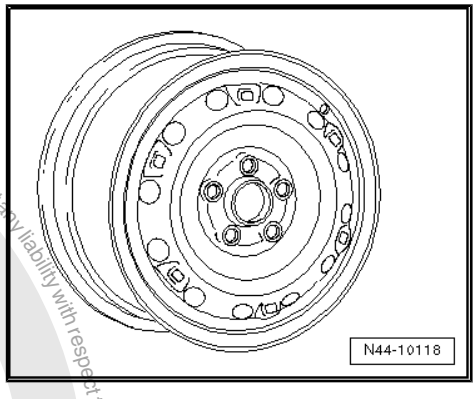

6Q0 601 025 L - Wheel and tyre combination ⇒ page 91

Size:	6 J x 15
Wheel offset in mm:	43
Wheel load in kg:	475

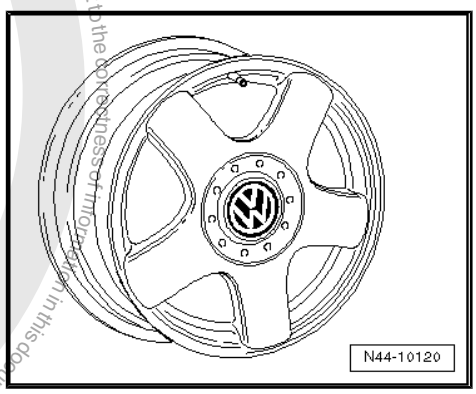

6Q0 601 025 R - Wheel and tyre combination ⇒ page 91

Size:	6 J x 15
Wheel offset in mm:	43
Wheel load in kg:	480

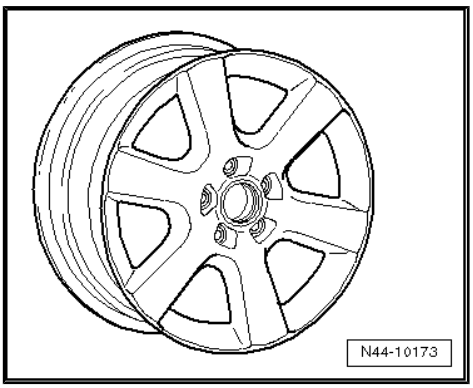

For 96 kW diesel

6Q0 601 027 G - Wheel and tyre combination ⇒ page 92

Size:	6 J x 15
Wheel offset in mm:	43
Wheel load in kg:	500

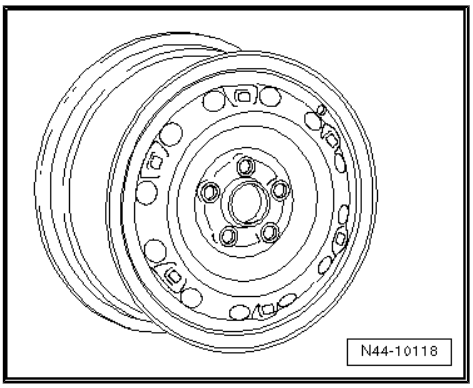

Protected by copyright. Copying for private or commercial purposes, in whole, is not permitted unless authorised by Volkswagen AG. Volkswagen AG does not guarantee or accept any liability with respect to the correctness of information in this document. Copyright by Volkswagen AG.

satelettronica

6Q0 601 025 R - Wheel and tyre combination ⇒ page 91

Size:	6 J x 15
Wheel offset in mm:	43
Wheel load in kg:	480

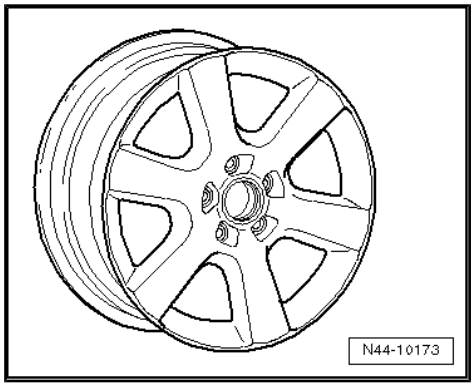

5.2.5 6$^1/_2$ J x 16

Caution

Observe the allocation of wheels and tyres to the respective engines, which are listed in the overview table ⇒ page 90 *.*

For 1.2l 40 kW with PAS, 1.2l 47 kW, 1.4l 55 kW, 63 kW and 74 kW, 1.4l 51 kW, 55 kW, 59 kW diesel, 1.9l 47 kW, 74 kW

6Q0 601 025 C - Wheel and tyre combination ⇒ page 91

Size:	6$^1/_2$ J x 16
Wheel offset in mm:	43
Wheel load in kg:	480

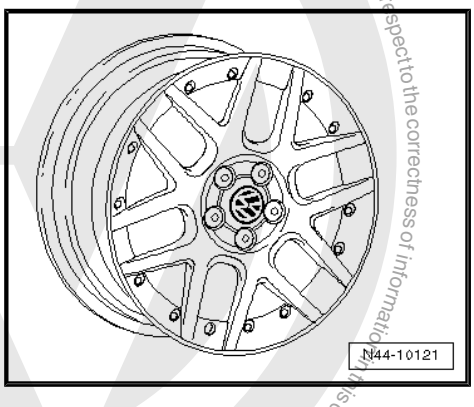

6Q0 601 025 D - Wheel and tyre combination ⇒ page 91

Size:	6$^1/_2$ J x 16
Wheel offset in mm:	43
Wheel load in kg:	475

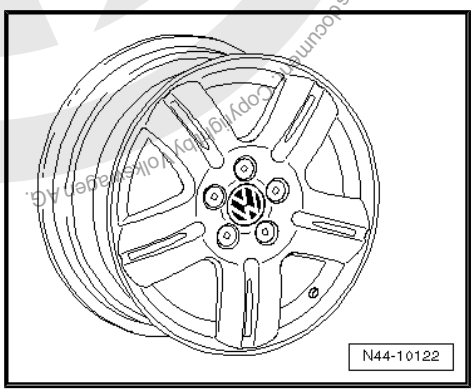

Protected by copyright. Copying for private or commercial purposes, in part or in whole, is not permitted unless authorised by Volkswagen AG. Volkswagen AG does not guarantee or accept any liability with respect to the correctness of information in this document.
Copyright by Volkswagen AG.
satelettronica

Protected by copyright. Copying for private or commercial purposes, in part or in whole, is not permitted unless authorised by Volkswagen AG. Volkswagen AG does not guarantee or accept any liability with respect to the correctness of information in this document. Copyright by Volkswagen AG.

6Q0 601 025 S - Wheel and tyre combination ⇒ page 91

Size:	$6^1/_2$ J x 16
Wheel offset in mm:	43
Wheel load in kg:	480

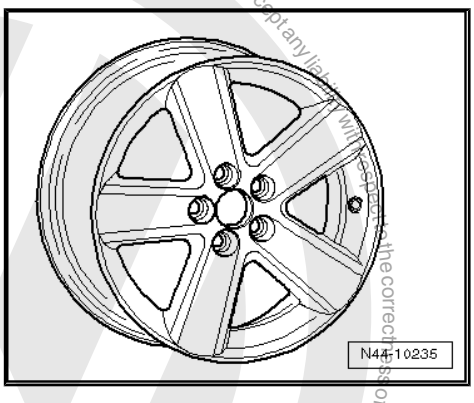

6Q0 601 025 T - Wheel and tyre combination ⇒ page 91

Size:	$6^1/_2$ J x 16
Wheel offset in mm:	43
Wheel load in kg:	480

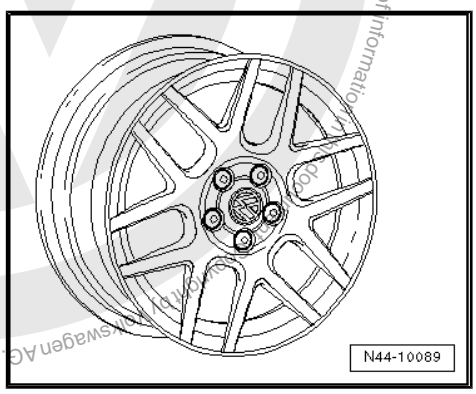

6Q0 601 025 AA - Wheel and tyre combination ⇒ page 91

Size:	$6^1/_2$ J x 16
Wheel offset in mm:	43
Wheel load in kg:	480

For 96 kW diesel

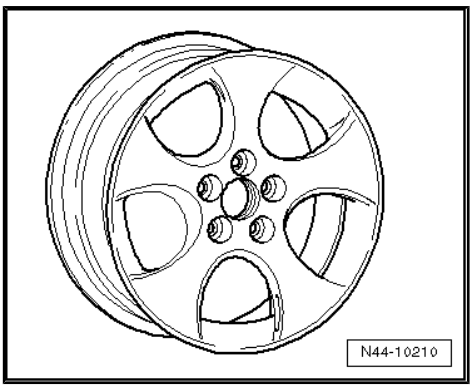

6Q0 601 025 C - Wheel and tyre combination ⇒ page 92

Size:	$6^1/_2$ J x 16
Wheel offset in mm:	43
Wheel load in kg:	480

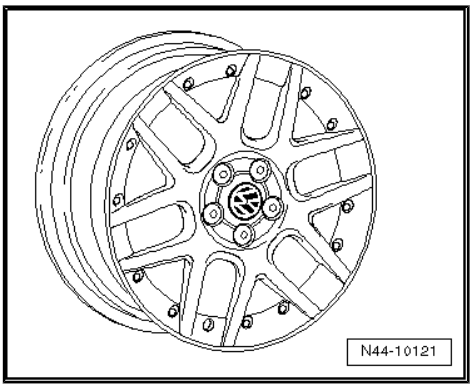

satelettronica

6Q0 601 025 S - Wheel and tyre combination ⇒ page 92

Size:	$6^1/_2$ J x 16
Wheel offset in mm:	43
Wheel load in kg:	480

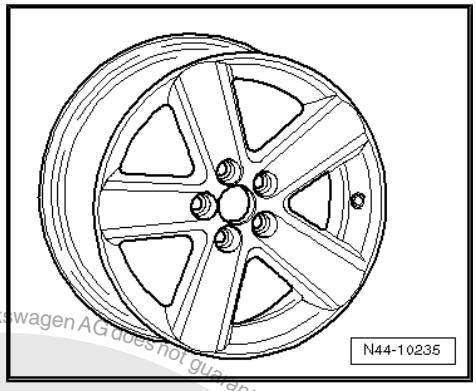

6Q0 601 025 T - Wheel and tyre combination ⇒ page 92

Size:	$6^1/_2$ J x 16
Wheel offset in mm:	43
Wheel load in kg:	480

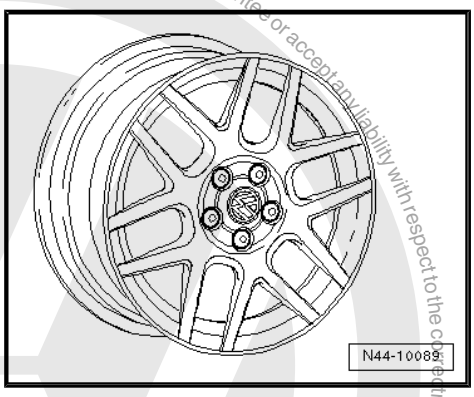

6Q0 601 025 AA - Wheel and tyre combination ⇒ page 92

Size:	$6^1/_2$ J x 16
Wheel offset in mm:	43
Wheel load in kg:	480

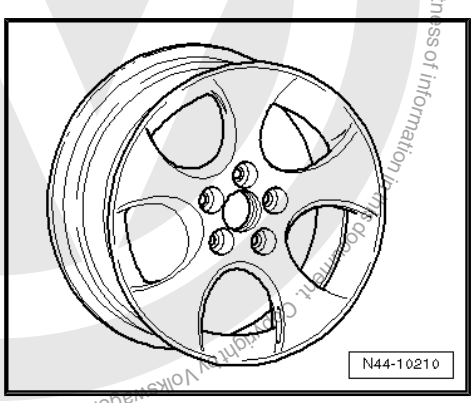

Protected by copyright. Copying for private or commercial purposes, in part or in whole, is not permitted unless authorised by Volkswagen AG. Volkswagen AG does not guarantee or accept any liability with respect to the correctness of information in this document. Copyright by Volkswagen AG.
satelettronica

6 Polo Fun from model year 2004

General

Volkswagen vehicles are built according to the latest findings in safety engineering. To keep it that way, we recommend the use of genuine Volkswagen spare parts only. You can recognise this by the VW Audi logo and by the part number. It has been established that these parts are reliable, safe and suitable.

Despite constant appraisal of the market, we cannot assess other products on these points, even when in isolated cases they have been passed by official inspectors or have been granted official approval. Therefore, we cannot, of course, assume any liability if these products are installed.

WARNING

The products from Volkswagen genuine parts and Votex genuine accessories may differ in fitting requirements, torque specifications and so on.

Always follow the respective fitting and operating instructions.

The wheel and tyre combinations or changes listed in the vehicle tables refer exclusively to Volkswagen Genuine wheels. Approval of wheel and tyre combinations or a change to wheels from the accessories trade is not possible with the parts certificate attached here.

WARNING

The fitting instructions and torque specifications for wheels from Votex genuine accessories may differ from those intended for wheels from Volkswagen genuine parts.

Therefore, always observe the torque settings for the wheel bolts as well as the respective fitting and operating instructions.

Volkswagen AG does not guarantee or accept any liability with respect to the correctness of information in this document. Copyright by Volkswagen AG.
Reproduction for commercial purposes, in part or in whole, is not permitted unless authorised by Volkswagen AG. Copyright by Volkswagen AG.
satelettronica

6.1 Polo Fun, type 9N from model year 2002 through model year 2006

Attachment to parts certificate 1900/05

Type Approval No.: e1*2001/116*0174*07 through e1*2001/116*0174*13

Overview

Model engine output	Tyres	Tyre size	Wheel	Off-set in mm	Snow chains	Remarks
1.2l 40 kW 1.2l 47 kW 1.4l 55 kW 1.4l 63 kW 1.4l 74 kW Petrol engines	Standard tyres	215/40 ZR 17 83W	$7^1/_2$ J x 17 ⇒ page 100	35	No	General notes on winter tyres
1.4l 55 kW 1.9l 74 kW diesel engines	Modification	No changes are permissible apart from the standard wheel and tyre combinations!				Tyre makes recommended by Volkswagen:

Model engine output	Tyres	Tyre size	Wheel	Off-set in mm	Snow chains	Remarks
	Winter tyres	185/60 R 15 84Q/T	6 J x 15 ⇒ page 100	38	Yes	♦ Summer tyres ⇒ page 364 ♦ Winter tyres ⇒ page 388

Tyre pressures can be found on the inside of the fuel tank flap or in ⇒ Maintenance ; Booklet 15.1 .

6.2 Wheel allocation for Polo Fun, type 9N from model year 2004 through model year 2006

Explanation of information on wheels

Torque specifications for wheel bolts ⇒ Running gear, axles, steering; Rep. gr. 44 ; Fitting wheels and tyres; Fitting wheels

Pitch circle diameter	100 mm
Number of wheel bolt holes:	5

6.2.1 6 J x 15

Caution

Observe the allocation of wheels and tyres to the respective engines, which are listed in the overview table ⇒ page 99 .

1J0 601 027 Q - Wheel and tyre combination ⇒ page 100

Winter wheel

Size:	6 J x 15
Wheel offset in mm:	38
Wheel load in kg:	550

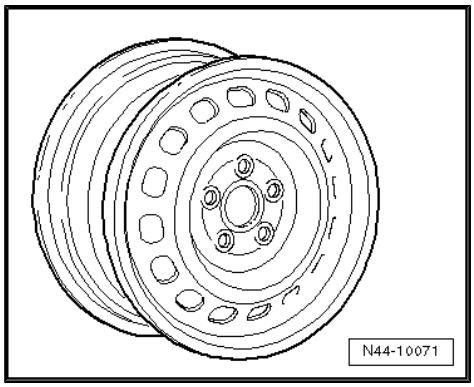

6.2.2 7 1/2 J x 17

Caution

Observe the allocation of wheels and tyres to the respective engines, which are listed in the overview table ⇒ page 99 .

satelettronica

6Q0 601 025 J - Wheel and tyre combination ⇒ page 99

Size:	$7^1/_2$ J x 17
Wheel offset in mm:	35
Wheel load in kg:	480

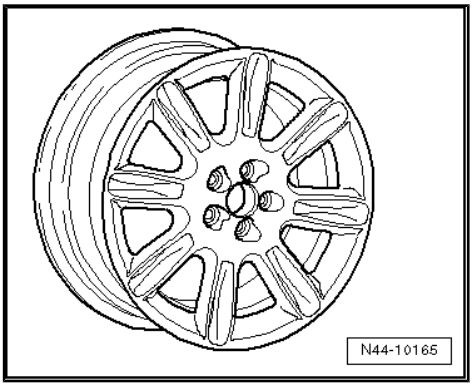

Protected by copyright. Copying for private or commercial purposes, in part or in whole, is not permitted unless authorised by Volkswagen AG. Volkswagen AG does not guarantee or accept any liability with respect to the correctness of information in this document. Copyright by Volkswagen AG.

satelettronica

7 Polo Classic model year 1996 through model year 2002

General

Volkswagen vehicles are built according to the latest findings in safety engineering. To keep it that way, we recommend the use of genuine Volkswagen spare parts only. You can recognise this by the VW Audi logo and by the part number. It has been established that these parts are reliable, safe and suitable.

Despite constant appraisal of the market, we cannot assess other products on these points, even when in isolated cases they have been passed by official inspectors or have been granted official approval. Therefore, we cannot, of course, assume any liability if these products are installed.

> ⚠ **WARNING**
>
> *The products from Volkswagen genuine parts and Votex genuine accessories may differ in fitting requirements, torque specifications and so on.*
>
> *Always follow the respective fitting and operating instructions.*

The wheel and tyre combinations or changes listed in the vehicle tables refer exclusively to Volkswagen Genuine wheels. Approval of wheel and tyre combinations or a change to wheels from the accessories trade is not possible with the parts certificate attached here.

> ⚠ **WARNING**
>
> *The fitting instructions and torque specifications for wheels from Votex genuine accessories may differ from those intended for wheels from Volkswagen genuine parts.*
>
> *Therefore, always observe the torque settings for the wheel bolts as well as the respective fitting and operating instructions.*

7.1 Polo Classic, type 6KV model year 1996 through model year 2002

Appendix 2 to Parts Certificate 1461/02

Type Approval No.: e9*93/81*0008*00 to e9*93/81*0008*08

Type Approval No.: e9*98/14*0008*09 to e9*98/14*0008*16

Overview

Model engine output	Tyres	Tyre size	Wheel	Offset in mm	Snow chains	Remarks
Up to 44 kW petrol engines	Standard tyres	185/60 R 14 82H	6 J x 14 ⇒ page 105	38	No	
	Modification	175/70 R 13 82S	$5^1/_2$ J x 13 ⇒ page 104	38	No	
		185/60 R 14 82S	6 J x 14 ⇒ page 105	38	No	

satelettronica

Protected by copyright. Copyright Volkswagen AG. Volkswagen AG does not guarantee or accept any liability with respect to the correctness of information in this document. Copying for private or commercial purposes, in part or in whole, is not permitted unless authorised by Volkswagen AG.

Model engine output	Tyres	Tyre size	Wheel	Offset in mm	Snow chains	Remarks
		185/55 R 15 81S	6 J x 15 ⇒ page 106	38	No	
	Winter tyres	175/70 R 13 82Q	5 1/2 J x 13 ⇒ page 104	38	Yes	General notes on winter tyres
55 kW petrol engine, up to 55 kW diesel engine	Standard tyres	185/60 R 14 82/83T	6 J x 14 ⇒ page 105	38	No	The winter tyres 175/65 R 14 82Q are not always entered in the vehicle documentation.
	Modification	185/60 R 14 82S	6 J x 14 ⇒ page 105	38	Yes* ⇒ page 103	If necessary, they must be subsequently entered.
		185/55 R 15 82S	6 J x 15 ⇒ page 106	38	Yes* ⇒ page 103	
	Winter tyres	175/65 R 14 82Q	6 J x 14 ⇒ page 105	38	Yes	
		185/60 R 14 82Q* ⇒ page 103	6 J x 14 ⇒ page 105	38	Yes	Tyre makes recommended by Volkswagen: ◆ Summer tyres ⇒ page 364 ◆ Winter tyres ⇒ page 388
66 kW TDI	Standard tyres	185/60 R 14 82/83H	6 J x 14 ⇒ page 105	38	Yes* ⇒ page 103	
	Modification	185/60 R 14 82T	6 J x 14 ⇒ page 105	38	Yes* ⇒ page 103	
		185/55 R 15 81T	6 J x 15 ⇒ page 106	38	Yes* ⇒ page 103	
	Winter tyres	175/65 R 14 82Q	6 J x 14 ⇒ page 105	38	Yes	* Valid only for vehicles from 09.99. Use only small-link snow chains.
		185/60 R 14 82Q* ⇒ page 103	6 J x 14 ⇒ page 105	38	Yes	
74 kW 81 kW TDI	Standard tyres	185/60 R 14 83H	6 J x 14 ⇒ page 105	38	Yes* ⇒ page 103	
	Modification	185/60 R 14 82H	6 J x 14 ⇒ page 105	38	Yes* ⇒ page 103	
		185/55 R 15 81H	6 J x 15 ⇒ page 106	38	Yes* ⇒ page 103	
	Winter tyres	175/65 R 14 82Q	6 J x 14 ⇒ page 105	38	Yes	

satelettronica

Model engine output	Tyres	Tyre size	Wheel	Offset in mm	Snow chains	Remarks
		185/60 R 14 82Q* ⇒ page 103	6 J x 14 ⇒ page 105	38	Yes	

Tyre pressures can be found on the inside of the fuel tank flap or in ⇒ Maintenance ; Booklet 29 .

7.2 Wheel allocation for Polo Classic, type 6KV model year 1996 through model year 2002

Explanation of information on wheels

Tightening torques for wheel bolts ⇒ Running gear, axles, steering; Rep. gr. 40 ; Repairing front wheel suspension; II - Repairing wheel bearing

Pitch circle diameter	100 mm
Number of wheel bolt holes:	4

7.2.1 $5^1/_2$ J x 13

Caution

Observe the allocation of wheels and tyres to the respective engines, which are listed in the overview table ⇒ page 102.

For 40 kW und 44 kW vehicles

191 601 025 D - Wheel and tyre combination ⇒ page 102

Size:	$5^1/_2$ J x 13
Wheel offset in mm:	38
Wheel load in kg:	410

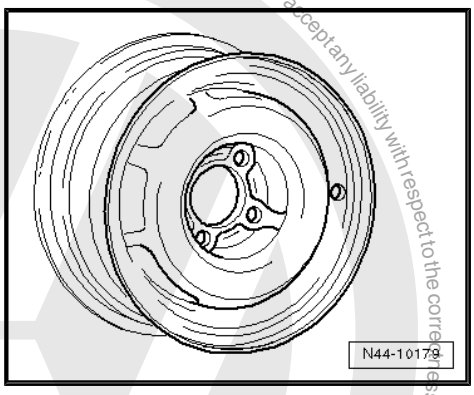

1H0 601 025 A - Wheel and tyre combination ⇒ page 102

Size:	$5^1/_2$ J x 13
Wheel offset in mm:	38
Wheel load in kg:	450

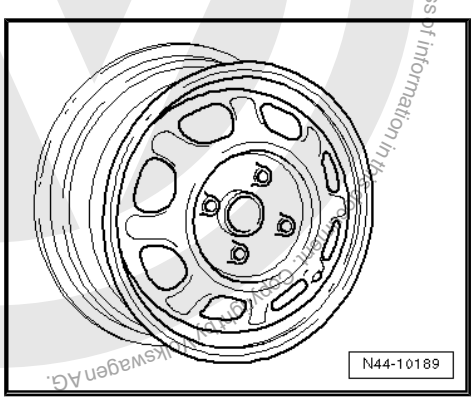

Protected by copyright. Copying for private or commercial purposes, in part or in whole, is not permitted unless authorised by Volkswagen AG. Volkswagen AG does not guarantee or accept any liability with respect to the correctness of information in this document. Copyright by Volkswagen AG.
satelettronica

7.2.2 6 J x 14

Caution

Observe the allocation of wheels and tyres to the respective engines, which are listed in the overview table ⇒ page 102 *.*

For 40 kW and 44 kW vehicles - through vehicle ID No. 6K W 530 000

1L0 601 025 J - Wheel and tyre combination ⇒ page 102

Size:	6 J x 14
Wheel offset in mm:	38
Wheel load in kg:	530

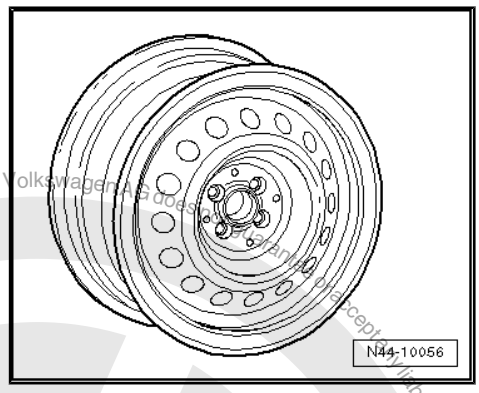

For 40 kW and 44 kW vehicles - from vehicle ID No. 6K W 530 001

6K9 601 027 - Wheel and tyre combination ⇒ page 102

Size:	6 J x 14
Wheel offset in mm:	38
Wheel load in kg:	530

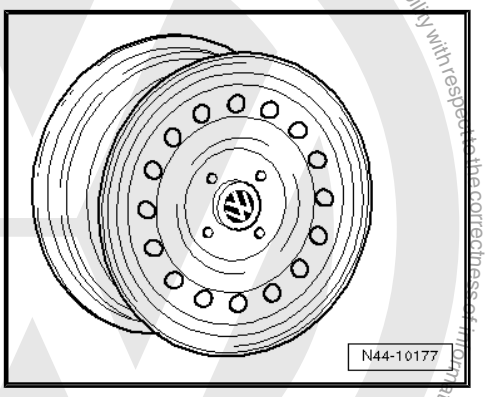

For all vehicles

321 601 025 H - Wheel and tyre combination ⇒ page 102

Size:	6 J x 14
Wheel offset in mm:	38
Wheel load in kg:	500

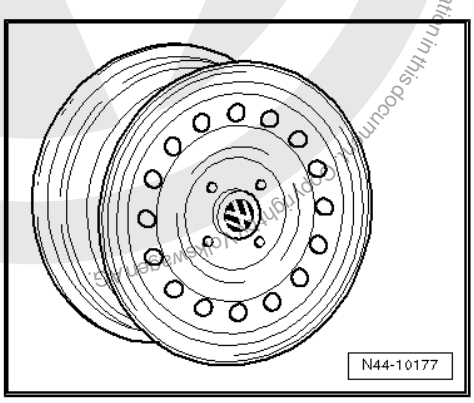

Protected by copyright. Copying for private or commercial purposes, in part or in whole, is not permitted unless authorised by Volkswagen AG. Volkswagen AG does not guarantee or accept any liability with respect to the correctness of information in this document. Copyright by Volkswagen AG.
satelettronica

357 601 025 A/Q - Wheel and tyre combination ⇒ page 102

Size:	6 J x 14
Wheel offset in mm:	38
Wheel load in kg:	530

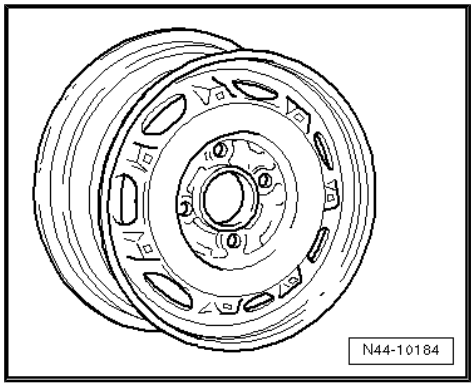

6K0 601 025 M - Wheel and tyre combination ⇒ page 102

Size:	6 J x 14
Wheel offset in mm:	38
Wheel load in kg:	450

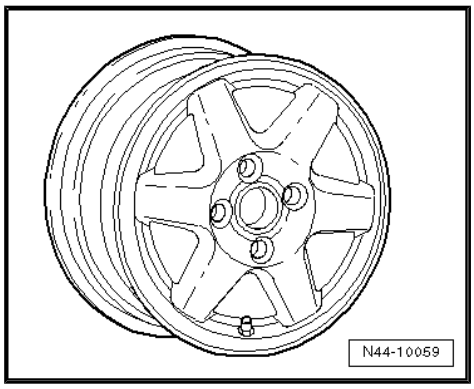

6K0 601 025 S - Wheel and tyre combination ⇒ page 102

Size:	6 J x 14
Wheel offset in mm:	38
Wheel load in kg:	450

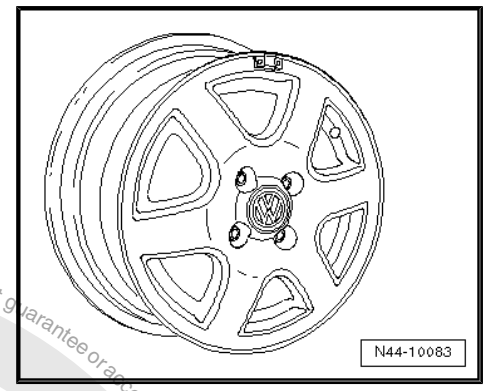

7.2.3 6 J x 15

Caution

Observe the allocation of wheels and tyres to the respective engines, which are listed in the overview table ⇒ page 102 *.*

Protected by copyright. Copying for private or commercial purposes, in part or in whole, is not permitted unless authorised by Volkswagen AG. Volkswagen AG does not guarantee or accept any liability with respect to the correctness of information in this document. Copyright by Volkswagen AG.
satelettronica

For all vehicles

6K0 601 025 Q - Wheel and tyre combination ⇒ page 103

Size:	6 J x 15
Wheel offset in mm:	38
Wheel load in kg:	450

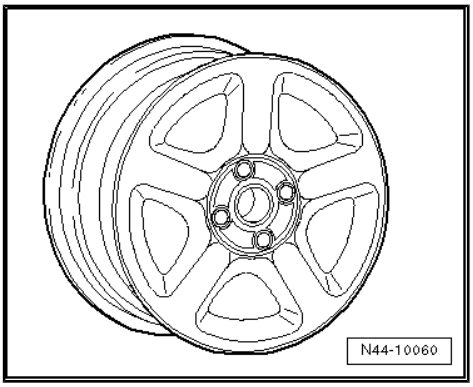

6K0 601 025 AB - Wheel and tyre combination ⇒ page 103

Size:	6 J x 15
Wheel offset in mm:	38
Wheel load in kg:	450

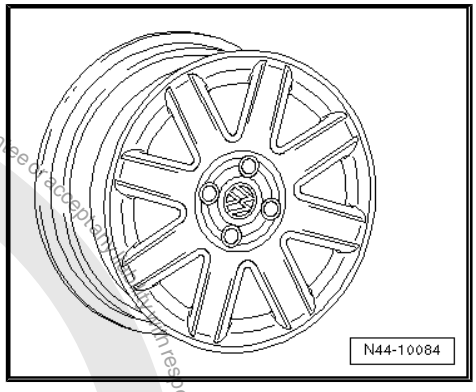

Protected by copyright. Copying for private or commercial purposes, in part or in whole, is not permitted unless authorised by Volkswagen AG. Volkswagen AG does not guarantee or accept any liability with respect to the correctness of information in this document. Copyright by Volkswagen AG.

satelettronica

8 Polo Estate model year 1998 through model year 2002

General

Volkswagen vehicles are built according to the latest findings in safety engineering. To keep it that way, we recommend the use of genuine Volkswagen spare parts only. You can recognise this by the VW Audi logo and by the part number. It has been established that these parts are reliable, safe and suitable.

Despite constant appraisal of the market, we cannot assess other products on these points, even when in isolated cases they have been passed by official inspectors or have been granted official approval. Therefore, we cannot, of course, assume any liability if these products are installed.

> WARNING
>
> *The products from Volkswagen genuine parts and Votex genuine accessories may differ in fitting requirements, torque specifications and so on.*
>
> *Always follow the respective fitting and operating instructions.*

The wheel and tyre combinations or changes listed in the vehicle tables refer exclusively to Volkswagen Genuine wheels. Approval of wheel and tyre combinations or a change to wheels from the accessories trade is not possible with the parts certificate attached here.

> WARNING
>
> *The fitting instructions and torque specifications for wheels from Votex genuine accessories may differ from those intended for wheels from Volkswagen genuine parts.*
>
> *Therefore, always observe the torque settings for the wheel bolts as well as the respective fitting and operating instructions.*

8.1 Polo Estate Type 6KV from model year 1998 through model year 2002

Appendix 2 to Parts Certificate 1461/02

Type Approval No.: e9*93/81*0008*00 to e9*93/81*0008*08

Type Approval No.: e9*98/14*0008*09 to e9*98/14*0008*16

Overview

Model engine output	Tyres	Tyre size	Wheel	Offset in mm	Snow chains	Remarks
Up to 44 kW petrol engines	Standard tyres	185/60 R 14 82H	6 J x 14 ⇒ page 111	38	No	
	Modification	175/70 R 13 82S	$5^1/_2$ J x 13 ⇒ page 110	38	No	
		185/60 R 14 82S	6 J x 14 ⇒ page 111	38	No	

Protected by copyright. Copying for private or commercial purposes, in part or in whole, is not permitted unless authorised by Volkswagen AG. Volkswagen AG does not guarantee or accept any liability with respect to the correctness of information in this document. Copyright by Volkswagen AG.
satelettronica

Model engine output	Tyres	Tyre size	Wheel	Offset in mm	Snow chains	Remarks
		185/55 R 15 81S	6 J x 15 ⇒ page 112	38	No	
	Winter tyres	175/70 R 13 82Q	5 1/2 J x 13 ⇒ page 110	38	Yes	General notes on winter tyres
55 kW petrol engine, up to 55 kW diesel engine	Standard tyres	185/60 R 14 82/83T	6 J x 14 ⇒ page 111	38	No	The winter tyres 175/65 R 14 82Q are not always entered in the vehicle documentation.
	Modification	185/60 R 14 82S	6 J x 14 ⇒ page 111	38	Yes* ⇒ page 109	If necessary, they must be subsequently entered.
		185/55 R 15 82S	6 J x 15 ⇒ page 112	38	Yes* ⇒ page 109	
	Winter tyres	175/65 R 14 82Q	6 J x 14 ⇒ page 111	38	Yes	
		185/60 R 14 82Q* ⇒ page 109	6 J x 14 ⇒ page 111	38	Yes	Tyre makes recommended by Volkswagen: ◆ Summer tyres ⇒ page 365 ◆ Winter tyres ⇒ page 388
66 kW TDI	Standard tyres	185/60 R 14 82/83H	6 J x 14 ⇒ page 111	38	Yes* ⇒ page 109	
	Modification	185/60 R 14 82T	6 J x 14 ⇒ page 111	38	Yes* ⇒ page 109	
		185/55 R 15 81T	6 J x 15 ⇒ page 112	38	Yes* ⇒ page 109	
	Winter tyres	175/65 R 14 82Q	6 J x 14 ⇒ page 111	38	Yes	* Valid only for vehicles from 09.99. Use only small-link snow chains.
		185/60 R 14 82Q* ⇒ page 109	6 J x 14 ⇒ page 111	38	Yes	
74 kW 81 kW TDI	Standard tyres	185/60 R 14 83H	6 J x 14 ⇒ page 111	38	Yes* ⇒ page 109	
	Modification	185/60 R 14 82H	6 J x 14 ⇒ page 111	38	Yes* ⇒ page 109	
		185/55 R 15 81H	6 J x 15 ⇒ page 112	38	Yes* ⇒ page 109	
	Winter tyres	175/65 R 14 82Q	6 J x 14 ⇒ page 111	38	Yes	

Protected by copyright. Copying for private or commercial purposes, in part or in whole, is not permitted unless authorised by Volkswagen AG. Volkswagen AG does not guarantee or accept any liability with respect to the correctness of information in this document. Copyright by Volkswagen AG.
satelettronica

Model engine output	Tyres	Tyre size	Wheel	Offset in mm	Snow chains	Remarks
		185/60 R 14 82Q* ⇒ page 109	6 J x 14 ⇒ page 111	38	Yes	

Tyre pressures can be found on the inside of the fuel tank flap or in ⇒ Maintenance ; Booklet 29 .

8.2 Wheel allocation for Polo Estate Type 6KV from model year 1998 through model year 2002

Explanation of information on wheels

Tightening torques for wheel bolts ⇒ Running gear, axles, steering; Rep. gr. 40 ; Repairing front wheel suspension; II - Repairing wheel bearing

Pitch circle diameter	100 mm
Number of wheel bolt holes:	4

8.2.1 $5^1/_2$ J x 13

Caution

Observe the allocation of wheels and tyres to the respective engines, which are listed in the overview table ⇒ page 108 .

For 40 kW und 44 kW vehicles

191 601 025 D - Wheel and tyre combination ⇒ page 108

Size:	$5^1/_2$ J x 13
Wheel offset in mm:	38
Wheel load in kg:	410

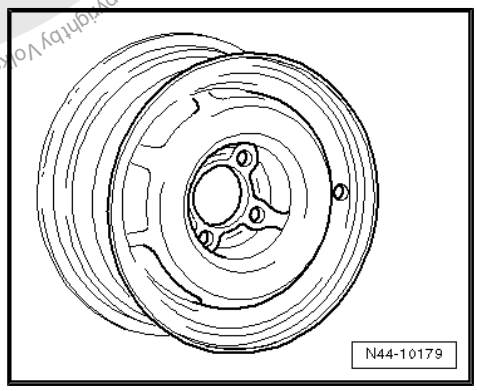

1H0 601 025 A - Wheel and tyre combination ⇒ page 108

Size:	$5^1/_2$ J x 13
Wheel offset in mm:	38
Wheel load in kg:	450

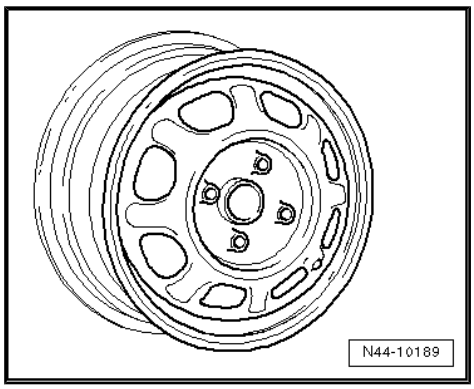

Copyright by Volkswagen AG. Protected by copyright. Copying for private, non-commercial purposes in part or in whole, not permitted unless authorised by Volkswagen AG. Volkswagen AG does not guarantee or accept any liability with respect to the correctness of information in this document.
satelettronica

8.2.2 6 J x 14

Caution

Observe the allocation of wheels and tyres to the respective engines, which are listed in the overview table ⇒ page 108 *.*

For 40 kW and 44 kW vehicles - through vehicle ID No. 6K W 530 000

1L0 601 025 J - Wheel and tyre combination ⇒ page 108

Size:	6 J x 14
Wheel offset in mm:	38
Wheel load in kg:	530

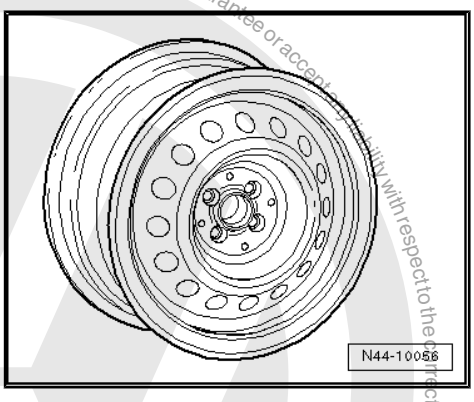

For 40 kW and 44 kW vehicles - from vehicle ID No. 6K W 530 001

6K9 601 027 - Wheel and tyre combination ⇒ page 108

Size:	6 J x 14
Wheel offset in mm:	38
Wheel load in kg:	530

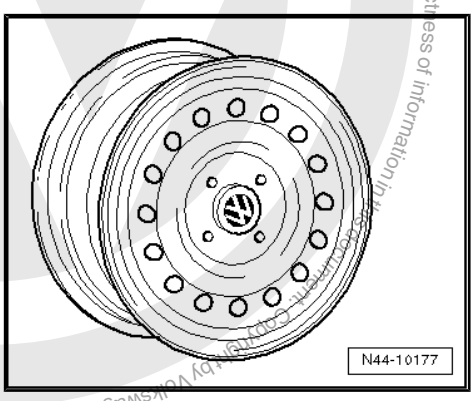

For all vehicles

321 601 025 H - Wheel and tyre combination ⇒ page 108

Size:	6 J x 14
Wheel offset in mm:	38
Wheel load in kg:	500

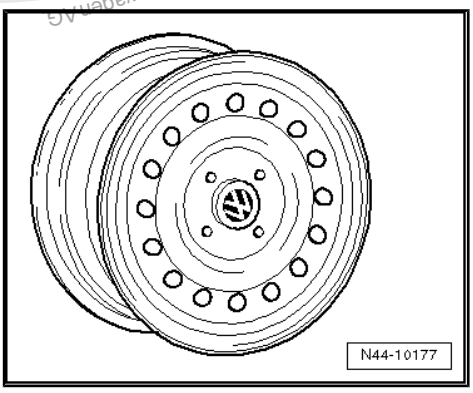

Protected by copyright. Copying for private or commercial purposes, in part or in whole, is not permitted unless authorised by Volkswagen AG. Volkswagen AG does not guarantee or accept any liability with respect to the correctness of information in this document. Copyright by Volkswagen AG.
satelettronica

357 601 025 A/Q - Wheel and tyre combination ⇒ page 108

Size:	6 J x 14
Wheel offset in mm:	38
Wheel load in kg:	530

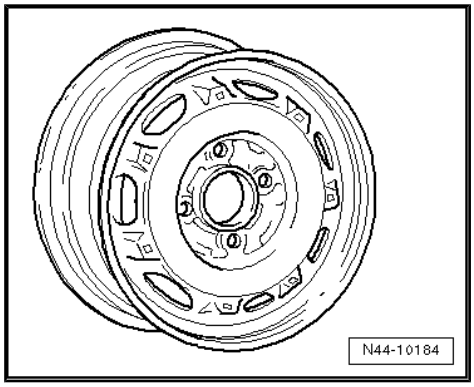

6K0 601 025 M - Wheel and tyre combination ⇒ page 108

Size:	6 J x 14
Wheel offset in mm:	38
Wheel load in kg:	450

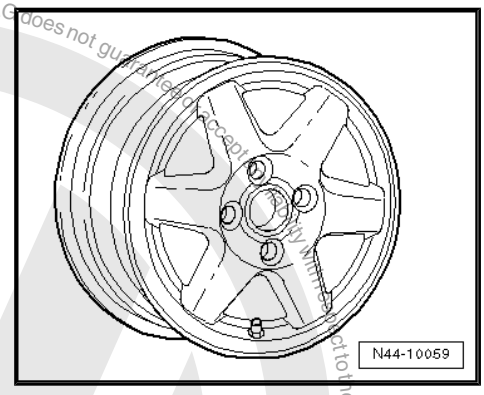

6K0 601 025 S - Wheel and tyre combination ⇒ page 108

Size:	6 J x 14
Wheel offset in mm:	38
Wheel load in kg:	450

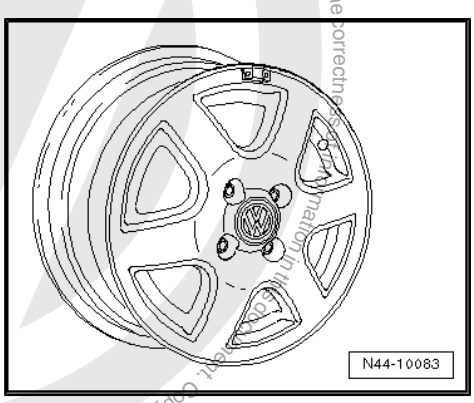

8.2.3 6 J x 15

Caution

Observe the allocation of wheels and tyres to the respective engines, which are listed in the overview table ⇒ page 108 *.*

Protected by copyright. Copying for private or commercial purposes, in part or in whole, is not permitted unless authorised by Volkswagen AG. Volkswagen AG does not guarantee or accept any liability with respect to the correctness of information in this document. Copyright by Volkswagen AG.
satelettronica

For all vehicles

6K0 601 025 Q - Wheel and tyre combination ⇒ page 109

Size:	6 J x 15
Wheel offset in mm:	38
Wheel load in kg:	450

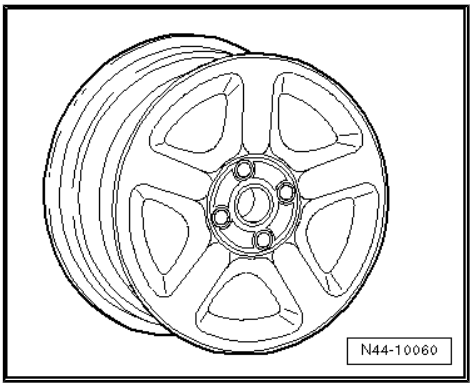

6K0 601 025 AB - Wheel and tyre combination ⇒ page 109

Size:	6 J x 15
Wheel offset in mm:	38
Wheel load in kg:	450

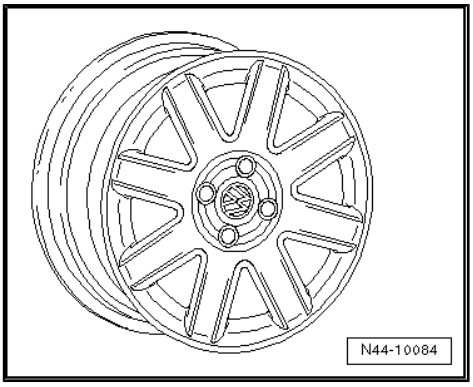

Protected by copyright. Copying for private or commercial purposes, in part or in whole, is not permitted unless authorised by Volkswagen AG. Volkswagen AG does not guarantee or accept any liability with respect to the correctness of information in this document. Copyright by Volkswagen AG.
satelettronica

9 Polo saloon from model year 2004 through model year 2005

General

Volkswagen vehicles are built according to the latest findings in safety engineering. To keep it that way, we recommend the use of genuine Volkswagen spare parts only. You can recognise this by the VW Audi logo and by the part number. It has been established that these parts are reliable, safe and suitable.

Despite constant appraisal of the market, we cannot assess other products on these points, even when in isolated cases they have been passed by official inspectors or have been granted official approval. Therefore, we cannot, of course, assume any liability if these products are installed.

> ⚠ **WARNING**
>
> *The products from Volkswagen genuine parts and Votex genuine accessories may differ in fitting requirements, torque specifications and so on.*
>
> *Always follow the respective fitting and operating instructions.*

The wheel and tyre combinations or changes listed in the vehicle tables refer exclusively to Volkswagen Genuine wheels. Approval of wheel and tyre combinations or a change to wheels from the accessories trade is not possible with the parts certificate attached here.

> ⚠ **WARNING**
>
> *The fitting instructions and torque specifications for wheels from Votex genuine accessories may differ from those intended for wheels from Volkswagen genuine parts.*
>
> *Therefore, always observe the torque settings for the wheel bolts as well as the respective fitting and operating instructions.*

Protected by copyright. Copying for private or commercial purposes, in part or in whole, is not permitted unless authorised by Volkswagen AG. Volkswagen AG does not guarantee or accept any liability with respect to the correctness of information in this document. Copyright by Volkswagen AG.
satelettronica

9.1 Polo saloon, type 9N model year from model year 2004 through model year 2005

Attachment to parts certificate 1900/05

Type Approval No.: e1*2001/116*0174*06 through e1*2001/116*0174*11

Overview

Model engine output	Tyres	Tyre size	Wheel	Offset in mm	Snow chains	Remarks
1.4l 55 kW petrol engine	Standard tyres	165/70 R 14 81T	5 J x 14 ⇒ page 116	35	Yes	
	Modification	185/60 R 14 82T/H	6 J x 14 ⇒ page 116	43	Yes	
		185/55 R 15 82T/H	6 J x 15 ⇒ page 118	43	Yes	

Model engine output	Tyres	Tyre size	Wheel	Off-set in mm	Snow chains	Remarks
		195/50 R 15 82H	6 J x 15 ⇒ page 118	43	No	
		195/55 R 15 85H/V	6 J x 15 ⇒ page 118	43	No	
		205/45 R 16 83V/W	$6^1/_2$ J x 16 ⇒ page 119	43	No	General notes on winter tyres
	Winter tyres	165/70 R 14 81Q	5 J x 14 ⇒ page 116	35	Yes	Tyre makes recommended by Volkswagen:
1.4l 55 kW 1.9l 47 kW diesel engines	Standard tyres	195/55 R15 85V	6 J x 15 ⇒ page 118	43	No	◆ Summer tyres ⇒ page 363 ◆ All-season tyres ⇒ page 380 ◆ Winter tyres ⇒ page 387
	Modification	185/60 R 14 82T/H	6 J x 14 ⇒ page 116	43	Yes	
		185/55 R 15 82T/H	6 J x 15 ⇒ page 118	43	Yes	
		195/50 R 15 82H	6 J x 15 ⇒ page 118	43	No	
		195/55 R 15 85H/V	6 J x 15 ⇒ page 118	43	No	
		205/45 R 16 83V/W	$6^1/_2$ J x 16 ⇒ page 119	43	No	
	Winter tyres	185/60 R 14 82Q	6 J x 14 ⇒ page 116	43	Yes	
		185/55 R 15 82T/H	6 J x 15 ⇒ page 118	43	Yes	
1.4l 74 kW petrol engine	Standard tyres	185/60 R 14 82H	6 J x 14 ⇒ page 116	43	Yes	
	Modification	185/55 R 15 82H	6 J x 15 ⇒ page 118	43	Yes	
		195/50 R 15 82H/V	6 J x 15 ⇒ page 118	43	No	
		195/55 R 15 85H/V	6 J x 15 ⇒ page 118	43	No	
		205/45 R 16 83V/W	$6^1/_2$ J x 16 ⇒ page 119	43	No	

Protected by copyright. Copyright by Volkswagen AG. Volkswagen AG does not guarantee or accept any liability with respect to the correctness of information in this document. Copyright by Volkswagen AG. Protected by copyright. Copyright. Copyright for private or commercial purposes, in part or in whole, is not permitted unless authorised by Volkswagen AG.

satelettronica

Model engine out-put	Tyres	Tyre size	Wheel	Off-set in mm	Snow chains	Remarks
	Winter tyres	185/60 R 14 82Q	6 J x 14 ⇒ page 116	43	Yes	
		185/55 R 15 82T/H	6 J x 15 ⇒ page 118	43	Yes	

Tyre pressures can be found on the inside of the fuel tank flap or in ⇒ Maintenance ; Booklet 15.1 .

9.2 Wheel allocation for Polo saloon, type 9N model year from model year 2004 through model year 2005

Explanation of information on wheels

Torque specifications for wheel bolts ⇒ Running gear, axles, steering; Rep. gr. 44 ; Fitting wheels and tyres; Fitting wheels

Pitch circle diameter	100 mm
Number of wheel bolt holes:	5

9.2.1 5 J x 14

> ⚠ **Caution**
>
> *Observe the allocation of wheels and tyres to the respective engines, which are listed in the overview table ⇒ page 114 .*

6Q0 601 027 H - Wheel and tyre combination ⇒ page 114

Factory equipment only; not available as replacement part

Size:	5 J x 14
Wheel offset in mm:	35
Wheel load in kg:	465

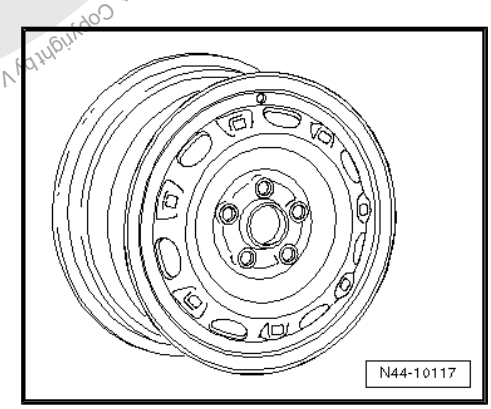

9.2.2 6 J x 14

> ⚠ **Caution**
>
> *Observe the allocation of wheels and tyres to the respective engines, which are listed in the overview table ⇒ page 114 .*

Protected by copyright. Copying for private or commercial purposes, in part or in whole, is not permitted unless authorised by Volkswagen AG. Volkswagen AG does not guarantee or accept any liability with respect to the correctness of information in this document. Copyright by Volkswagen AG.
satelettronica

Factory equipment only; not available as replacement part

6Q0 601 027 A - Wheel and tyre combination ⇒ page 114

Size:	6 J x 14
Wheel offset in mm:	43
Wheel load in kg:	450

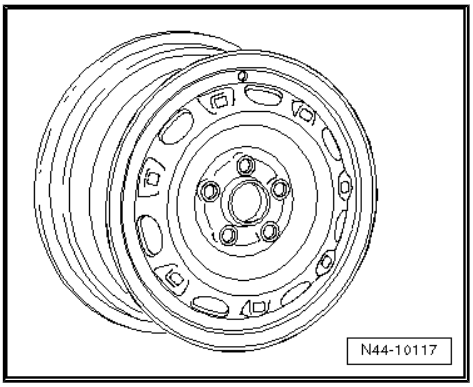

6Q0 601 027 F - Wheel and tyre combination ⇒ page 114

Size:	6 J x 14
Wheel offset in mm:	43
Wheel load in kg:	465

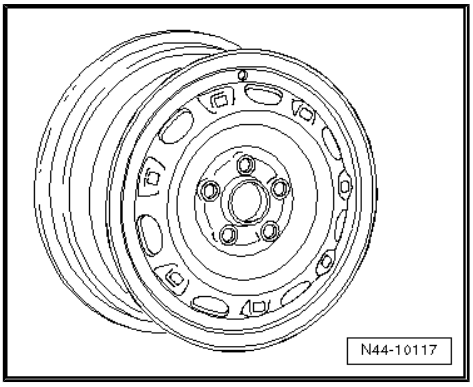

Not factory equipment, but available as replacement parts

6Q0 601 025 Q - Wheel and tyre combination ⇒ page 114

Not factory equipment, but available as replacement part

Size:	6 J x 14
Wheel offset in mm:	43
Wheel load in kg:	465

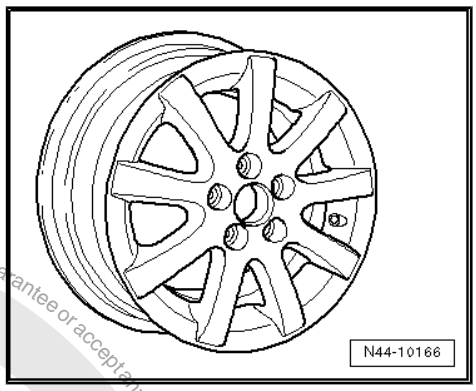

6Q0 601 025 K - Wheel and tyre combination ⇒ page 114

Not factory equipment, but available as replacement part

Size:	6 J x 14
Wheel offset in mm:	43
Wheel load in kg:	465

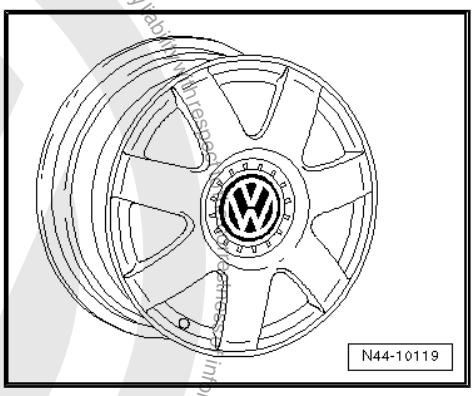

Protected by copyright. Copying for private or commercial purposes, in part or in whole, is not permitted unless authorised by Volkswagen AG. Volkswagen AG does not guarantee or accept any liability with respect to the correctness of information in this document. Copyright by Volkswagen AG.
satelettronica

9.2.3 6 J x 15

Caution

Observe the allocation of wheels and tyres to the respective engines, which are listed in the overview table ⇒ page 114 .

Protected by copyright. Copying for private or commercial purposes, in part or in whole, is not permitted unless authorised by Volkswagen AG. Volkswagen AG does not guarantee or accept any liability with respect to the correctness of information in this document. Copyright by Volkswagen AG.

Factory equipment only; not available as replacement part

6QE 601 025 - Wheel and tyre combination ⇒ page 115

Size:	6 J x 15
Wheel offset in mm:	43
Wheel load in kg:	475

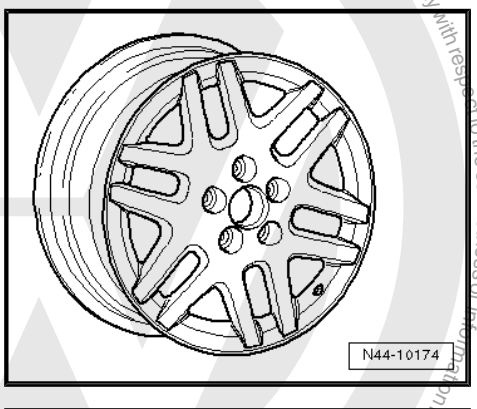

6Q0 601 027 G - Wheel and tyre combination ⇒ page 114

Size:	6 J x 15
Wheel offset in mm:	43
Wheel load in kg:	500

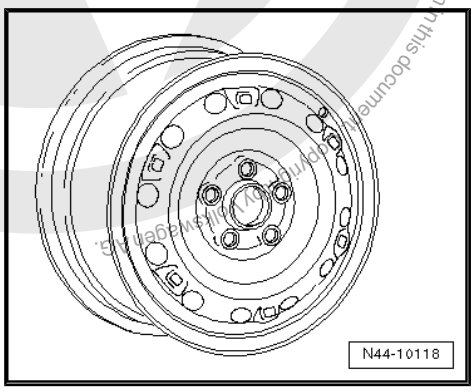

6Q0 601 025 L - Wheel and tyre combination ⇒ page 114

Not factory equipment, but available as replacement part

Size:	6 J x 15
Wheel offset in mm:	43
Wheel load in kg:	475

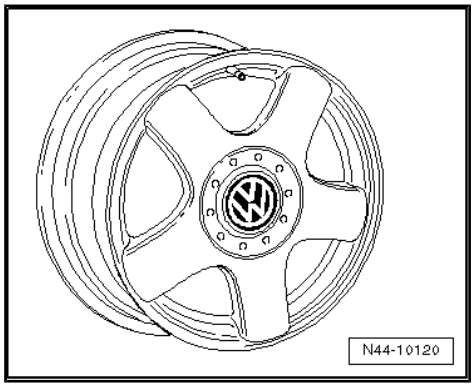

satelettronica

6Q0 601 025 R - Wheel and tyre combination ⇒ page 114

Not factory equipment, but available as replacement part

Size:	6 J x 15
Wheel offset in mm:	43
Wheel load in kg:	480

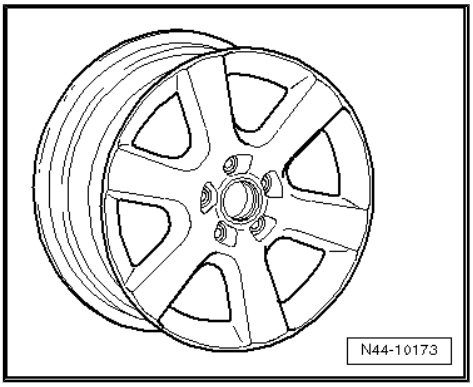

9.2.4 6$^1/_2$ J x 16

Caution

Observe the allocation of wheels and tyres to the respective engines, which are listed in the overview table ⇒ page 114 *.*

Not factory equipment, but available as replacement parts

6Q0 601 025 C - Wheel and tyre combination ⇒ page 115

Size:	6$^1/_2$ J x 16
Wheel offset in mm:	43
Wheel load in kg:	480

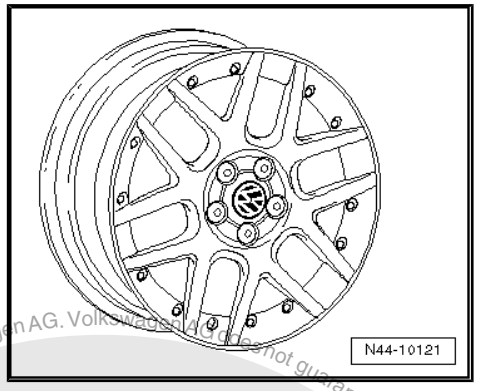

6Q0 601 025 D - Wheel and tyre combination ⇒ page 115

Size:	6$^1/_2$ J x 16
Wheel offset in mm:	43
Wheel load in kg:	475

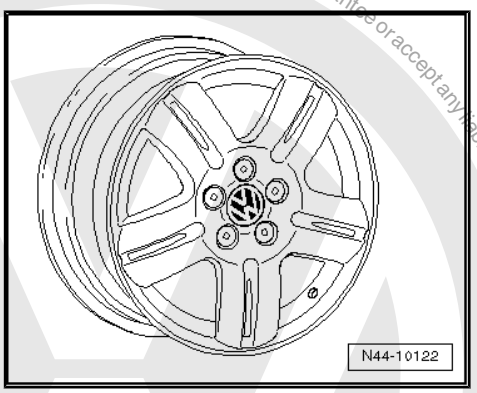

satelettronica
Protected by copyright. Copying for private or commercial purposes, in part or in whole, is not permitted unless authorised by Volkswagen AG. Volkswagen AG does not guarantee or accept any liability with respect to the correctness of information in this document. Copyright by Volkswagen AG.

Protected by copyright. Copying for private or commercial purposes, in part or in whole, is not permitted unless authorised by Volkswagen AG. Volkswagen AG does not guarantee or accept any liability with respect to the correctness of information in this document. Copyright by Volkswagen AG.

6Q0 601 025 T - Wheel and tyre combination ⇒ page 115

Size:	$6^1/_2$ J x 16
Wheel offset in mm:	43
Wheel load in kg:	480

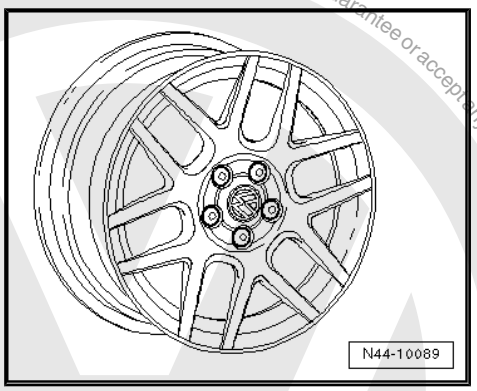

satelettronica

10 Golf model year 1992 through model year 1998

General

Volkswagen vehicles are built according to the latest findings in safety engineering. To keep it that way, we recommend the use of genuine Volkswagen spare parts only. You can recognise this by the VW Audi logo and by the part number. It has been established that these parts are reliable, safe and suitable.

Despite constant appraisal of the market, we cannot assess other products on these points, even when in isolated cases they have been passed by official inspectors or have been granted official approval. Therefore, we cannot, of course, assume any liability if these products are installed.

WARNING

The products from Volkswagen genuine parts and Votex genuine accessories may differ in fitting requirements, torque specifications and so on.

Always follow the respective fitting and operating instructions.

The wheel and tyre combinations or changes listed in the vehicle tables refer exclusively to Volkswagen Genuine wheels. Approval of wheel and tyre combinations or a change to wheels from the accessories trade is not possible with the parts certificate attached here.

WARNING

The fitting instructions and torque specifications for wheels from Votex genuine accessories may differ from those intended for wheels from Volkswagen genuine parts.

Therefore, always observe the torque settings for the wheel bolts as well as the respective fitting and operating instructions.

10.1 Golf type 1HX0, Golf Syncro 1HX1, Golf type 1H

Appendix 2 to Parts Certificate 1479/00

Golf, type 1HX0 from model year 1992 through model year 1997

General type approval No.: F 804

Golf, type 1HX1 from model year 1992 through model year 1997

General type approval No.: G 156

Golf, type 1H model year 1998

Type Approval No. e1*96/79*0068*00 to e1*96/79*0068*03

Overview

Model engine output	Tyres	Tyre size	Wheel	Offset in mm	Snow chains	Remarks
Golf 44 kW, 47 kW, 55 kW, 66 kW petrol engine;	Standard tyres	175/70 R 13 82T	$5^1/_2$ J x 13 ⇒ page 125	38	Yes	

Protected by copyright. Copyright by Volkswagen AG.
Unauthorised use, in whole or in part, is a violation of applicable law. Volkswagen AG does not guarantee or accept any liability with respect to the correctness of information in this document.
satelettronica

Model engine output	Tyres	Tyre size	Wheel	Offset in mm	Snow chains	Remarks
55 kW TD and GTD; Golf Ecomatic and 55 kW with automatic to 12.94	Modification	175/70 R 13 82S	5 1/2 J x 13 ⇒ page 125	38	Yes	
		175/65 R 14 82S	6 J x 14 ⇒ page 126	43/45	Yes	
		185/60 R 14 82T	6 J x 14 ⇒ page 126	43/45	Yes	
		195/50 R 15 82H	6 J x 15 ⇒ page 129	45	Yes	
	Winter tyres	175/70 R 13 82Q	5 1/2 J x 13 ⇒ page 125	38	Yes	
Golf 44 kW, 47 kW, 55 kW petrol engine; 55 kW TD and GTD from 05.96 with ABS	Standard tyres	185/60 R 14 82S	6 J x 14 ⇒ page 126	43/45	Yes	
	Modification	175/65 R 14 82S	6 J x 14 ⇒ page 126	43/45	Yes	175/70 R 13 82S/T are not permitted on vehicles from 05.96 with ABS and all vehicles with GT equipment!
		185/60 R 14 82T	6 J x 14 ⇒ page 126	43/45	Yes	
		195/50 R 15 82H	6 J x 15 ⇒ page 129	45	Yes	
	Winter tyres	175/65 R 14 82S	6 J x 14 ⇒ page 126	43/45	Yes	General notes on winter tyres
Golf 66 kW CL, GL through 12.94	Standard tyres	175/70 R 13 82T	5 1/2 J x 13 ⇒ page 125	38	Yes	Tyre makes recommended by Volkswagen:
	Modification	185/60 R 14 82T	6 J x 14 ⇒ page 126	43/45	Yes	◆ Summer tyres ⇒ page 365 ◆ All-season tyres ⇒ page 380 ◆ Winter tyres ⇒ page 389
		195/50 R 15 82H	6 J x 15 ⇒ page 129	45	Yes	
	Winter tyres	175/70 R 13 82Q	5 1/2 J x 13 ⇒ page 125	38	Yes	

Protected by copyright. Copying for private or public purposes, in part or in whole, is not permitted unless authorised by Volkswagen AG. Volkswagen AG does not guarantee or accept any liability with respect to the correctness of information in this document. Copyright by Volkswagen AG.

satelettronica

Model engine output	Tyres	Tyre size	Wheel	Offset in mm	Snow chains	Remarks
Golf Syncro; 66 kW, 66 kW GT through 12.94	Standard tyres	185/60 R 14 82H	6 J x 14 ⇒ page 126	43/45	Yes	Syncro vehicles: Snow chains are permitted on the front wheels only.
	Modification	175/70 R 13 82T	$5^1/_2$ J x 13 ⇒ page 125	38	Yes	
		185/60 R 14 82T	6 J x 14 ⇒ page 126	43/45	Yes	
		195/50 R 15 82H	6 J x 15 ⇒ page 129	45	Yes	
	Winter tyres	175/70 R 13 82Q	$5^1/_2$ J x 13 ⇒ page 125	38	Yes	
Golf Syncro; 66 kW CL, GL from 01.95; 66 kW TDI	Standard tyres	185/60 R 14 82T	6 J x 14 ⇒ page 126	43/45	Yes	
	Modification	195/60 R 14 85H	6 J x 14 ⇒ page 126	43/45	Yes	
		195/50 R 15 82H	6 J x 15 ⇒ page 129	45	Yes	
	Winter tyres	175/65 R 14 82Q	6 J x 14 ⇒ page 126	43/45	Yes	
Golf 55 kW, 66 kW, 66 kW GT and Golf Ecomatic from 01.95	Standard tyres	185/60 R 14 82T	6 J x 14 ⇒ page 126	43/45	Yes	
	Modification	195/50 R 15 82H	6 J x 15 ⇒ page 129	45	Yes	
	Winter tyres	175/65 R 14 82Q	6 J x 14 ⇒ page 126	43/45	Yes	
all 74 kW; 85 kW CL, GL; 81 kW TDI CL, GL	Standard tyres	185/60 R 14 82H	6 J x 14 ⇒ page 126	43/45	Yes	
	Modification	195/50 R 15 82H	6 J x 15 ⇒ page 129	45	Yes	
	Winter tyres	175/65 R 14 82Q	6 J x 14 ⇒ page 126	43/45	Yes	
85 kW GTI; 81 kW TDI GTI	Standard tyres	195/50 R 15 82V	6 J x 15 ⇒ page 129	38	Yes	
	Modification	195/50 R 15 82H	6 J x 15 ⇒ page 129	38	Yes	
		195/50 R 15 82H	$6^1/_2$ J x 15 ⇒ page 131	43	Yes	

Protected by copyright. Copying for private or commercial purposes, in part or in whole, is not permitted unless authorised by Volkswagen AG. Volkswagen AG does not guarantee or accept any liability with respect to the correctness of information in this document. Copyright by Volkswagen AG.
satelettronica

Model engine out-put	Tyres	Tyre size	Wheel	Off-set in mm	Snow chains	Remarks
		205/50 R 15 82H	$6^1/_2$ J x 15 ⇒ page 131	43	Yes	
		215/40 R 16 82V	7 J x 16 ⇒ page 134	43	No	
	Winter tyres	185/55 R 15 81T	6 J x 15 ⇒ page 129	38	Yes	Vehicles through 12.94
		185/55 R 15 81T	6 J x 15 ⇒ page 129	35	Yes	Vehicles from 01.95
110 kW GTI 16V	Standard tyres	205/50 R 15 86V	6 J x 15 ⇒ page 129	38	Yes	
	Modification	195/50 R 15 82V	6 J x 15 ⇒ page 129	38	Yes	
		195/50 R 15 82V	$6^1/_2$ J x 15 ⇒ page 131	43	Yes	
		215/40 R 16 82V	7 J x 16 ⇒ page 134	43	No	
	Winter tyres	185/55 R 15 81T	6 J x 15 ⇒ page 129	38	Yes	Vehicles through 12.94
		185/55 R 15 81T	6 J x 15 ⇒ page 129	35	Yes	Vehicles from 01.95
128 kW VR6	Standard tyres	205/50 R 15 86V	$6^1/_2$ J x 15 ⇒ page 131	43	Yes	
	Modification	215/40 R 16 86W reinforced	7 J x 16 ⇒ page 134	43	No	
	Winter tyres	185/55 R 15 81T reinforced	6 J x 15 ⇒ page 129	38	Yes	Vehicles through 12.94
		185/55 R 15 81T reinforced	6 J x 15 ⇒ page 129	35	Yes	Vehicles from 01.95
128 kW VR6 Syncro 140 kW	Standard tyres	205/50 R 15 86W	$6^1/_2$ J x 15 ⇒ page 131	43	Yes	Syncro vehicles: Snow chains may be fitted on the front wheels only!
	Modification	205/50 ZR 15 86W reinforced	$6^1/_2$ J x 15 ⇒ page 131	43	Yes	
	Winter tyres	185/55 R 15 81T reinforced	6 J x 15 ⇒ page 129	35	Yes	

Tyre pressures can be found on the inside of the fuel tank flap or in ⇒ Maintenance ; Booklet 35 .

Protected by copyright. Copying for private or commercial purposes, in part or in whole, is not permitted unless authorised by Volkswagen AG. Volkswagen AG does not guarantee or accept any liability with respect to the correctness of information in this document. Copyright by Volkswagen AG.

satelettronica

10.2 Wheel allocation for Golf type 1HX0, Golf Syncro 1HX1, Golf type 1H

Golf, type 1HX0 from model year 1992 through model year 1997

Golf Syncro, type 1HX1 from model year 1992 through model year 1997

Golf, type 1H model year 1998

Explanation of information on wheels

Torque specifications for wheel bolts ⇒ Running gear; Rep. gr. 40 ; Repairing front suspension (basic running gear); Removing and installing wheel bearing, strut, drive shaft (basic suspension) or ⇒ Running gear; Rep. gr. 40 ; Repairing front suspension (plus running gear); Removing and installing wheel bearing, strut (plus running gear)

Pitch circle diameter: 100 mm

10.2.1 $5^1/_2$ J x 13

Caution

Observe the allocation of wheels and tyres to the respective engines, which are listed in the overview table ⇒ page 121 .

Golf through 55 kW CL, GL with manual gearbox (front-wheel drive)

191 601 025 D - Wheel and tyre combination ⇒ page 121

Size:	$5^1/_2$ J x 13
Wheel offset in mm:	38
Wheel load in kg:	410
Number of wheel bolt holes:	4

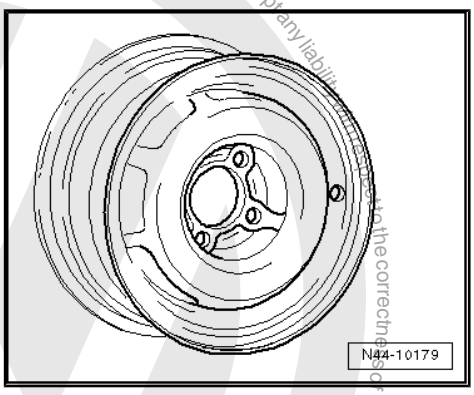

Golf through 66 kW CL, GL with petrol and diesel engines, Golf Syncro 66 kW through 12.94

1H0 601 025 A - Wheel and tyre combination ⇒ page 121

Size:	$5^1/_2$ J x 13
Wheel offset in mm:	38
Wheel load in kg:	450
Number of wheel bolt holes:	4

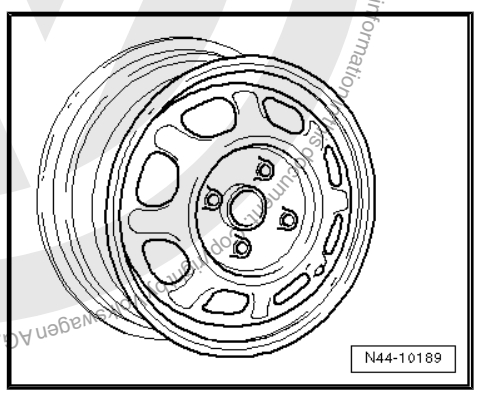

Protected by copyright. Copying for private or commercial purposes, in part or in whole is not permitted unless authorised by Volkswagen AG. Volkswagen AG does not guarantee or accept any liability with respect to the correctness of information in this document. Copyright by Volkswagen AG.
satelettronica

321 601 025 J/M - Wheel and tyre combination ⇒ page 121

Size:	$5^1/_2$ J x 13
Wheel offset in mm:	38
Wheel load in kg:	460
Number of wheel bolt holes:	4

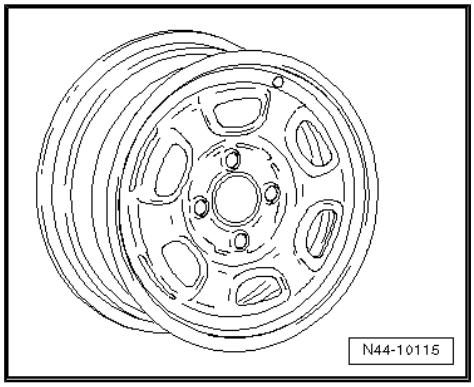

10.2.2 6 J x 14

Golf through 85 kW CL, GL, Golf 66 kW GT, Golf Syncro 66 kW,

> ⚠ **Caution**
>
> *Observe the allocation of wheels and tyres to the respective engines, which are listed in the overview table* ⇒ page 121 *.*

811 601 025 P - Wheel and tyre combination ⇒ page 123

Note

This rim is allowed only for vehicles with a maximum permitted axle load of 880 kg.

Size:	6 J x 14
Wheel offset in mm:	45
Wheel load in kg:	440
Number of wheel bolt holes:	4

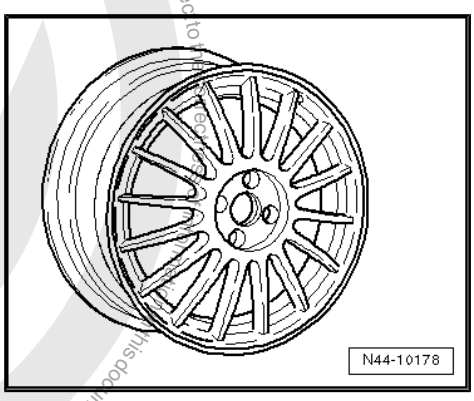

1H0 601 025 D - Wheel and tyre combination ⇒ page 123

Size:	6 J x 14
Wheel offset in mm:	45
Wheel load in kg:	450
Number of wheel bolt holes:	4

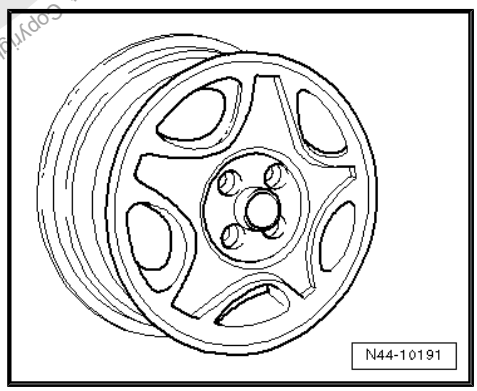

Protected by copyright. Copying for private or commercial purposes, in part or in whole, is not permitted unless authorised by Volkswagen AG. Volkswagen AG does not guarantee or accept any liability with respect to the correctness of this document. Copyright by Volkswagen AG.

satelettronica

1H0 601 025 AE - Wheel and tyre combination ⇒ page 123

Size:	6 J x 14
Wheel offset in mm:	45
Wheel load in kg:	480
Number of wheel bolt holes:	4

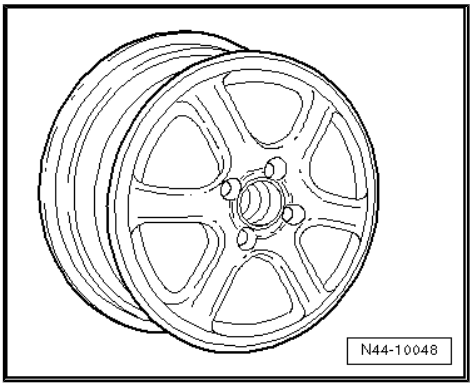

1H0 601 027 - Wheel and tyre combination ⇒ page 123

Size:	6 J x 14
Wheel offset in mm:	45
Wheel load in kg:	500
Number of wheel bolt holes:	4

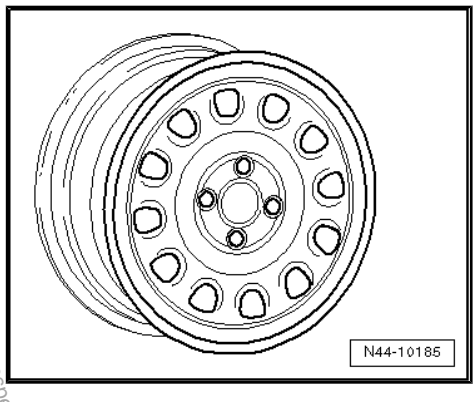

1H0 601 027 A - Wheel and tyre combination ⇒ page 123

Size:	6 J x 14
Wheel offset in mm:	43
Wheel load in kg:	500
Number of wheel bolt holes:	4

Golf through 85 kW, petrol and diesel engines CL, GL, Golf 66 kW GT, all Golf Syncro 66 kW

Not for „20 Years GTI“ special models

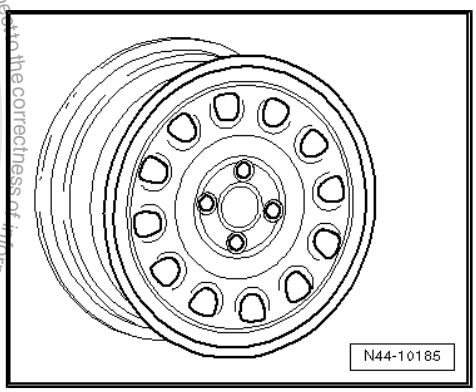

1H0 601 025 P - Wheel and tyre combination ⇒ page 122

Size:	6 J x 14
Wheel offset in mm:	45
Wheel load in kg:	460
Number of wheel bolt holes:	4

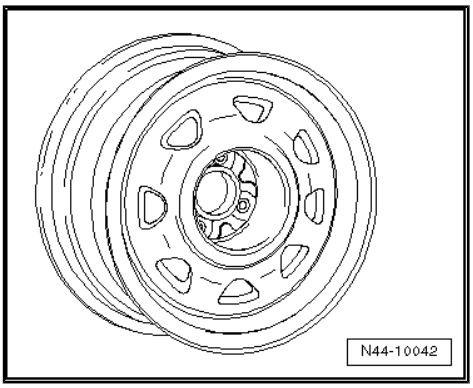

Protected by copyright. Copyright by Volkswagen AG.
Volkswagen AG. Volkswagen AG does not guarantee or accept any liability with respect to the correctness of information in this document. Copyright by Volkswagen AG.
is not permitted unless authorised by Volkswagen AG, in part or in whole, for commercial purposes or private or commercial purposes.
satelettronica

Protected by copyright. Copying for private or commercial purposes, in part or in whole, is not permitted unless authorised by Volkswagen AG. Volkswagen AG does not guarantee or accept any liability with respect to the correctness of information in this document. Copyright by Volkswagen AG.

1HM 601 025 - Wheel and tyre combination ⇒ page 122

Size:	6 J x 14
Wheel offset in mm:	45
Wheel load in kg:	460
Number of wheel bolt holes:	4

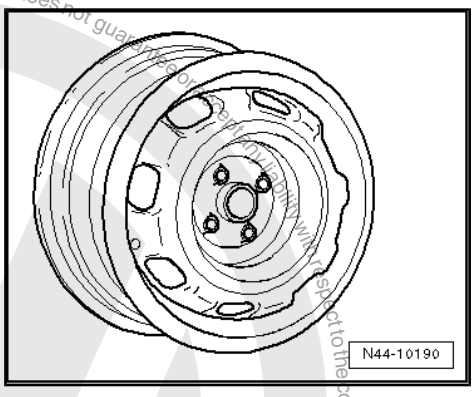

1H0 601 025 B - Wheel and tyre combination ⇒ page 122

Size:	6 J x 14
Wheel offset in mm:	45
Wheel load in kg:	460
Number of wheel bolt holes:	4

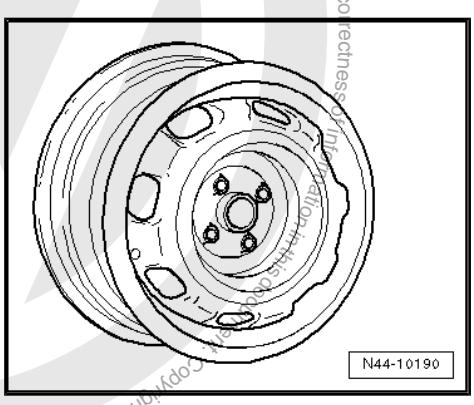

1H0 601 027 A - Wheel and tyre combination ⇒ page 122

Size:	6 J x 14
Wheel offset in mm:	43
Wheel load in kg:	500
Number of wheel bolt holes:	4

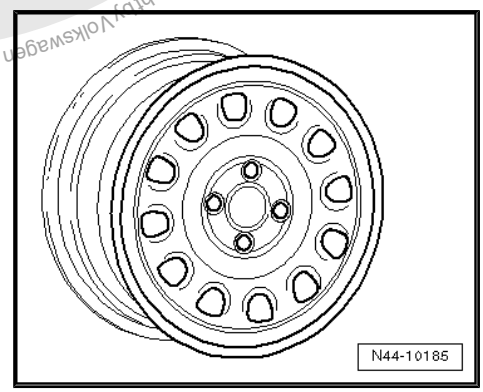

1H0 601 025 R - Wheel and tyre combination ⇒ page 122

Size:	6 J x 14
Wheel offset in mm:	45
Wheel load in kg:	500
Number of wheel bolt holes:	4

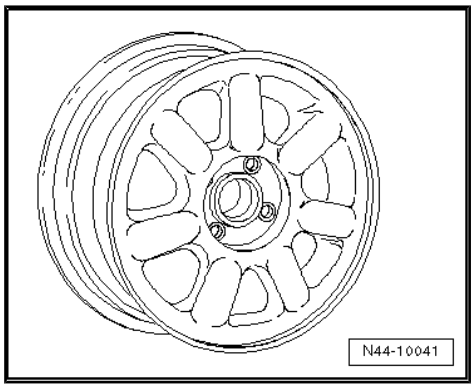

satelettronica

10.2.3 6 J x 15

Golf through 85 kW CL, GL, Golf 66 kW GT, Golf Syncro 66 kW,

> ⚠ **Caution**
>
> *Observe the allocation of wheels and tyres to the respective engines, which are listed in the overview table* ⇒ page 121 .

1H0 601 025 E - Wheel and tyre combination ⇒ page 123

Size:	6 J x 15
Wheel offset in mm:	45
Wheel load in kg:	450
Number of wheel bolt holes:	4

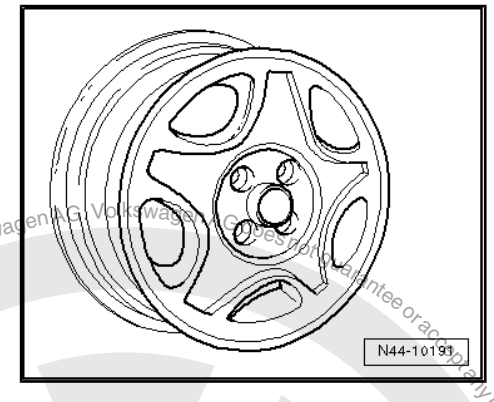

1H0 601 025 L - Wheel and tyre combination ⇒ page 123

Size:	6 J x 15
Wheel offset in mm:	45
Wheel load in kg:	450
Number of wheel bolt holes:	4

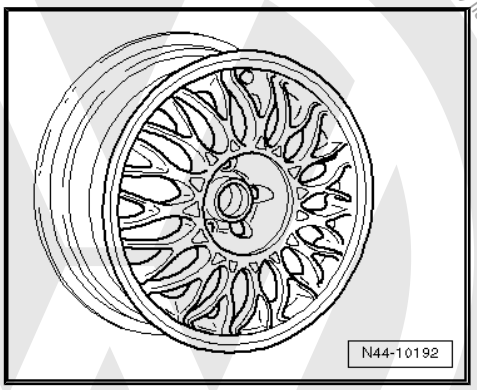

1H0 601 025 Q - Wheel and tyre combination ⇒ page 123

Size:	6 J x 15
Wheel offset in mm:	45
Wheel load in kg:	450
Number of wheel bolt holes:	4

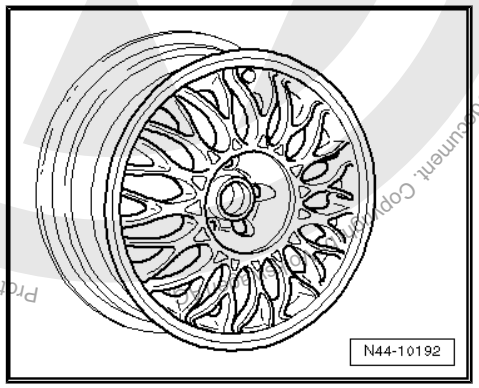

Protected by copyright. Copying for private or commercial purposes, in part or in whole, is not permitted unless authorised by Volkswagen AG. Volkswagen AG does not guarantee or accept any liability with respect to the correctness of information in this document. Copyright
satelitonica

1H0 601 025 AD - Wheel and tyre combination ⇒ page 123

Size:	6 J x 15
Wheel offset in mm:	45
Wheel load in kg:	460
Number of wheel bolt holes:	4

Golf through 85 kW, petrol and diesel engines CL, GL, Golf 66 kW GT, all Golf Syncro 66 kW

Not for „20 Years GTI“ special models

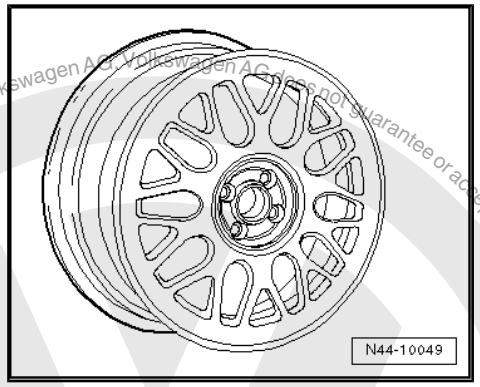

1H0 601 025 AD - Wheel and tyre combination ⇒ page 122

Size:	6 J x 15
Wheel offset in mm:	45
Wheel load in kg:	460
Number of wheel bolt holes:	4

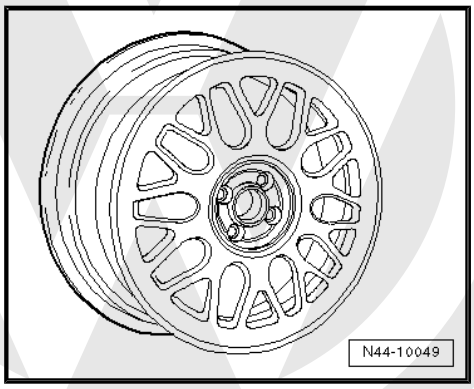

1H0 601 025 AE - Wheel and tyre combination ⇒ page 122

Size:	6 J x 15
Wheel offset in mm:	45
Wheel load in kg:	480
Number of wheel bolt holes:	4

Golf GTI 85 kW, Golf GTI 16V

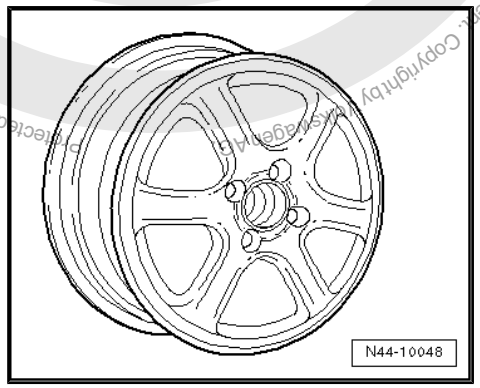

1H0 601 025 J - Wheel and tyre combination ⇒ page 123

Size:	6 J x 15
Wheel offset in mm:	38
Wheel load in kg:	530
Number of wheel bolt holes:	5

Golf GTI 85 kW, Golf GTI 16V Golf VR6 through 12.94, Golf VR6 Syncro through 12.94

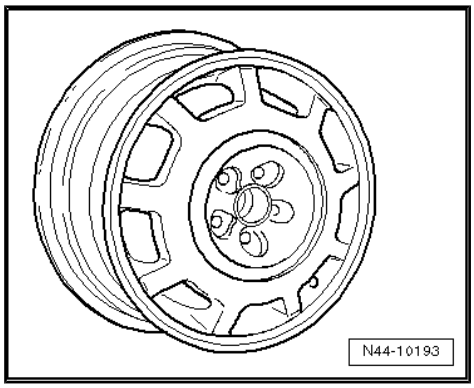

Copyright by Volkswagen AG. Volkswagen AG does not guarantee or accept any liability with respect to the correctness of information in this document. Copyright by Volkswagen AG. Protected by copyright. Copying for private or commercial purposes, in part or in whole, is not permitted unless authorised by Volkswagen AG.
satelettronica

1H0 601 025 K - Wheel and tyre combination ⇒ page 123

Size:	6 J x 15
Wheel offset in mm:	38
Wheel load in kg:	490
Number of wheel bolt holes:	5

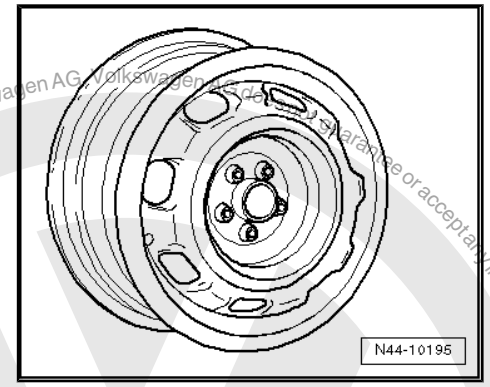

Golf GTI 85 kW, Golf GTI 16V, Golf VR6, Golf VR6 Syncro

> ⚠ **Caution**
>
> *Observe the allocation of wheels and tyres to the respective engines, which are listed in the overview table* ⇒ page 121 *.*

3A0 601 027 - Wheel and tyre combination ⇒ page 124

Possible for snow tyres.

Size:	6 J x 15
Wheel offset in mm:	35
Wheel load in kg:	530
Number of wheel bolt holes:	5

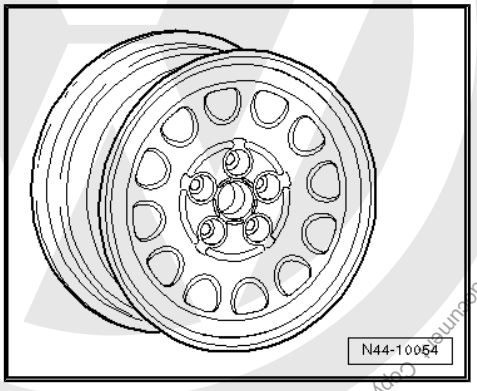

10.2.4 6 1/2 J x 15

Golf GTI 85 kW, Golf GTI 16V Golf VR6 through 12.94, Golf VR6 Syncro through 12.94

1H0 601 025 F - Wheel and tyre combination ⇒ page 123

Size:	6 1/2 J x 15
Wheel offset in mm:	43
Wheel load in kg:	490
Number of wheel bolt holes:	5

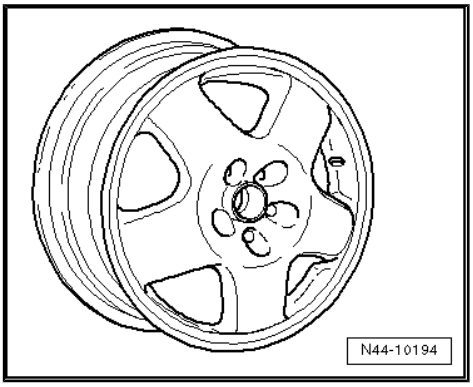

Golf GTI 85 kW, Golf GTI 15V with 280 mm diameter brake disc on the front axle

Golf VR6, Golf VR6 Syncro with 280 mm diameter brake disc on the front axle

1H0 601 025 N - Wheel and tyre combination ⇒ page 123

Size:	6 1/2 J x 15
Wheel offset in mm:	43
Wheel load in kg:	490
	5

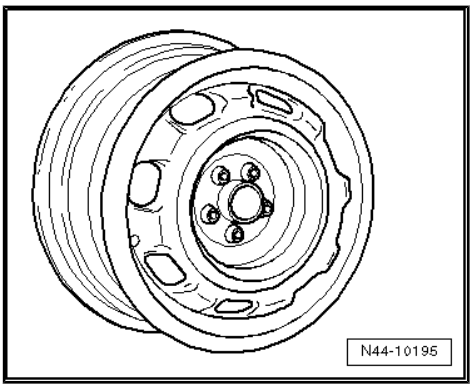

Protected by copyright. Copying for private or commercial purposes, in part or in whole, is not permitted unless authorised by Volkswagen AG. Volkswagen AG does not guarantee or accept any liability with respect to the correctness of information in this document. Copyright by Volkswagen AG.
satelettronica

1H0 601 025 M - Wheel and tyre combination ⇒ page 123

Size:	$6^1/_2$ J x 15
Wheel offset in mm:	43
Wheel load in kg:	490
Number of wheel bolt holes:	5

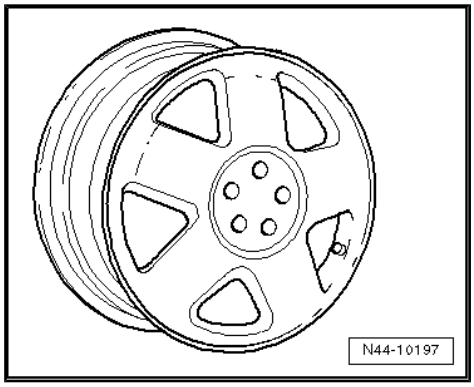

535 601 025 D - Wheel and tyre combination ⇒ page 123

Size:	$6^1/_2$ J x 15
Wheel offset in mm:	43
Wheel load in kg:	510
Number of wheel bolt holes:	5

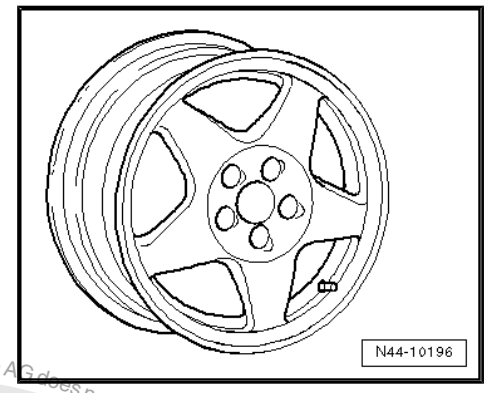

1H0 601 025 G - Wheel and tyre combination ⇒ page 123

Size:	$6^1/_2$ J x 15
Wheel offset in mm:	43
Wheel load in kg:	490
Number of wheel bolt holes:	5

Golf GTI 85 kW, Golf GTI 16V, Golf VR6, Golf VR6 Syncro

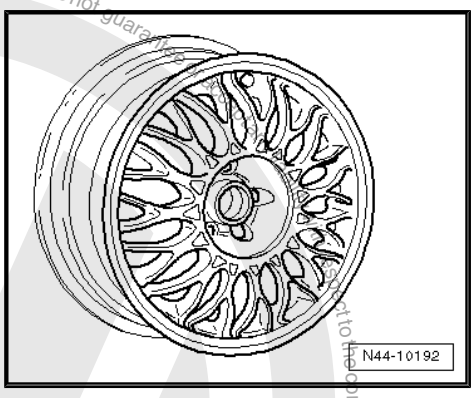

1H0 601 025 AA - Wheel and tyre combination ⇒ page 123

Size:	$6^1/_2$ J x 15
Wheel offset in mm:	43
Wheel load in kg:	500
Number of wheel bolt holes:	5

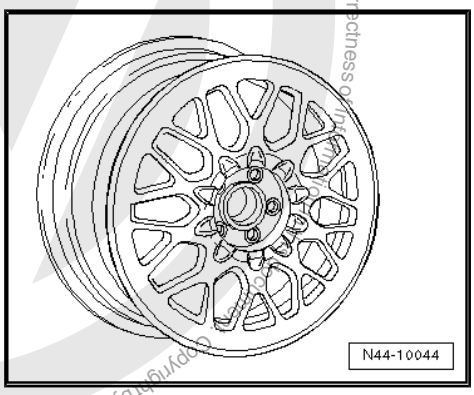

Protected by copyright. Copying for private or commercial purposes, in part or in whole, is not permitted unless authorised by Volkswagen AG. Volkswagen AG does not guarantee or accept any liability with respect to the correctness of information. Copyright by Volkswagen AG.
satelettronica

1H0 601 025 S- Wheel and tyre combination ⇒ page 123

Size:	$6^1/_2$ J x 15
Wheel offset in mm:	43
Wheel load in kg:	490
Number of wheel bolt holes:	5

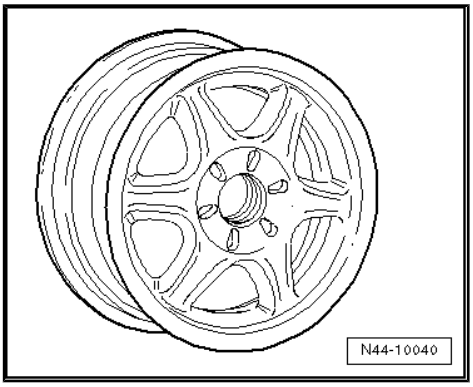

1H0 601 025 AB - Wheel and tyre combination ⇒ page 123

Size:	$6^1/_2$ J x 15
Wheel offset in mm:	43
Wheel load in kg:	510
Number of wheel bolt holes:	5

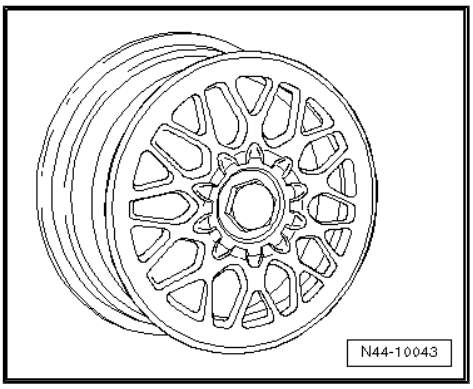

1H0 601 025 T - Wheel and tyre combination ⇒ page 123

Size:	$6^1/_2$ J x 15
Wheel offset in mm:	43
Wheel load in kg:	490
Number of wheel bolt holes:	5

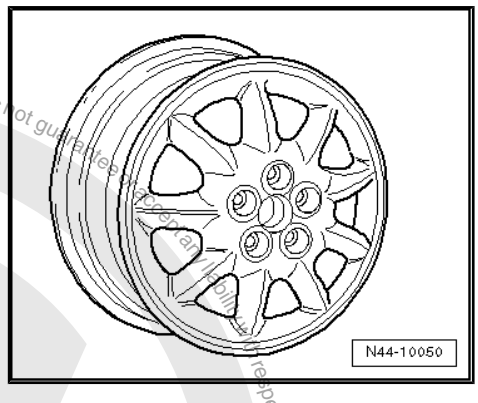

1H0 601 025 AF - Wheel and tyre combination ⇒ page 123

Size:	$6^1/_2$ J x 15
Wheel offset in mm:	43
Wheel load in kg:	490
Number of wheel bolt holes:	5

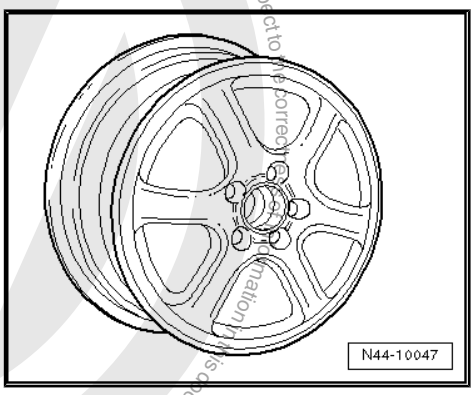

Protected by copyright. Copying for private or commercial purposes, in part or in whole, is not permitted unless authorised by Volkswagen AG. Volkswagen AG does not guarantee or assume any liability with respect to the correctness of information in this document. Copyright by Volkswagen AG.
satelettronica

1H0 601 025 AG - Wheel and tyre combination ⇒ page 123

Size:	$6^1/_2$ J x 15
Wheel offset in mm:	43
Wheel load in kg:	500
Number of wheel bolt holes:	5

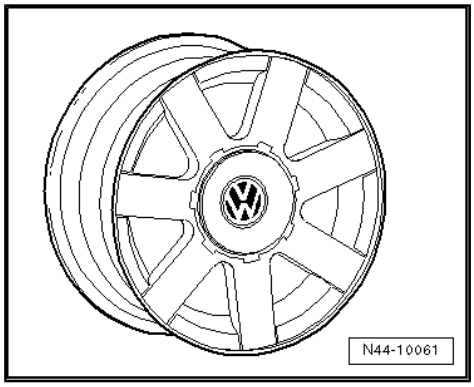

10.2.5 7 J x 16

Golf GTI 85 kW, Golf GTI 16V, Golf VR6

All special models „20 Years GTI“

> ⚠ **Caution**
>
> *Observe the allocation of wheels and tyres to the respective engines, which are listed in the overview table* ⇒ page 121 *.*

1H0 601 025 AH - Wheel and tyre combination ⇒ page 124

Size:	7 J x 16
Wheel offset in mm:	43
Wheel load in kg:	500
Number of wheel bolt holes:	5

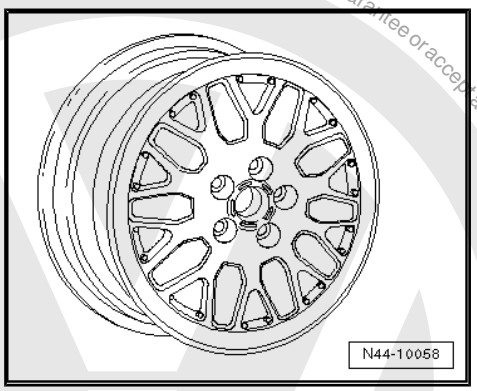

Protected by copyright. Copying for private or commercial purposes, in part or in whole, is not permitted unless authorised by Volkswagen AG. Volkswagen AG does not guarantee or accept any liability with respect to the correctness of information in this document. Copyright by Volkswagen AG.
satelettronica

11 Golf model year 1998 through model year 2004, Golf R32, Golf Anniversary GTI

General

Volkswagen vehicles are built according to the latest findings in safety engineering. To keep it that way, we recommend the use of genuine Volkswagen spare parts only. You can recognise this by the VW Audi logo and by the part number. It has been established that these parts are reliable, safe and suitable.

Despite constant appraisal of the market, we cannot assess other products on these points, even when in isolated cases they have been passed by official inspectors or have been granted official approval. Therefore, we cannot, of course, assume any liability if these products are installed.

> ⚠ WARNING
>
> *The products from Volkswagen genuine parts and Votex genuine accessories may differ in fitting requirements, torque specifications and so on.*
>
> *Always follow the respective fitting and operating instructions.*

The wheel and tyre combinations or changes listed in the vehicle tables refer exclusively to Volkswagen Genuine wheels. Approval of wheel and tyre combinations or a change to wheels from the accessories trade is not possible with the parts certificate attached here.

> ⚠ WARNING
>
> *The fitting instructions and torque specifications for wheels from Votex genuine accessories may differ from those intended for wheels from Volkswagen genuine parts.*
>
> *Therefore, always observe the torque settings for the wheel bolts as well as the respective fitting and operating instructions.*

11.1 Golf, Golf 4Motion, type 1J from model year 1998 through model year 2004

Appendix 2 to Parts Certificate 1958/04

Type Approval No.: e1*96/79*0071*00 to e1*96/79*0071*09

Type Approval No.: e1*98/14*0071*10 to e1*98/14*0071*30

Type Approval No.: e1*2001/116*0071*31 through e1*2001/116*0071*36

Overview

Model engine output	Tyres	Tyre size	Wheel	Offset in mm	Snow chains	Remarks
1.4l 55 kW petrol engine;	Standard tyres through 12/01	175/80 R 14 88T	6 J x 14 ⇒ page 138	38	Yes	
1.9l 50 kW diesel engines	Standard tyres arom 01/02	195/65 R 15 91T	6 J x 15 ⇒ page 139	38	Yes	General notes on winter tyres

Protected by copyright. Copying for private or commercial purposes, in part or in whole, is not permitted unless authorised by Volkswagen AG. Volkswagen AG does not guarantee or accept any liability with respect to the correctness of information in this document. Copyright by Volkswagen AG.

satelettronica

Model engine output	Tyres	Tyre size	Wheel	Off-set in mm	Snow chains	Remarks
	Modification	195/65 R15 91T	6 J x 15 ⇒ page 139	38	Yes	Tyre makes recommended by Volkswagen: ◆ Summer tyres ⇒ page 367 ◆ All-season tyres ⇒ page 381 ◆ Winter tyres ⇒ page 390
		205/55 R 16 91H	$6^1/_2$ J x 16 ⇒ page 143	42	No	
		225/45 R 17 91W	7 J x 17 ⇒ page 147	38	No	
	Winter tyres	175/80 R 14 88Q/T	6 J x 14 ⇒ page 138	38	Yes	
		205/55 R 16 91T/H	$5^1/_2$ J x 16 ⇒ page 142	36	Yes	
1.6l 74 kW, 75 kW, 77 kW petrol engines	Standard tyres	175/80 R 14 88H	6 J x 14 ⇒ page 138	38	Yes	The 225/45 R 17 tyre may be mounted on the 7 J x 17 or the $7^1/_2$ J x 17 rim only if the listed conditions ⇒ page 150 are fulfilled!
	Modification	195/65 R 15 91H	6 J x 15 ⇒ page 139	38	Yes	
		205/55 R 16 91H	$6^1/_2$ J x 16 ⇒ page 143	42	No	The adhesive weights for balancing must be attached to the inner side of the rim of $6^1/_2$ J x 16 aluminium wheels!
		225/45 R 17 91W	7 J x 17 ⇒ page 147	38	No	
		225/45 R 17 91W	$7^1/_2$ J x 17 ⇒ page 150	38	No	4Motion vehicles: Snow chains are permitted on the front wheels only.
	Winter tyres	175/80 R 14 88Q/T	6 J x 14 ⇒ page 138	38	Yes	
		205/55 R 16 91T/H	$5^1/_2$ J x 16 ⇒ page 142	36	Yes	
1.9l 66 kW TDI	Standard tyres	195/65 R 15 91T	6 J x 15 ⇒ page 139	38	Yes	
	Modification	205/55 R 16 91H	$6^1/_2$ J x 16 ⇒ page 143	42	No	
		225/45 R 17 91W	7 J x 17 ⇒ page 147	38	No	

Protected by copyright. Copying for private or commercial purposes, in part or in whole, is not permitted unless authorised by Volkswagen AG. Volkswagen AG does not guarantee or accept any liability with respect to the correctness of information in this document. Copyright by Volkswagen AG.
sateletronica

Model engine output	Tyres	Tyre size	Wheel	Off-set in mm	Snow chains	Remarks
		225/45 R 17 91W	7 1/2 J x 17 ⇒ page 150	38	No	
	Winter tyres	195/65 R 15 91Q/T	6 J x 15 ⇒ page 139	38	Yes	
		205/55 R 16 91T/H	5 1/2 J x 16 ⇒ page 142	36	Yes	
1.9l 74 kW, 81 kW, 85 kW TDI; 2.0l 85 kW petrol engine; 1.6l 81 kW petrol engine	Standard tyres	195/65 R 15 91H	6 J x 15 ⇒ page 139	38	Yes	
	Modification	205/55 R 16 91H	6 1/2 J x 16 ⇒ page 143	42	No	
		225/45 R 17 91W	7 J x 17 ⇒ page 147	38	No	
		225/45 R 17 91W	7 1/2 J x 17 ⇒ page 150	38	No	
	Winter tyres	195/65 R 15 91Q/T	6 J x 15 ⇒ page 139	38	Yes	
		205/55 R 16 91T/H	5 1/2 J x 16 ⇒ page 142	36	Yes	
1.8l 92 kW; 1.8l 110 kW; 2.3l 110 kW petrol engines; 1.9l 96 kW TDI; 1.9l 110 kW TDI	Standard tyres	195/65 R 15 91V	6 J x 15 ⇒ page 139	38	Yes	
	Modification	205/55 R 16 91V	6 1/2 J x 16 ⇒ page 143	42	No	
		225/45 R 17 91W	7 J x 17 ⇒ page 147	38	No	
		225/45 R 17 91W	7 1/2 J x 17 ⇒ page 150	38	No	
	Winter tyres	195/65 R 15 91Q/T	6 J x 15 ⇒ page 139	38	Yes	
		205/55 R 16 91T/H	5 1/2 J x 16 ⇒ page 142	36	Yes	
1.8l 132 kW; 2.3l 125 kW	Standard tyres	205/55 R 16 91W	6 1/2 J x 16 ⇒ page 145	42	No	
	Modification	205/55 R 16 91V	6 1/2 J x 16 ⇒ page 145	42	No	

Protected by copyright. Copying for private or commercial purposes, in part or in whole, is not permitted unless authorised by Volkswagen AG. Volkswagen AG does not guarantee or assume any liability with respect to the correctness of information in this document. Copyright by Volkswagen AG.

satelettronica

Model engine output	Tyres	Tyre size	Wheel	Off-set in mm	Snow chains	Remarks
		225/45 R 17 91W	7 J x 17 ⇒ page 147	38	No	
		225/45 R 17 91W	7 1/2 J x 17 ⇒ page 150	38	No	
	Winter tyres	205/55 R 16 91T/H	5 1/2 J x 16 ⇒ page 142	36	Yes	
2.8l 150 kW	Standard tyres	205/55 R 16 91W	6 1/2 J x 16 ⇒ page 145	42	No	
	Modification	225/45 R 17 91W	7 J x 17 ⇒ page 147	38	No	
		225/45 R 17 91W	7 1/2 J x 17 ⇒ page 150	38	No	
	Winter tyres	205/55 R 16 91T/H	5 1/2 J x 16 ⇒ page 142	36	Yes	

Tyre pressures can be found on the inside of the fuel tank flap or in ⇒ Maintenance ; Booklet 37 .

11.2 Wheel allocation for Golf, Golf 4Motion, type 1J from model year 1998 through model year 2004

Explanation of information on wheels

Wheel bolt torque settings ⇒ Running gear, axles, steering - front and four-wheel drive; Rep. gr. 44 ; Wheel bolt torque settings

Pitch circle diameter	100 mm
Number of wheel bolt holes:	5

11.2.1 6 J x 14

Caution

Observe the allocation of wheels and tyres to the respective engines, which are listed in the overview table ⇒ page 135 .

Protected by copyright. Copyright by Volkswagen AG. Volkswagen AG does not guarantee or accept any liability with respect to the correctness of information in this document. Copyright by Volkswagen AG. Commercial purposes, in part or in whole, is not permitted unless authorized by Volkswagen AG.

satelettronica

For Golf 55 kW, 74 kW, 77 kW petrol engines, 50 kW diesel

1J0 601 027 J - Wheel and tyre combination ⇒ page 135

Size:	6 J x 14
Wheel offset in mm:	38
Wheel load in kg:	520

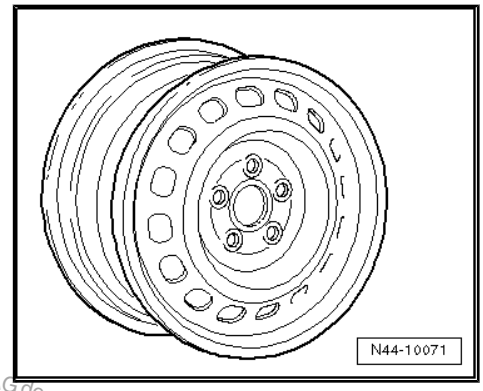

1J0 601 027 N, 1J0 601 027 P - Wheel and tyre combination
⇒ page 135

Size:	6 J x 14
Wheel offset in mm:	38
Wheel load in kg:	520

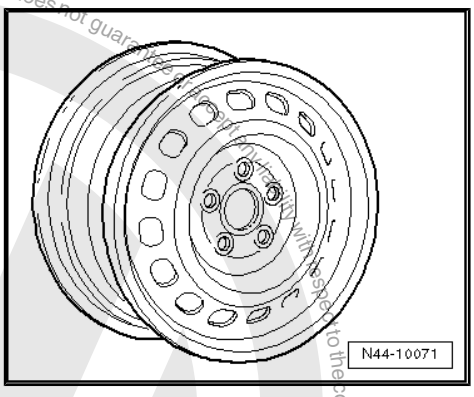

11.2.2 6 J x 15

Caution

Observe the allocation of wheels and tyres to the respective engines, which are listed in the overview table *⇒ page 135* *.*

For Golf 55 kW, 74 kW, 77 kW petrol engines, 50 kW diesel

1J0 601 025 N, 1J0 601 025 AG - Wheel and tyre combination
⇒ page 135

Note

These rims are allowed only for vehicles with a maximum permitted axle load of 1000 kg.

Size:	6 J x 15
Wheel offset in mm:	38
Wheel load in kg:	500

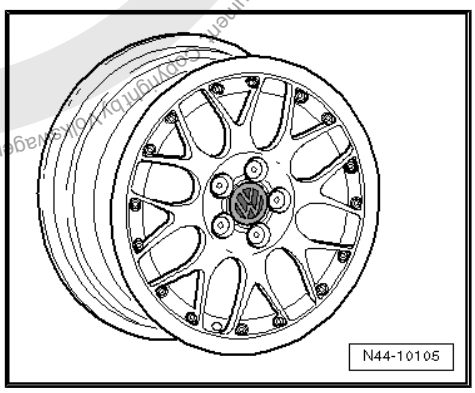

For vehicles through 96 kW and petrol engines to 110 kW

Protected by copyright. Copying for private or commercial purposes, in part or in whole, is not permitted unless authorised by Volkswagen AG. Volkswagen AG does not guarantee or assume liability with respect to the correctness of information in this document. Copyright by Volkswagen AG.

satelettronica

1J0 601 027 - Wheel and tyre combination ⇒ page 135

Size:	6 J x 15
Wheel offset in mm:	38
Wheel load in kg:	550

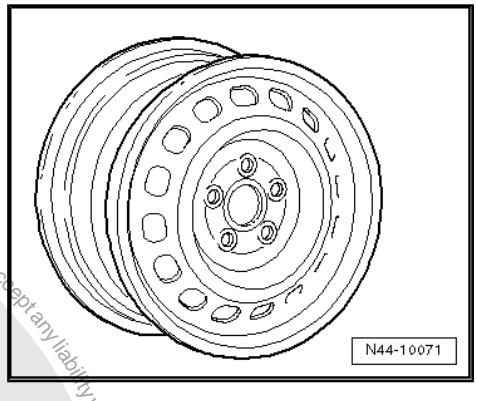

1J0 601 027 H, 1J0 601 027 Q - Wheel and tyre combination ⇒ page 135

Size:	6 J x 15
Wheel offset in mm:	38
Wheel load in kg:	550

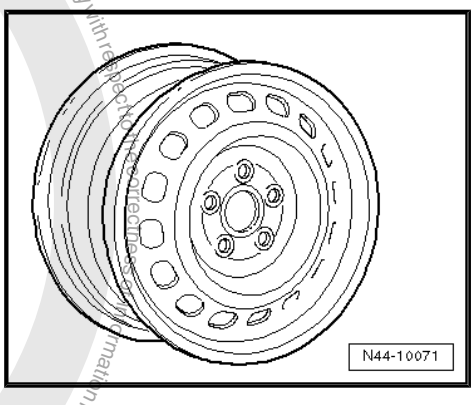

1J0 601 025 B, 1J0 601 025 AA - Wheel and tyre combination ⇒ page 135

Note

These rims are allowed only for vehicles with a maximum permitted axle load of 1000 kg.

Size:	6 J x 15
Wheel offset in mm:	38
Wheel load in kg:	500

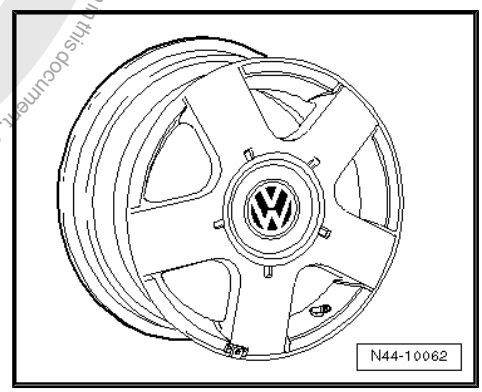

1J0 601 025 Q - Wheel and tyre combination ⇒ page 135

Size:	6 J x 15
Wheel offset in mm:	38
Wheel load in kg:	530

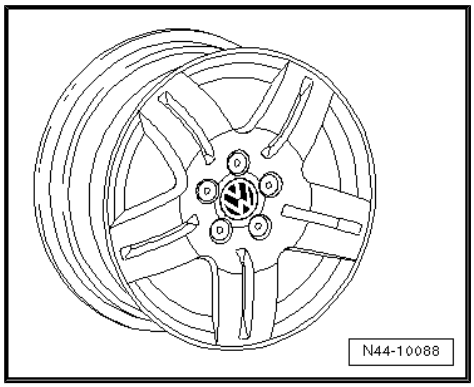

Protected by copyright. Copying for private or commercial purposes, partially or in whole, is not permitted unless authorised by Volkswagen AG. Volkswagen AG does not guarantee or accept any liability with respect to the correctness of information in this document. Copyright by Volkswagen AG.
satelettronica

1J0 601 025 AK - Wheel and tyre combination ⇒ page 135

Size:	6 J x 15
Wheel offset in mm:	38
Wheel load in kg:	580

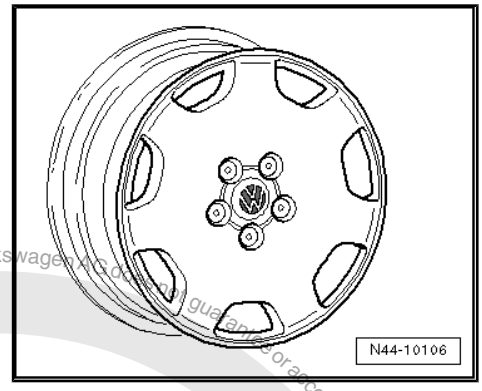

1C0 601 025 F - Wheel and tyre combination ⇒ page 135

Size:	6 J x 15
Wheel offset in mm:	38
Wheel load in kg:	550

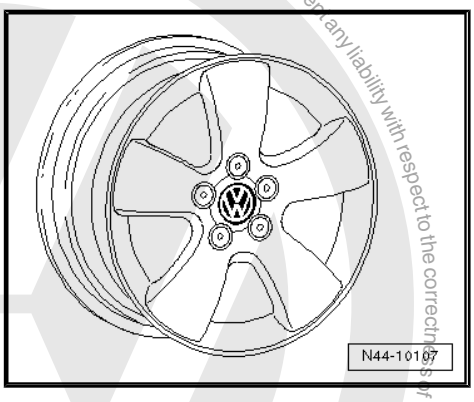

1J0 601 025 P, 1J0 601 025 AL - Wheel and tyre combination ⇒ page 135

Size:	6 J x 15
Wheel offset in mm:	38
Wheel load in kg:	550

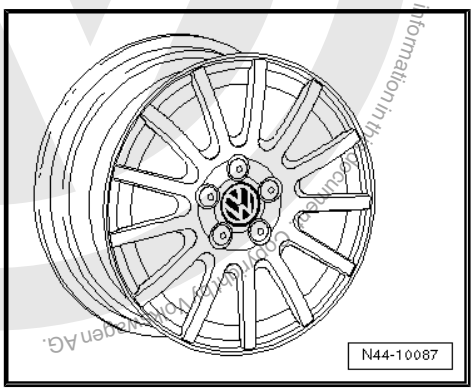

1J0 601 025 BD - Wheel and tyre combination ⇒ page 135

Size:	6 J x 15
Wheel offset in mm:	38
Wheel load in kg:	580

For vehicles with 110 kW TDI and petrol engines 1.8l 132 kW, 2.3l 125 kW, 2.8l 150 kW

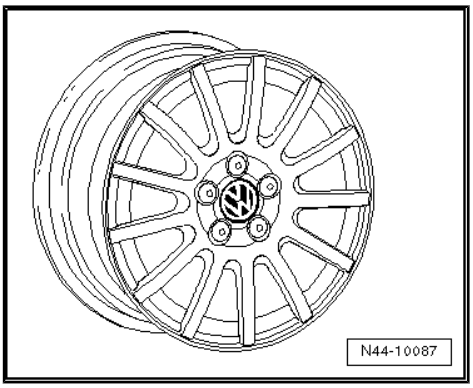

Protected by copyright. Copying for private or commercial purposes, in part or in whole, is not permitted unless authorised by Volkswagen AG. Volkswagen AG does not guarantee or accept any liability with respect to the correctness of information in this document.
Copyright by Volkswagen AG.
satelettronica

1J0 601 025 P, 1J0 601 025 AL - Wheel and tyre combination
⇒ page 137

Size:	6 J x 15
Wheel offset in mm:	38
Wheel load in kg:	550

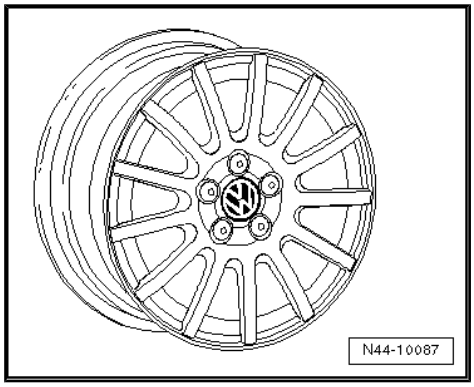

1J0 601 025 BD - Wheel and tyre combination ⇒ page 137

Size:	6 J x 15
Wheel offset in mm:	38
Wheel load in kg:	580

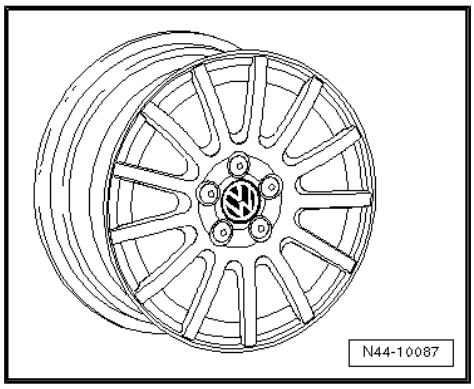

11.2.3 5$^1/_2$ J x 16

Caution

Observe the allocation of wheels and tyres to the respective engines, which are listed in the overview table ⇒ page 135 *.*

For vehicles through 96 kW and petrol engines to 110 kW

For vehicles with 110 kW TDI and petrol engines 1.8l 132 kW, 2.3l 125 kW, 2.8l 150 kW

Snow tyres

1J0 601 025 M, 1J0 601 025 AF - Wheel and tyre combination
⇒ page 136

Size:	5$^1/_2$ J x 16
Wheel offset in mm:	36
Wheel load in kg:	550

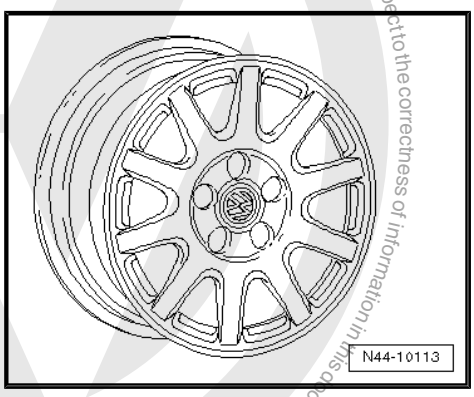

Protected by copyright. Copying for private or commercial purposes, in part or in whole, is not permitted unless authorised by Volkswagen AG. Volkswagen AG does not guarantee or accept any liability with respect to the correctness of information in this document. Copyright by Volkswagen AG.
satelettronica

1J0 601 025 AP - Wheel and tyre combination ⇒ page 136

Size:	$5^1/_2$ J x 16
Wheel offset in mm:	36
Wheel load in kg:	550

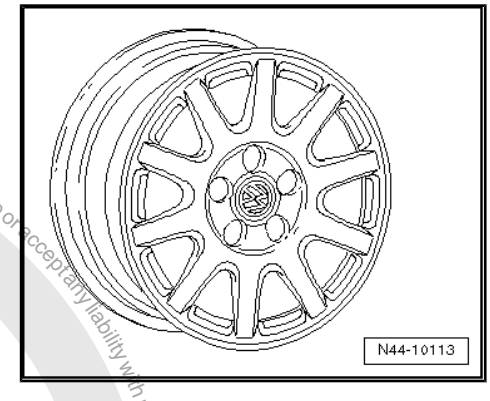

11.2.4 $6^1/_2$ J x 16

Caution

Observe the allocation of wheels and tyres to the respective engines, which are listed in the overview table ⇒ page 135 *.*

For vehicles through 96 kW and petrol engines to 110 kW

1C0 601 025 A, 1C0 601 025 D - Wheel and tyre combination
⇒ page 136

Note

These rims are allowed only for vehicles with a maximum permitted axle load of 1000 kg.

Size:	$6^1/_2$ J x 16
Wheel offset in mm:	42
Wheel load in kg:	500

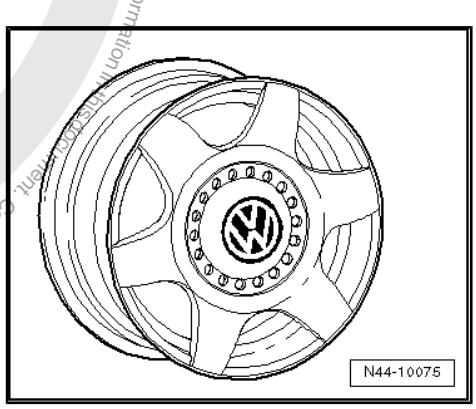

1J0 601 027 L, 1J0 601 027 R - Wheel and tyre combination
⇒ page 136

Size:	$6^1/_2$ J x 16
Wheel offset in mm:	42
Wheel load in kg:	550

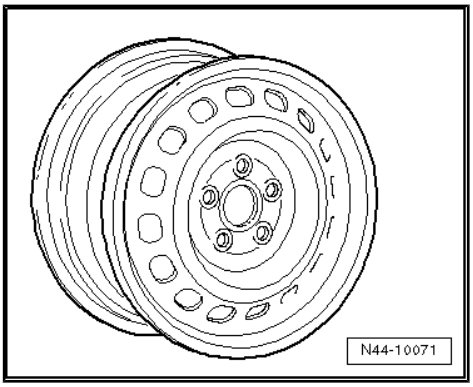

Protected by copyright. Copying for private or commercial purposes, in part or in whole, is not permitted unless authorised by Volkswagen AG. Volkswagen AG does not guarantee or accept any liability with respect to the correctness of information in this document. Copyright by Volkswagen AG.
satelettronica

1J0 601 025 F, 1J0 601 025 AC - Wheel and tyre combination
⇒ page 136

Size:	$6^1/_2$ J x 16
Wheel offset in mm:	42
Wheel load in kg:	530

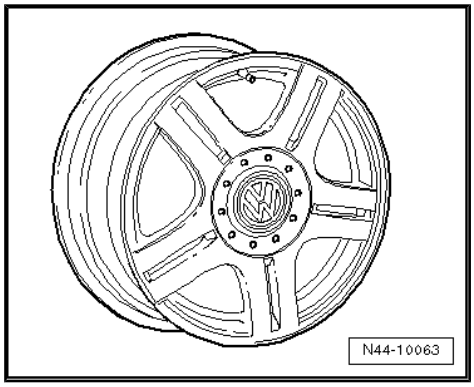

1J0 601 025 E, 1J0 601 025 AD - Wheel and tyre combination
⇒ page 136

Size:	$6^1/_2$ J x 16
Wheel offset in mm:	42
Wheel load in kg:	530

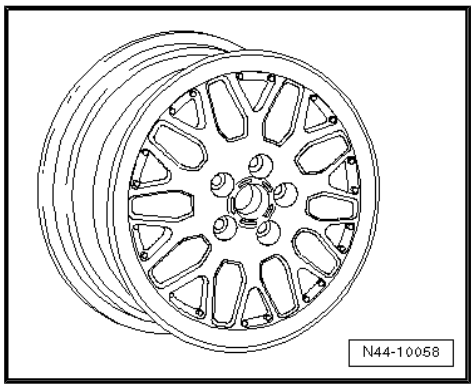

1J0 601 025 H, 1J0 601 025 AH - Wheel and tyre combination
⇒ page 136

Size:	$6^1/_2$ J x 16
Wheel offset in mm:	42
Wheel load in kg:	530

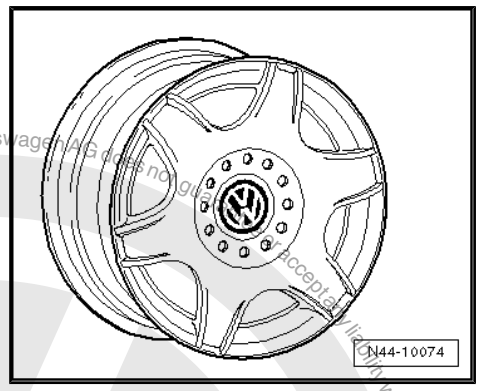

1J0 601 025 L, 1J0 601 025 AE - Wheel and tyre combination
⇒ page 136

Size:	$6^1/_2$ J x 16
Wheel offset in mm:	42
Wheel load in kg:	550

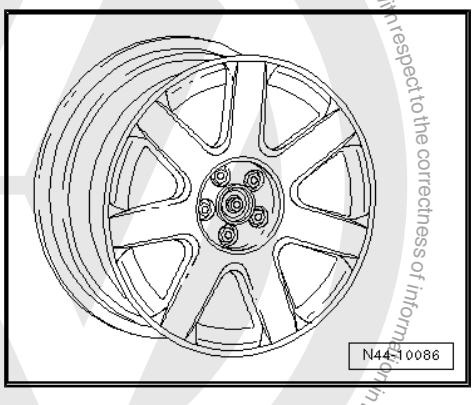

Protected by copyright. Copying for private or commercial purposes, in part or in whole, is not permitted unless authorised by Volkswagen AG. Volkswagen AG does not guarantee or accept any liability with respect to the correctness of information in this document. Copyright by Volkswagen AG.
satelettronica

1C0 601 025 G - Wheel and tyre combination ⇒ page 136

Size:	$6^1/_2$ J x 16
Wheel offset in mm:	42
Wheel load in kg:	550

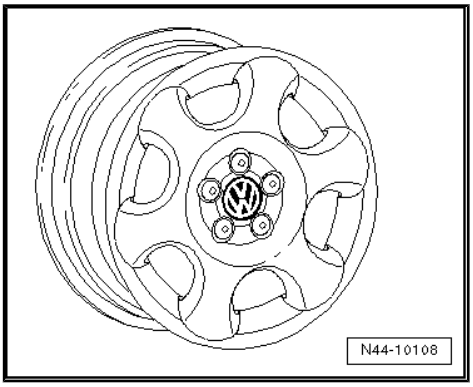

1C0 601 025 H - Wheel and tyre combination ⇒ page 136

Size:	$6^1/_2$ J x 16
Wheel offset in mm:	42
Wheel load in kg:	550

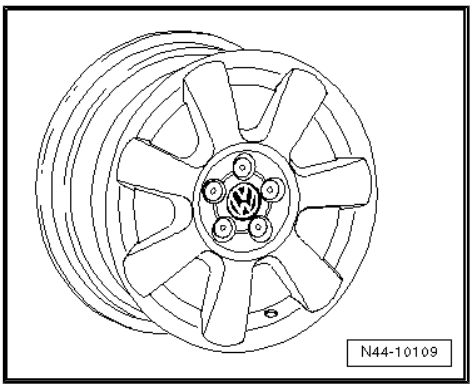

1J0 601 025 R, 1J0 601 025 AN - Wheel and tyre combination ⇒ page 136

Size:	$6^1/_2$ J x 16
Wheel offset in mm:	42
Wheel load in kg:	550

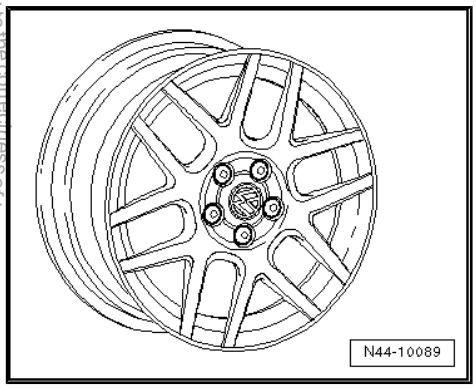

1J0 601 025 T, 1J0 601 025 AJ - Wheel and tyre combination ⇒ page 136

Size:	$6^1/_2$ J x 16
Wheel offset in mm:	42
Wheel load in kg:	550

For vehicles with 110 kW TDI and petrol engines 1.8l 132 kW, 2.3l 125 kW, 2.8l 150 kW

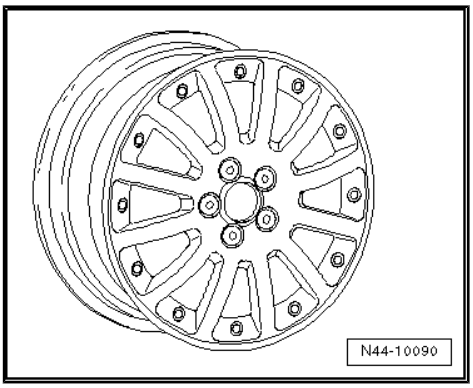

Protected by copyright. Copyright by Volkswagen AG. Volkswagen AG does not guarantee or accept any liability with respect to the correctness of information in this document. Copyright by Volkswagen AG. Protected by copyright. Copying for private or commercial purposes, in part or in whole, is not permitted unless authorised by Volkswagen AG.
satelettronica

1J0 601 027 L, 1J0 601 027 R - Wheel and tyre combination
⇒ page 137

Size:	$6^1/_2$ J x 16
Wheel offset in mm:	42
Wheel load in kg:	550

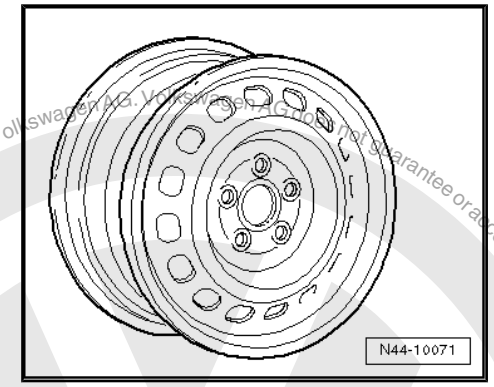

1J0 601 025 F, 1J0 601 025 AC - Wheel and tyre combination
⇒ page 137

Size:	$6^1/_2$ J x 16
Wheel offset in mm:	42
Wheel load in kg:	530

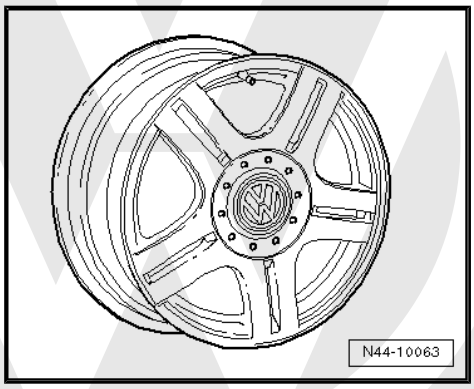

1J0 601 025 L, 1J0 601 025 AE - Wheel and tyre combination
⇒ page 137

Size:	$6^1/_2$ J x 16
Wheel offset in mm:	42
Wheel load in kg:	550

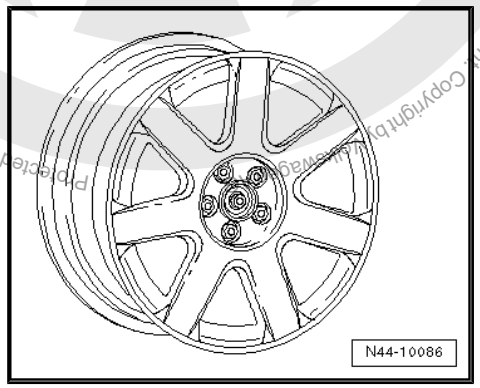

1J0 601 025 AN, 1J0 601 025 R - Wheel and tyre combination
⇒ page 137

Size:	$6^1/_2$ J x 16
Wheel offset in mm:	42
Wheel load in kg:	550

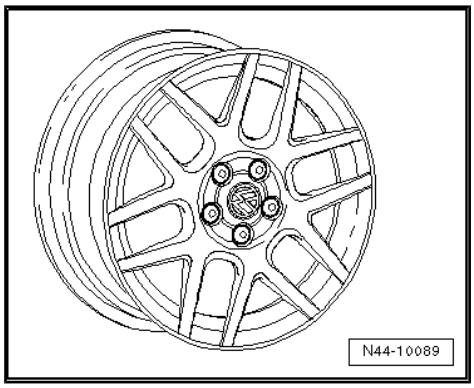

Protected by copyright. Copyright by Volkswagen AG. Volkswagen AG does not guarantee or accept any liability with respect to the correctness of information in this document. Copying for private or commercial purposes, in part or in whole, is not permitted unless authorised by Volkswagen AG.
satelettronica

1J0 601 025 T, 1J0 601 025 AJ - Wheel and tyre combination ⇒ page 137

Size:	$6^1/_2$ J x 16
Wheel offset in mm:	42
Wheel load in kg:	550

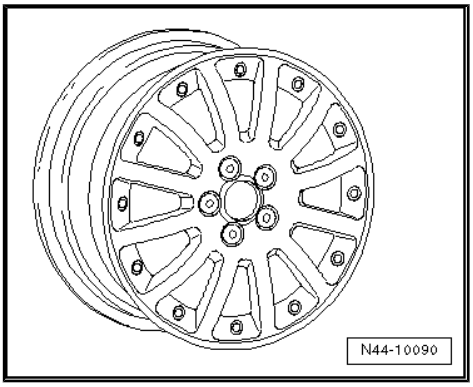

1C0 601 025 G - Wheel and tyre combination ⇒ page 137

Size:	$6^1/_2$ J x 16
Wheel offset in mm:	42
Wheel load in kg:	550

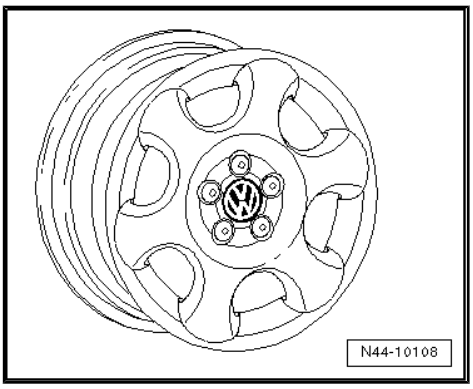

1C0 601 025 H - Wheel and tyre combination ⇒ page 137

Size:	$6^1/_2$ J x 16
Wheel offset in mm:	42
Wheel load in kg:	550

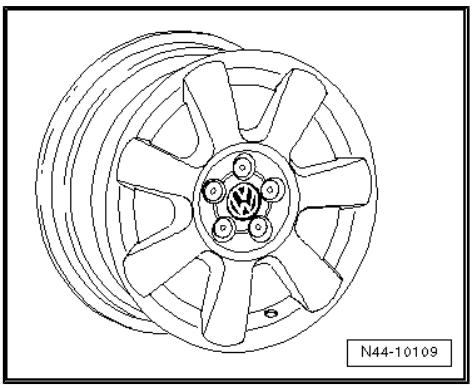

11.2.5 7 J x 17

The following wheels are permitted only if the stated conditions ⇒ page 150 **are fulfilled.**

> ⚠ **Caution**
>
> *Observe the allocation of wheels and tyres to the respective engines, which are listed in the overview table* ⇒ page 135 *.*

Protected by copyright. Copying for private or commercial purposes, in part or in whole, is not permitted unless authorised by Volkswagen AG. Volkswagen AG does not guarantee or accept any liability with respect to the correctness of information in this document. Copyright by Volkswagen AG.

satelettronica

1J0 601 025 J, 1J0 601 025 S - Wheel and tyre combination
⇒ page 136

Size:	7 J x 17
Wheel offset in mm:	38
Wheel load in kg:	580

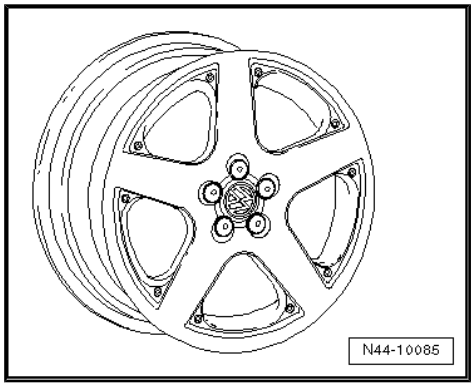

1J0 601 025 AB - Wheel and tyre combination ⇒ page 136

Size:	7 J x 17
Wheel offset in mm:	38
Wheel load in kg:	550

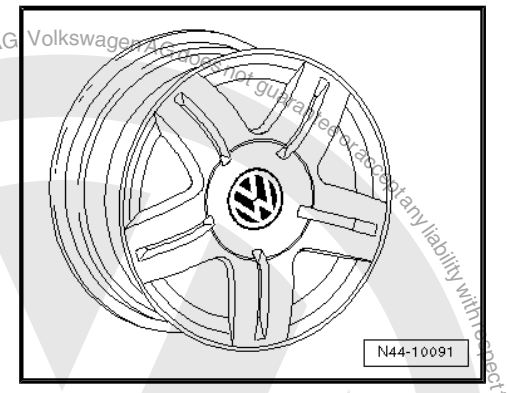

1C0 601 025 B, 1C0 601 025 E - Wheel and tyre combination
⇒ page 136

Size:	7 J x 17
Wheel offset in mm:	38
Wheel load in kg:	550

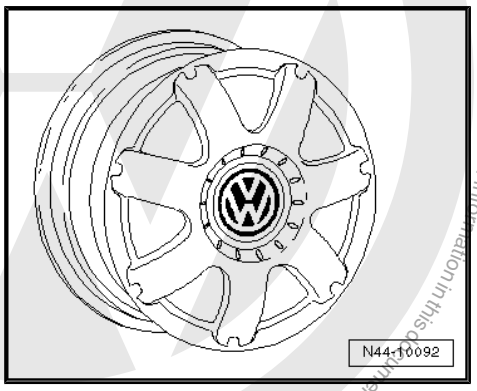

1C0 601 025 J - Wheel and tyre combination ⇒ page 136

Size:	7 J x 17
Wheel offset in mm:	38
Wheel load in kg:	550

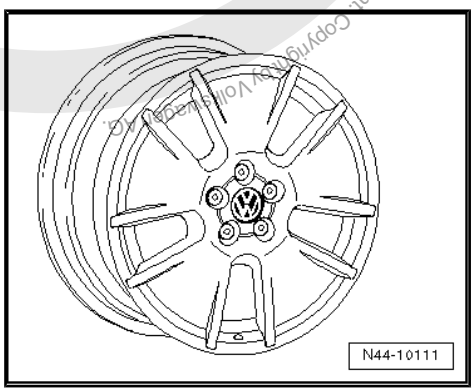

Protected by copyright. Copying for private or commercial purposes, in part or in whole, is not permitted unless authorised by Volkswagen AG. Volkswagen AG does not guarantee or accept any liability with respect to the correctness of information in this document. Copyright by Volkswagen AG.
satelettronica

1C0 601 025 K, 1C0 601 025 Q - Wheel and tyre combination ⇒ page 136

Alloy wheels with exchangeable trim elements

Size:	7 J x 17
Wheel offset in mm:	38
Wheel load in kg:	550

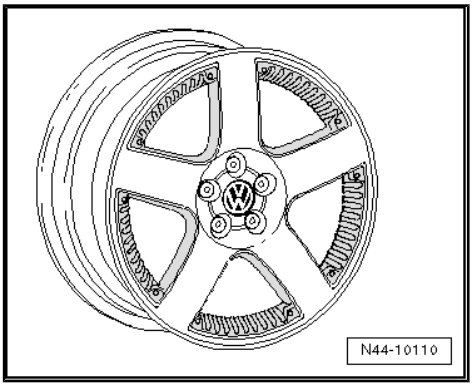

1J0 601 025 BE - Wheel and tyre combination ⇒ page 136

Size:	7 J x 17
Wheel offset in mm:	38
Wheel load in kg:	550

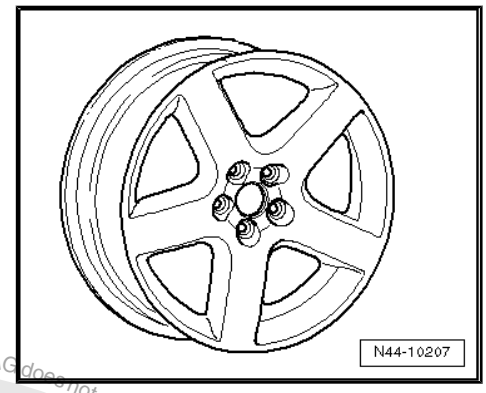

1J0 601 025 AS - Wheel and tyre combination ⇒ page 136

Size:	7 J x 17
Wheel offset in mm:	38
Wheel load in kg:	550

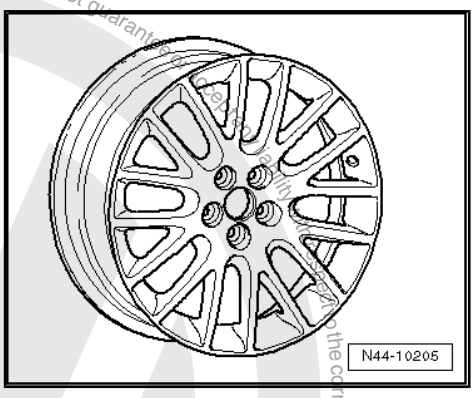

1C0 601 025 M - Wheel and tyre combination ⇒ page 136

Size:	7 J x 17
Wheel offset in mm:	38
Wheel load in kg:	550

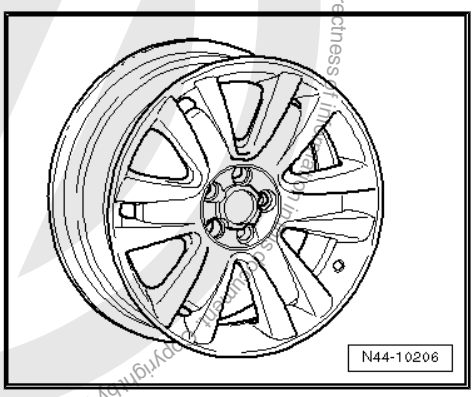

Protected by copyright. Copying for private or commercial purposes, in part or in whole, is not permitted unless authorised by Volkswagen AG. Volkswagen AG does not guarantee or assume any liability with respect to the correctness of information. Copyright by Volkswagen AG.
satelettronica

11.2.6 7 1/2 J x 17

The following wheels are permitted only if the stated conditions ⇒ page 150 are fulfilled.

> **Caution**
>
> *Observe the allocation of wheels and tyres to the respective engines, which are listed in the overview table ⇒ page 135 .*

1J0 601 025 BF - Wheel and tyre combination ⇒ page 136

Size:	7 1/2 J x 17
Wheel offset in mm:	38
Wheel load in kg:	550

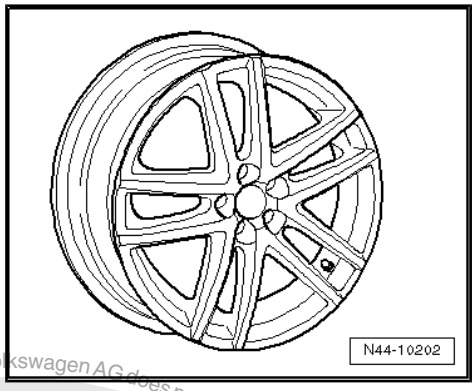

1J0 601 025 BH - Wheel and tyre combination ⇒ page 136

Size:	7 1/2 J x 17
Wheel offset in mm:	38
Wheel load in kg:	560

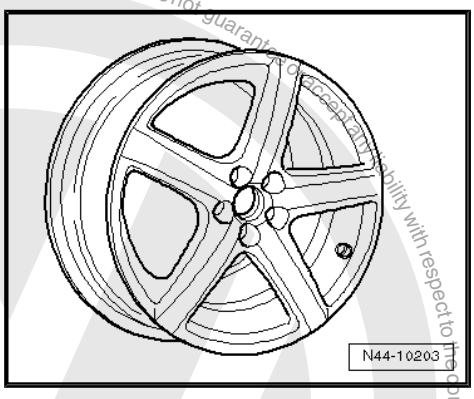

11.3 Conditions for fitting 17" wheels and tyres to Golf model year 1998 through model year 2004

17" wheels with 225/45 R 17 are possible only:

1. For vehicles from model year 2001.

2. If 17" sports running gear and a steering box with reduced steering arm travel are installed in the vehicle

Allocation of steering box PR No. to engine:	
PR No. of steering box	**Engine**
QZ 3[7)]	1.8l; 2.0l; 2.3l petrol engines; 1.9l diesel engines
QZ 4[7)]	Through 1.6l petrol engines
QZ 5[7)]	VR6 (US version); VR6 4Motion

7) Replacement part numbers ⇒ Electronic parts catalogue „ETKA“

3. If tyres with a maximum width of 218 mm are used.

Protected by copyright. Copyright by Volkswagen AG. Volkswagen AG does not guarantee or accept any liability with respect to the correctness of information in this document. Copyright by Volkswagen AG. Reproduction in part or in whole, is not permitted unless authorised by Volkswagen AG.
satelettronica

4. If snow chains are not used.

Maximum width of 17" tyres

If a vehicle is retrofitted with 17" tyres or if existing 17" tyres are renewed, use only tyres with a maximum width -a- which does not exceed 218 mm during use [8].

8) The measured width of the tyre including lettering on 7 J x 17 or $7^1/_2$ J x 17 and at the specified tyre pressure.

If wider tyres are used, under certain circumstances, the tyres may contact the front axle and the bodywork while the car is being driven.

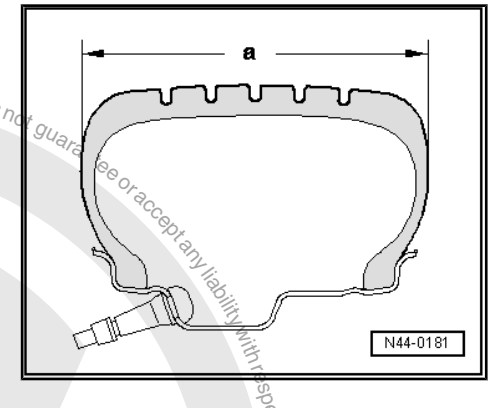

11.4 Golf R32, type 1J model year 2003 through model year 2005

Appendix 2 to Parts Certificate 1958/04

Type Approval No.: e1*98/14*0071*26 to e1*98/14*0071*30

Type Approval No.: e1*2001/116*0071*31 through e1*2001/116*0071*36

Overview

Model engine output	Tyres	Tyre size	Wheel	Off-set in mm	Snow chains	Remarks
3.2l 177 kW	Standard tyres	225/40 R 18 88Y	$7^1/_2$ J x 18 ⇒ page 153	38	No	General notes on winter tyres
	Modification	225/45 R 17 91W	$7^1/_2$ J x 17 ⇒ page 152	38	No	Tyre makes recommended by Volkswagen: ◆ Summer tyres ⇒ page 370 ◆ Winter tyres ⇒ page 391 Tyre pressures for winter tyres ⇒ page 151 Snow chains may be fitted on the front wheels only!
	Winter tyres	205/50 R 17 93T/H	$5^1/_2$ J x 17 ⇒ page 152	36	Yes	

Tyre pressures can be found on the inside of the fuel tank flap or in ⇒ Maintenance ; Booklet 37 .

Tyre pressures for winter tyres:

Tyre pressure M + S:	
Part load front:	2.3
Part load rear:	2.1
Full load front:	2.5
Full load rear:	2.9

Protected by copyright. Copying for private or commercial purposes, in part or in whole, is not permitted unless authorised by Volkswagen AG. Volkswagen AG does not guarantee or accept any liability with respect to the correctness of information in this document. Copyright by Volkswagen AG.
satelettronica

Protected by copyright. Copying for private or commercial purposes, in part or in whole, is not permitted unless authorised by Volkswagen AG. Volkswagen AG does not guarantee or accept any liability with respect to the correctness of information in this document. Copyright by Volkswagen AG.

11.5 Wheel allocation for Golf R32, type 1J model year 2003 through model year 2005

Explanation of information on wheels

Wheel bolt torque settings ⇒ Running gear, axles, steering - front and four-wheel drive; Rep. gr. 44 ; Wheel bolt torque settings

Pitch circle diameter	100 mm
Number of wheel bolt holes:	5

11.5.1 $5^1/_2$ J x 17

Caution

Observe the allocation of wheels and tyres to the respective engines, which are listed in the overview table ⇒ page 151 .

1J0 601 025 BB - Wheel and tyre combination ⇒ page 151

M + S wheel with snow chain

Size:	$5^1/_2$ J x 17
Wheel offset in mm:	36
Wheel load in kg:	550

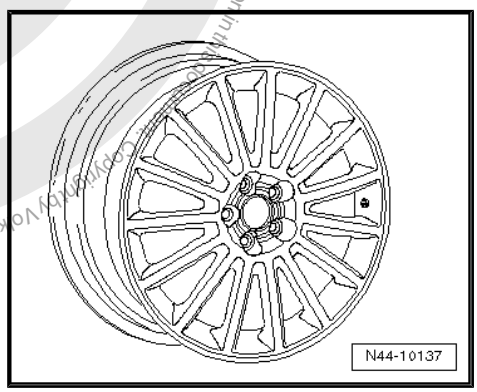

11.5.2 $7^1/_2$ J x 17

Caution

Observe the allocation of wheels and tyres to the respective engines, which are listed in the overview table ⇒ page 151 .

1J0 601 025 BC - Wheel and tyre combination ⇒ page 151

Note

No snow chains permitted!

Size:	$7^1/_2$ J x 17
Wheel offset in mm:	38
Wheel load in kg:	550

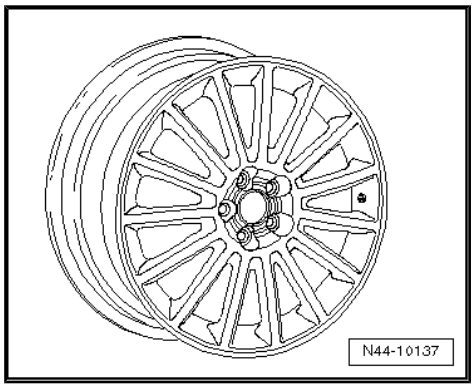

satelettronica

11.5.3 $7^1/_2$ J x 18

Caution

Observe the allocation of wheels and tyres to the respective engines, which are listed in the overview table ⇒ page 151 .

1J0 601 025 BA - Wheel and tyre combination ⇒ page 151

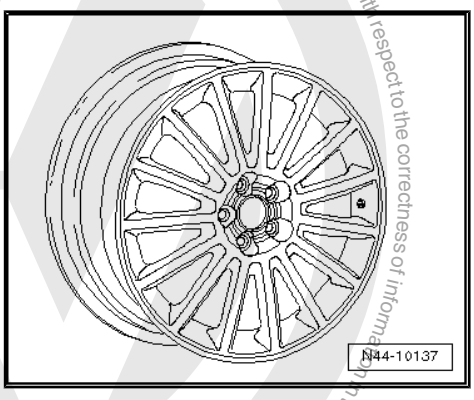

Note

No snow chains permitted!

Size:	$7^1/_2$ J x 18
Wheel offset in mm:	38
Wheel load in kg:	550

11.6 Golf Anniversary GTI, type 1J model year 2002

Appendix 2 to Parts Certificate 1486/03

Type Approval No.: e1*98/14*0071*21 to e1*98/14*0071*24

Overview

Model engine output	Tyres	Tyre size	Wheel	Off-set in mm	Snow chains	Remarks
1.8l 132 kW	Standard tyres	225/40 R 18 88Y	$7^1/_2$ J x 18 ⇒ page 158	38	No	General notes on winter tyres
	Modification	205/55 R 16 91W	$6^1/_2$ J x 16 ⇒ page 154	42	No	Tyre makes recommended by Volkswagen: ◆ Summer tyres ⇒ page 370 ◆ Winter tyres ⇒ page 391
		225/45 R 17 91W	7 J x 17 ⇒ page 156	38	No	
	Winter tyres	205/55 R 16 91T/H	$5^1/_2$ J x 16 ⇒ page 154	36	Yes	Fitting 17" and 18" wheels and tyres is permitted only if the stated conditions ⇒ page 158 are fulfilled. Snow chains may be fitted on the front wheels only!

Tyre pressures can be found on the inside of the fuel tank flap or in ⇒ Maintenance ; Booklet 37 .

11.7 Wheel allocation for Golf Anniversary GTI, type 1J model year 2002

Explanation of information on wheels

Copyright by Volkswagen AG. Volkswagen AG does not guarantee or accept any liability with respect to the correctness of information in this document. Copyright by Volkswagen AG. Protected by copyright. Copying for private or commercial purposes, in part or in whole, is not permitted unless authorised by Volkswagen AG.
satelettronica

Wheel bolt torque settings ⇒ Running gear, axles, steering - front and four-wheel drive; Rep. gr. 44 ; Wheel bolt torque settings

Pitch circle diameter	100 mm
Number of wheel bolt holes:	5

11.7.1 5 1/2 J x 16

Caution

Observe the allocation of wheels and tyres to the respective engines, which are listed in the overview table ⇒ page 153 *.*

Snow tyres

1J0 601 025 M, 1J0 601 025 AF - Wheel and tyre combination ⇒ page 153

Size:	5 1/2 J x 16
Wheel offset in mm:	36
Wheel load in kg:	550

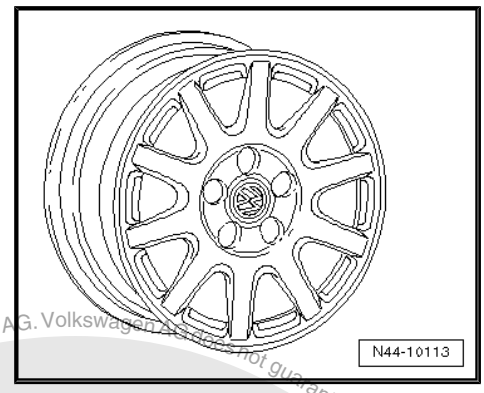

1J0 601 025 AP - Wheel and tyre combination ⇒ page 153

Size:	5 1/2 J x 16
Wheel offset in mm:	36
Wheel load in kg:	550

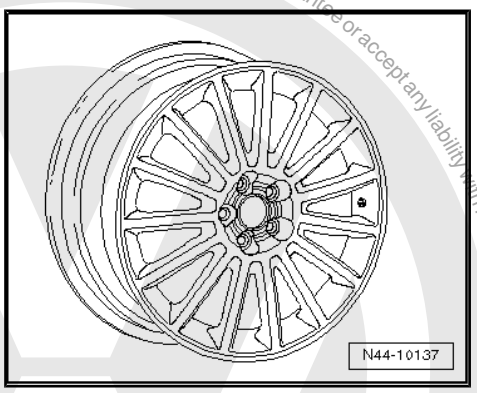

11.7.2 6 1/2 J x 16

1J0 601 027 L, 1J0 601 027 R - Wheel and tyre combination ⇒ page 153

Size:	6 1/2 J x 16
Wheel offset in mm:	42
Wheel load in kg:	550

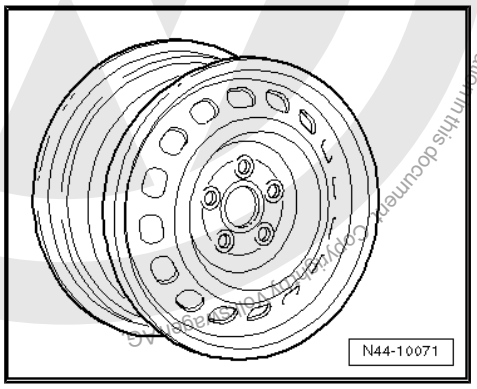

Protected by copyright. Copying for private or commercial purposes, in part or in whole, is not permitted unless authorised by Volkswagen AG. Volkswagen AG does not guarantee or accept any liability with respect to the correctness of information in this document. Copyright by Volkswagen AG.
satelettronica

1J0 601 025 F, 1J0 601 025 AC - Wheel and tyre combination
⇒ page 153

Size:	$6^1/_2$ J x 16
Wheel offset in mm:	42
Wheel load in kg:	530

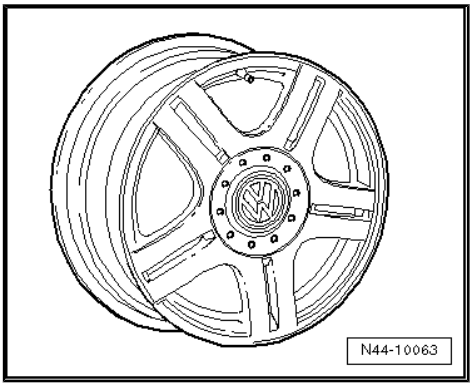

1J0 601 025 L, 1J0 601 025 AE - Wheel and tyre combination
⇒ page 153

Size:	$6^1/_2$ J x 16
Wheel offset in mm:	42
Wheel load in kg:	550

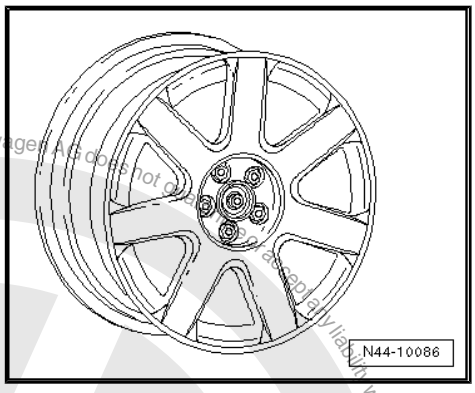

1J0 601 025 R - Wheel and tyre combination ⇒ page 153

Size:	$6^1/_2$ J x 16
Wheel offset in mm:	42
Wheel load in kg:	550

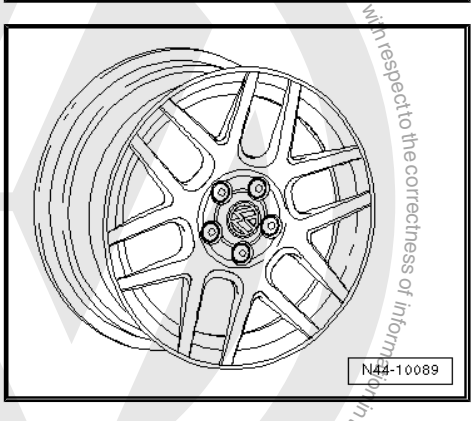

1J0 601 025 T, 1J0 601 025 AJ - Wheel and tyre combination
⇒ page 153

Size:	$6^1/_2$ J x 16
Wheel offset in mm:	42
Wheel load in kg:	550

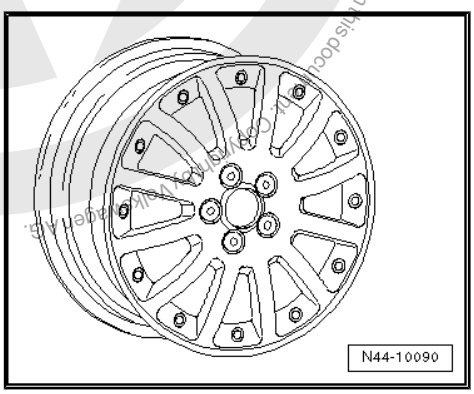

Protected by copyright. Copying for private or commercial purposes, in part or in whole is not permitted unless authorised by Volkswagen AG. Volkswagen AG does not guarantee or accept any liability with respect to the correctness of information in this document. Copyright by Volkswagen AG.
satelettronica

1C0 601 025 G - Wheel and tyre combination ⇒ page 153

Size:	$6^1/_2$ J x 16
Wheel offset in mm:	42
Wheel load in kg:	550

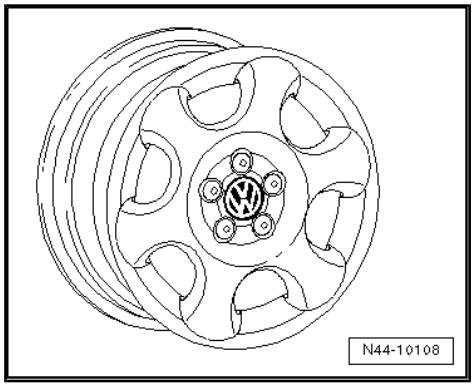

1C0 601 025 H - Wheel and tyre combination ⇒ page 153

Size:	$6^1/_2$ J x 16
Wheel offset in mm:	42
Wheel load in kg:	550

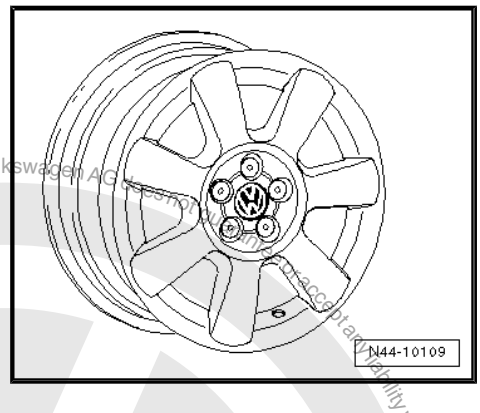

11.7.3 7 J x 17

The following wheels are permitted only if the stated conditions ⇒ page 158 are fulfilled.

> ⚠ **Caution**
>
> *Observe the allocation of wheels and tyres to the respective engines, which are listed in the overview table ⇒ page 153 .*

1J0 601 025 J, 1J0 601 025 S - Wheel and tyre combination ⇒ page 153

Size:	7 J x 17
Wheel offset in mm:	38
Wheel load in kg:	580

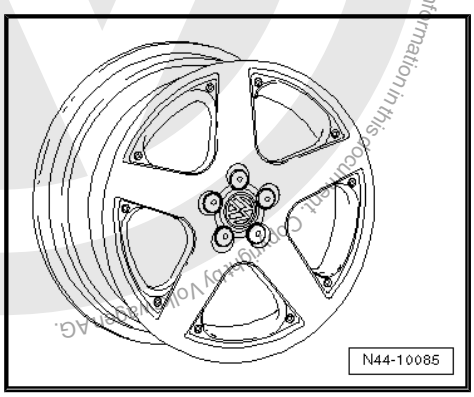

Protected by copyright. Copying for private or commercial purposes, in part or in whole, is not permitted unless authorised by Volkswagen AG. Volkswagen AG does not guarantee or accept any liability with respect to the correctness of information in this document. Copyright by Volkswagen AG.
satelettronica

1J0 601 025 AB - Wheel and tyre combination ⇒ page 153

Size:	7 J x 17
Wheel offset in mm:	38
Wheel load in kg:	550

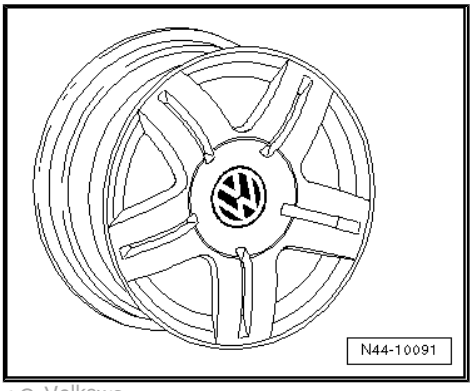

1C0 601 025 B, 1C0 601 025 E - Wheel and tyre combination ⇒ page 153

Size:	7 J x 17
Wheel offset in mm:	38
Wheel load in kg:	550

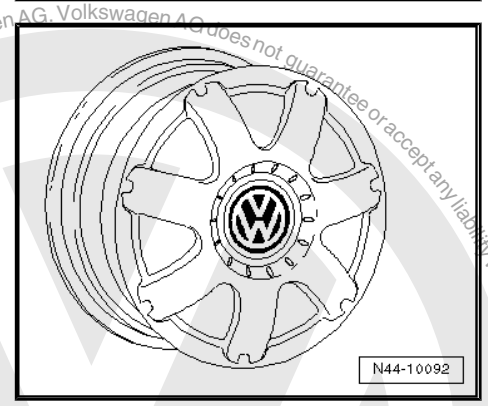

1C0 601 025 J - Wheel and tyre combination ⇒ page 153

Size:	7 J x 17
Wheel offset in mm:	38
Wheel load in kg:	550

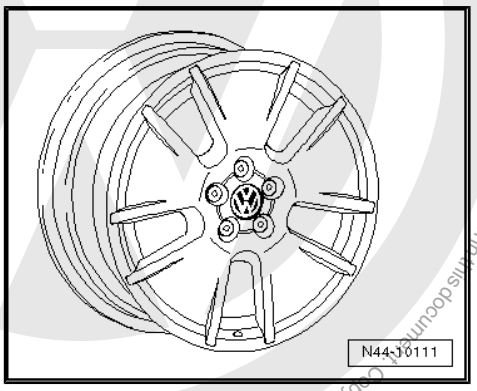

1C0 601 025 K, 1C0 601 025 Q - Wheel and tyre combination ⇒ page 153

Alloy wheels with exchangeable trim elements

Size:	7 J x 17
Wheel offset in mm:	38
Wheel load in kg:	550

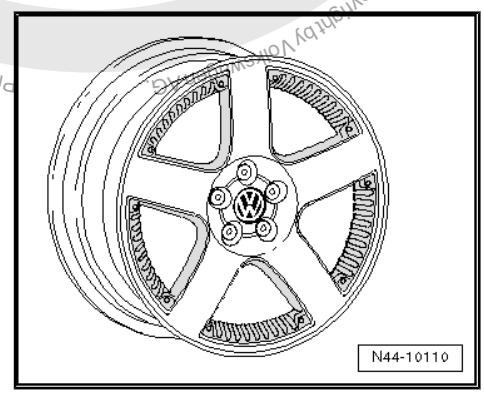

Protected by copyright. Copying for private or commercial purposes, in part or in whole, is not permitted unless authorised by Volkswagen AG. Volkswagen AG does not guarantee or accept any liability with respect to the correctness of information in this document. Copyright by Volkswagen AG.
satelettronica

11.7.4 7 1/2 J x 18

The following wheels are permitted only if the stated conditions ⇒ page 158 are fulfilled.

> ⚠ **Caution**
>
> *Observe the allocation of wheels and tyres to the respective engines, which are listed in the overview table ⇒ page 153 .*

1J0 601 025 AM - Wheel and tyre combination ⇒ page 153

Size:	7 1/2 J x 18
Wheel offset in mm:	38
Wheel load in kg:	475

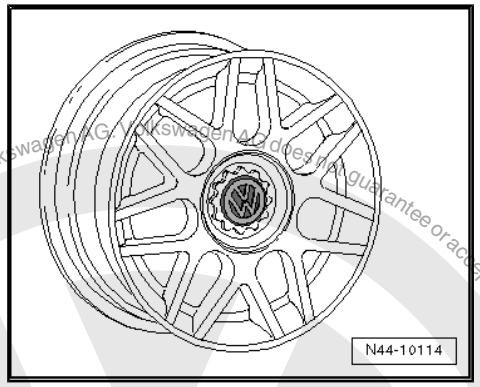

11.8 Conditions for fitting 17" and 18" wheels and tyres of Golf Anniversary GTI

Conditions for fitting 17" wheels and tyres

17" wheels with 225/45 R 17 are possible only:

1. For vehicles from model year 2001.

2. If a steering box with reduced steering arm travel for vehicles with 17" sports running gear is installed.

PR No. of steering box:	QZ 3[9)]

9) Replacement part numbers ⇒ Electronic parts catalogue „ETKA“

3. If tyres with a maximum width of 218 mm are used.

4. If snow chains are not used.

Conditions for fitting 18" wheels and tyres

These vehicles are equipped as standard with a steering gear having reduced steering arm travel and sports running gear. These components cannot be retrofitted on vehicles which were not originally equipped with them.

Maximum width for 17" and 18" tyres

If a vehicle is retrofitted with 17" or 18" tyres or if existing 17" or 18" tyres are renewed, use only tyres which do not exceed the maximum width -a- during use [10)].

Dimension -a- for 17" tyres: 218 mm

Dimension -a- for 18" tyres: 225 mm

10) 1) The measured width of the tyre including lettering fitted on an appropriate wheel at the specified pressure.

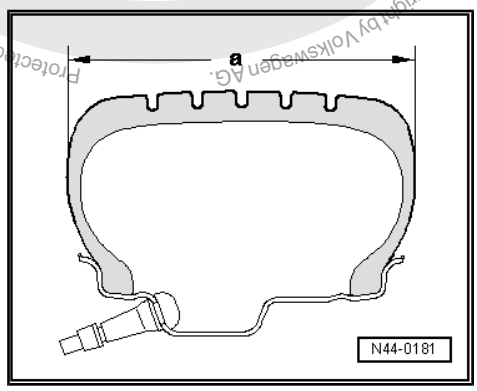

If wider tyres are used, under certain circumstances, the tyres may contact the front axle and the bodywork while the car is being driven.

Protected by copyright. Copying for private or commercial purposes, in part or in whole, is not permitted unless authorised by Volkswagen AG. Volkswagen AG does not guarantee or accept any liability with respect to the correctness of information in this document. Copyright by Volkswagen AG.
satelettronica

12 Golf from model year 2004

General

Volkswagen vehicles are built according to the latest findings in safety engineering. To keep it that way, we recommend the use of genuine Volkswagen spare parts only. You can recognise this by the VW Audi logo and by the part number. It has been established that these parts are reliable, safe and suitable.

Despite constant appraisal of the market, we cannot assess other products on these points, even when in isolated cases they have been passed by official inspectors or have been granted official approval. Therefore, we cannot, of course, assume any liability if these products are installed.

> ⚠ **WARNING**
>
> *The products from Volkswagen genuine parts and Votex genuine accessories may differ in fitting requirements, torque specifications and so on.*
>
> *Always follow the respective fitting and operating instructions.*

The wheel and tyre combinations or changes listed in the vehicle tables refer exclusively to Volkswagen Genuine wheels. Approval of wheel and tyre combinations or a change to wheels from the accessories trade is not possible with the parts certificate attached here.

> ⚠ **WARNING**
>
> *The fitting instructions and torque specifications for wheels from Votex genuine accessories may differ from those intended for wheels from Volkswagen genuine parts.*
>
> *Therefore, always observe the torque settings for the wheel bolts as well as the respective fitting and operating instructions.*

12.1 Golf, Golf 4Motion, type 1K from model year 2004 through model year 2006

Attachment to parts certificate 1901/05

Type Approval No.: e1*2001/116*0242*00 through e1*2001/116*0242*10

Overview

Model engine output	Tyres	Tyre size	Wheel	Off-set in mm	Snow chains	Remarks
1.4l 55 kW; 1.4l 66 kW; petrol engines;	Standard tyres	195/65 R 15 91T	6 J x 15 ⇒ page 161	47	Yes	General notes on winter tyres
1.9l 66 kW TDI; 2.0l 55 kW SDI diesel engines	Modification	195/65 R 15 91H/V	6 J x 15 ⇒ page 161	47	Yes	Tyre makes recommended by Volkswagen: ◆ Summer tyres ⇒ page 373 ◆ All-season tyres ⇒ page 383 ◆ Winter tyres ⇒ page 393
		195/65 R 15 91T/H/V	6 1/2 J x 15 ⇒ page 162	50	Yes	

Protected by copyright. Copying for private or commercial purposes, in part or in whole, is not permitted unless authorised by Volkswagen AG. Volkswagen AG does not guarantee or accept any liability with respect to the correctness of information in this document. Copyright by Volkswagen AG.
satelettronica

Model engine output	Tyres	Tyre size	Wheel	Off-set in mm	Snow chains	Remarks
		205/60 R 15 91H/V	6 J x 15 ⇒ page 161	47	Yes	
		205/55 R 16 91H/V/W	6 1/2 J x 16 ⇒ page 163	50	No	
		225/45 R 17 91H/V/W	7 J x 17 ⇒ page 164	54	No	
		225/45 R 17 91H/V/W	7 1/2 J x 17 ⇒ page 166	51	No	
		225/40 R 18 92Y* ⇒ page 160	7 1/2 J x 18 ⇒ page 167	51	No	* The 225/40 R 18 92Y tyre on the 7 1/2 J x 18 ET 51 rim is permitted only on vehicles with sports running gear and rear axle camber of -1°45' !
	Winter tyres	195/65 R 15 91Q/T/H	6 J x 15 ⇒ page 161	47	Yes	
		205/55 R 16 91Q/T/H	6 J x 16 ⇒ page 163	50	Yes	
1.6l 75 kW; 1.6l 85 kW; petrol engines; 1.9l 77 kW TDI diesel engines	Standard tyres	195/65 R 15 91H	6 J x 15 ⇒ page 161	47	Yes	
	Modification	195/65 R 15 91V	6 J x 15 ⇒ page 161	47	Yes	
		195/65 R 15 91H/V	6 1/2 J x 15 ⇒ page 162	50	Yes	
		205/60 R 15 91H/V	6 J x 15 ⇒ page 161	47	Yes	
		205/55 R 16 91H/V/W	6 1/2 J x 16 ⇒ page 163	50	No	
		225/45 R 17 91H/V/W	7 J x 17 ⇒ page 164	54	No	
		225/45 R 17 91H/V/W	7 1/2 J x 17 ⇒ page 166	51	No	
		225/40 R 18 92Y* ⇒ page 160	7 1/2 J x 18 ⇒ page 167	51	No	
	Winter tyres	195/65 R 15 91Q/T/H	6 J x 15 ⇒ page 161	47	Yes	
		205/55 R 16 91Q/T/H	6 J x 16 ⇒ page 163	50	Yes	

Copyright by Volkswagen AG. Volkswagen AG does not guarantee or accept any liability with respect to the correctness of information in this document. Copyrighted by copyright. Unauthorised commercial purposes, in part or in whole, is not permitted unless authorised by Volkswagen AG.
satelettronica

Model engine output	Tyres	Tyre size	Wheel	Off-set in mm	Snow chains	Remarks
2.0l 110 kW petrol engine	Standard tyres	205/55 R 16 91V	6 1/2 J x 16 ⇒ page 163	50	No	
2.0l 100 kW TDI; 2.0l 103 kW TDI; diesel engines	Modification	195/65 R 15 91V	6 J x 15 ⇒ page 161	47	Yes	
		195/65 R 15 91V	6 1/2 J x 15 ⇒ page 162	50	Yes	
		205/60 R 15 91V	6 J x 15 ⇒ page 161	47	Yes	
		205/55 R 16 91W	6 1/2 J x 16 ⇒ page 163	50	No	
		225/45 R 17 91V/W	7 J x 17 ⇒ page 164	54	No	
		225/45 R 17 91H/V/W	7 1/2 J x 17 ⇒ page 166	51	No	
		225/40 R 18 92Y* ⇒ page 160	7 1/2 J x 18 ⇒ page 167	51	No	
	Winter tyres	195/65 R 15 91Q/T/H	6 J x 15 ⇒ page 161	47	Yes	
		205/55 R 16 91Q/T/H	6 J x 16 ⇒ page 163	50	Yes	

Tyre pressures can be found on the inside of the fuel tank flap or in ⇒ Maintenance ; Booklet 38 .

12.2 Wheel allocation for Golf, Golf 4Motion, type 1K from model year 2004 through model year 2006

Explanation of information on wheels

Wheel bolt torque settings ⇒ Running gear, axles, steering; Rep. gr. 44 ; Wheel bolt torque settings .

Pitch circle diameter	112 mm
Number of wheel bolt holes:	5

12.2.1 6 J x 15

> ⚠ **Caution**
>
> *Observe the allocation of wheels and tyres to the respective engines, which are listed in the overview table ⇒ page 159 .*

Protected by copyright. Copying for private or commercial purposes, in part or in whole, is not permitted unless authorised by Volkswagen AG. Volkswagen AG does not guarantee or accept any liability with respect to the correctness of information in this document. Copyright by Volkswagen AG.

satelettronica

1K0 601 027 C - Wheel and tyre combination ⇒ page 159

Size:	6 J x 15
Wheel offset in mm:	47
Wheel load in kg:	600

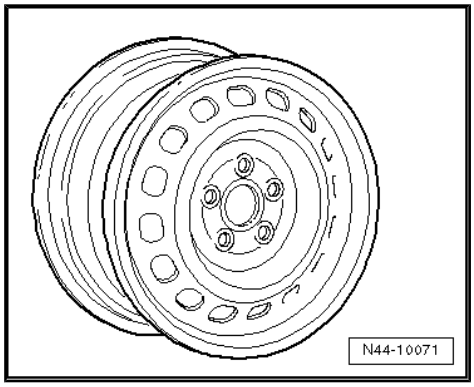

2K0 601 027 - Wheel and tyre combination ⇒ page 159

Size:	6 J x 15
Wheel offset in mm:	47
Wheel load in kg:	625

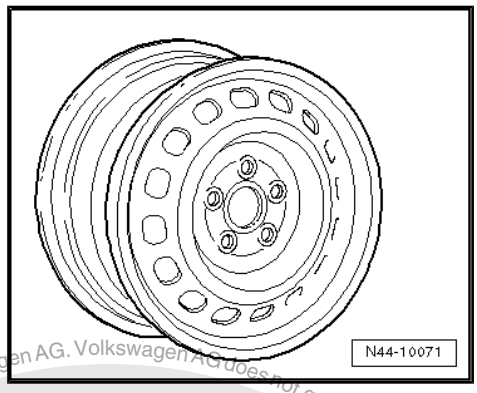

12.2.2 6 1/2 J x 15

Caution

Observe the allocation of wheels and tyres to the respective engines, which are listed in the overview table ⇒ page 159 *.*

1K0 601 025 A - Wheel and tyre combination ⇒ page 159

Size:	6 1/2 J x 15
Wheel offset in mm:	50
Wheel load in kg:	600

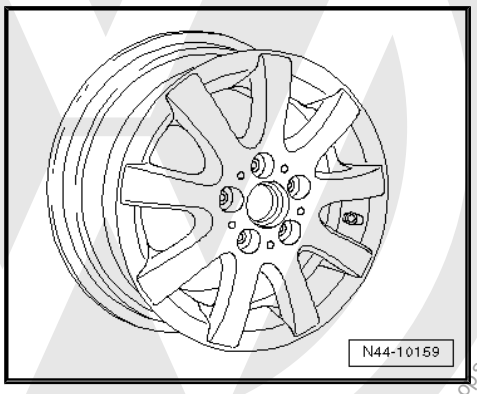

1K0 601 025 F - Wheel and tyre combination ⇒ page 159

Size:	6 1/2 J x 15
Wheel offset in mm:	50
Wheel load in kg:	615

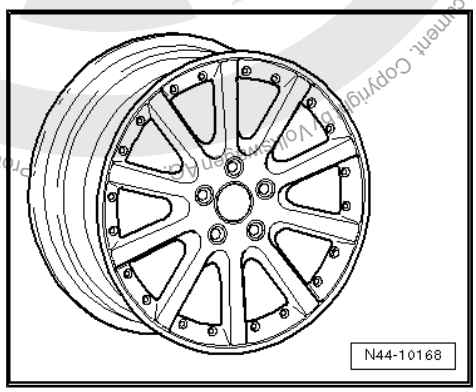

Protected by copyright. Copying for private or commercial purposes, in part or in whole, is not permitted unless authorised by Volkswagen AG. Volkswagen AG does not guarantee or accept any liability with respect to the correctness of information in this document. Copyright by Volkswagen AG.
satelettronica

12.2.3 6 J x 16

Caution

Observe the allocation of wheels and tyres to the respective engines, which are listed in the overview table ⇒ page 159 *.*

Snow tyres

8P0 601 027 - Wheel and tyre combination ⇒ page 160

Size:	6 J x 16
Wheel offset in mm:	50
Wheel load in kg:	600

Use the following wheel bolt caps for the wheel bolts:

- 1K0.601.173 (4 per wheel)
- 1K0.601.173 (1 per wheel)

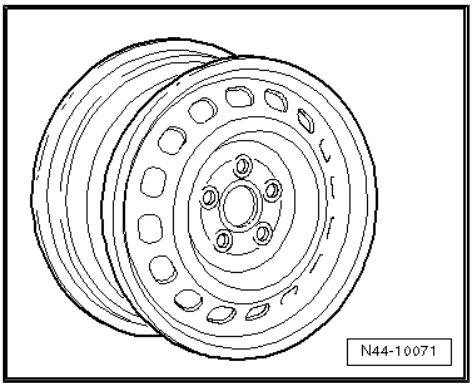

1K0 601 025 Q - Wheel and tyre combination ⇒ page 160

Size:	6 J x 16 EH2
Wheel offset in mm:	50
Wheel load in kg:	615

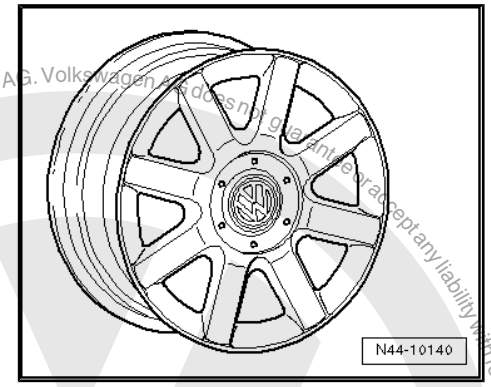

12.2.4 6$^1/_2$ J x 16

Caution

Observe the allocation of wheels and tyres to the respective engines, which are listed in the overview table ⇒ page 159 *.*

1K0 601 027 A - Wheel and tyre combination ⇒ page 160

Size:	6$^1/_2$ J x 16
Wheel offset in mm:	50
Wheel load in kg:	615

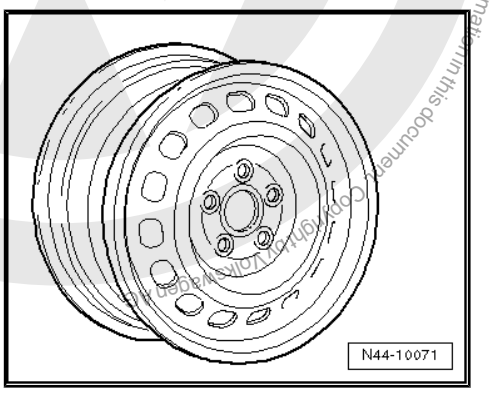

Protected by copyright. Copying for private or commercial purposes, in part or in whole, is not permitted unless authorised by Volkswagen AG. Volkswagen AG does not give a guarantee or accept any liability with respect to the correctness of information in this document. Copyright by Volkswagen AG.
satelettronica

1T0 601 025 C - Wheel and tyre combination ⇒ page 160

Size:	$6^1/_2$ J x 16
Wheel offset in mm:	50
Wheel load in kg:	615

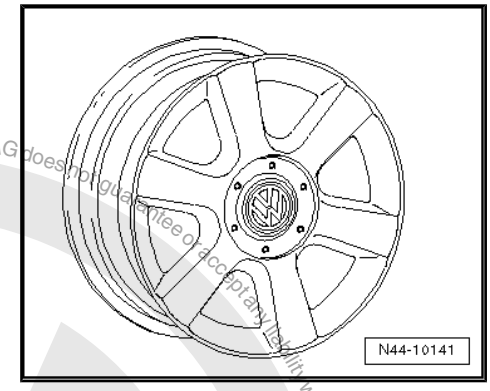

1K0 601 025 P - Wheel and tyre combination ⇒ page 160

Size:	$6^1/_2$ J x 16
Wheel offset in mm:	50
Wheel load in kg:	615

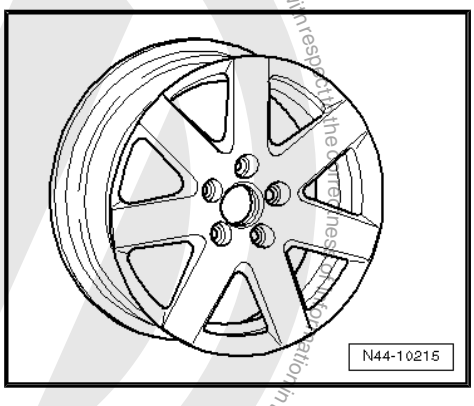

1K0 601 025 R - Wheel and tyre combination ⇒ page 160

Size:	$6^1/_2$ J x 16
Wheel offset in mm:	50
Wheel load in kg:	615

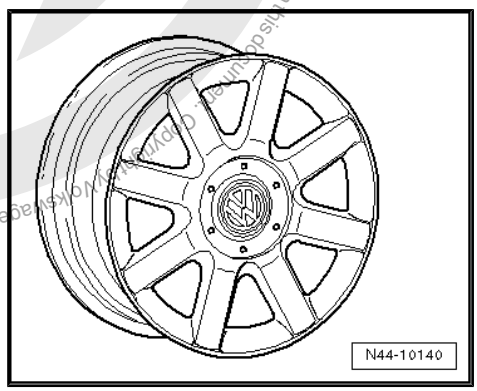

12.2.5 7 J x 17

Caution

Observe the allocation of wheels and tyres to the respective engines, which are listed in the overview table *⇒ page 159* *.*

1K0 601 025 B - Wheel and tyre combination ⇒ page 160

Size:	7 J x 17
Wheel offset in mm:	54
Wheel load in kg:	615

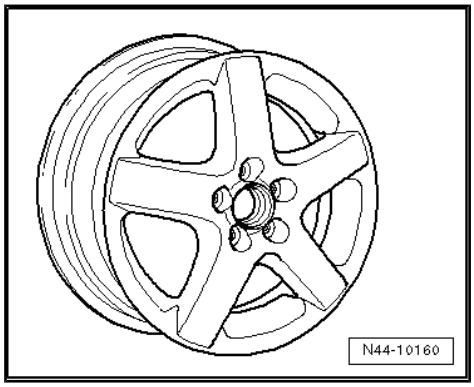

Protected by copyright. Copying for private or commercial purposes, in part or in whole is not permitted unless authorised by Volkswagen AG. Volkswagen AG does not guarantee or accept any liability with respect to the correctness of information in this document. Copyright by Volkswagen AG.

satelettronica

1K0 601 025 C - Wheel and tyre combination ⇒ page 160

Size:	7 J x 17
Wheel offset in mm:	54
Wheel load in kg:	615

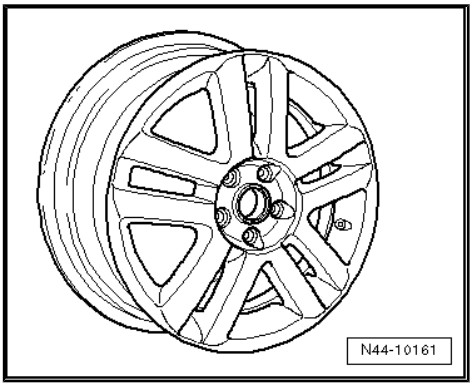

1K0 601 025 J - Wheel and tyre combination ⇒ page 160

Size:	7 J x 17
Wheel offset in mm:	54
Wheel load in kg:	615

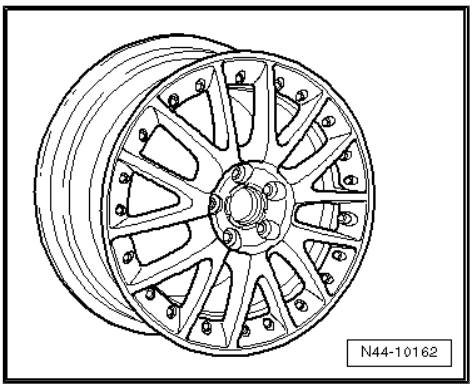

1K0 601 025 K - Wheel and tyre combination ⇒ page 160

Size:	7 J x 17
Wheel offset in mm:	54
Wheel load in kg:	615

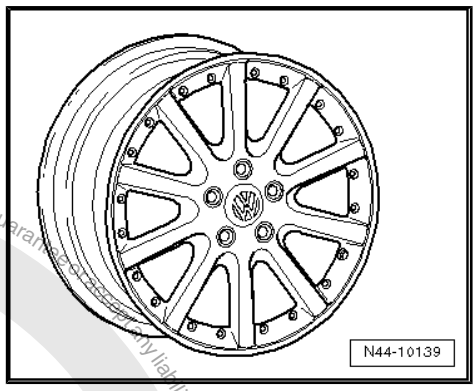

1K0 601 025 M - Wheel and tyre combination ⇒ page 160

Size:	7 J x 17
Wheel offset in mm:	54
Wheel load in kg:	615

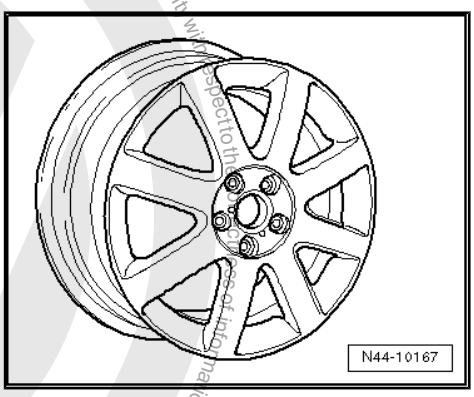

Protected by copyright. Copying for private or commercial purposes, in part or in whole, is not permitted unless authorised by Volkswagen AG. Volkswagen AG does not guarantee or accept any liability with respect to the correctness of information in this document. Copyright by Volkswagen AG.
satelettronica

1K0 601 025 T - Wheel and tyre combination ⇒ page 160

Size:	7 J x 17
Wheel offset in mm:	54
Wheel load in kg:	615

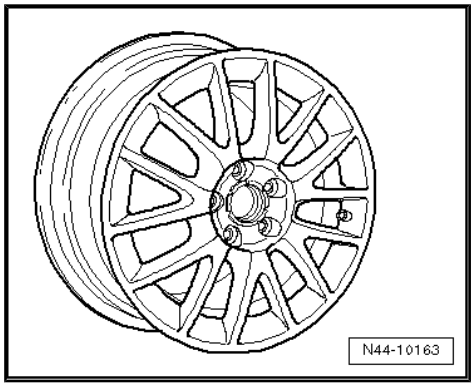

1K0 601 025 AF - Wheel and tyre combination ⇒ page 160

Size:	7 J x 17
Wheel offset in mm:	54
Wheel load in kg:	630

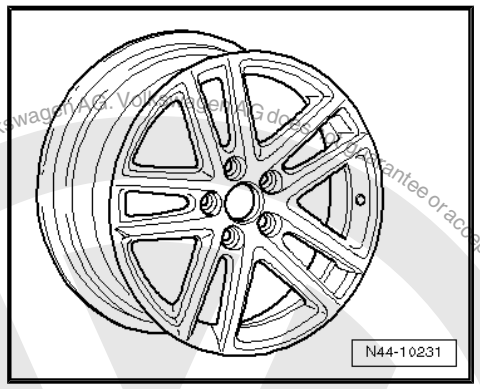

1K0 601 025 AE - Wheel and tyre combination ⇒ page 160

Size:	7 J x 17
Wheel offset in mm:	54
Wheel load in kg:	630

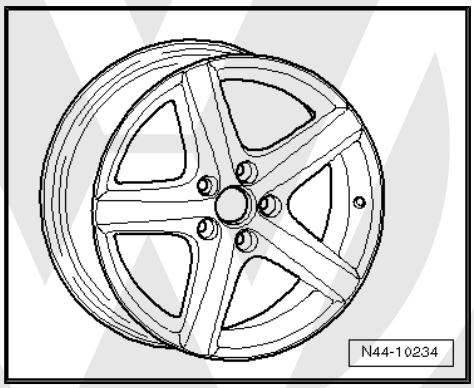

12.2.6 7 1/2 J x 17

Caution

Observe the allocation of wheels and tyres to the respective engines, which are listed in the overview table *⇒ page 159* *.*

1K0 601 025 AC - Wheel and tyre combination ⇒ page 160

Size:	7 1/2 J x 17
Wheel offset in mm:	51
Wheel load in kg:	615

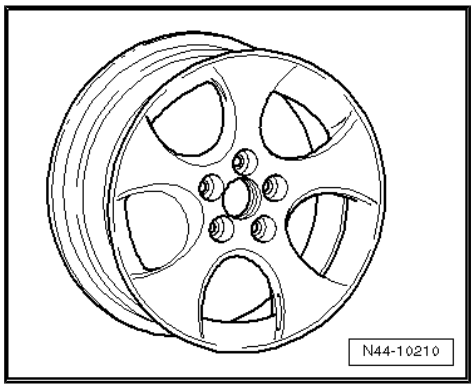

Protected by copyright. Copying for private or commercial purposes, in part or in whole, is not permitted unless authorised by Volkswagen AG. Volkswagen AG does not guarantee or accept any liability with respect to the correctness of information in this document. Copyright by Volkswagen AG.
satelettronica

12.2.7 7 1/2 J x 18

Caution

Observe the allocation of wheels and tyres to the respective engines, which are listed in the overview table ⇒ page 159 .

1K0 601 025 AG - Wheel and tyre combination ⇒ page 160

Only for vehicles with sports running gear and rear axle camber of -1°45'

Size:	7 1/2 J x 18
Wheel offset in mm:	51
Wheel load in kg:	630

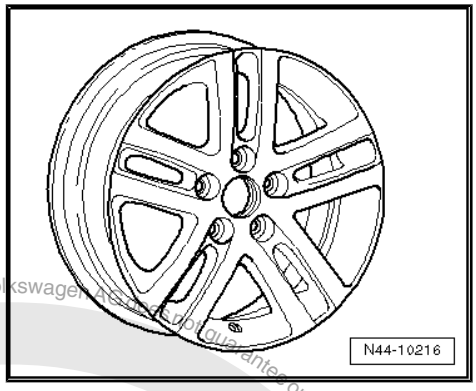

1K0 601 025 AH - Wheel and tyre combination ⇒ page 160

Only for vehicles with sports running gear and rear axle camber of -1°45'

Size:	7 1/2 J x 18
Wheel offset in mm:	51
Wheel load in kg:	615

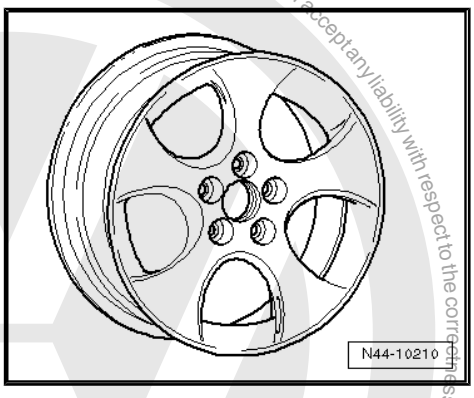

12.3 Golf GTI, type 1K model year 2005 through model year 2006

Attachment to parts certificate 1901/05

Type Approval No.: e1*2001/116*0242*07 through e1*2001/116*0242*10

Overview

Model engine output	Tyres	Tyre size	Wheel	Off-set in mm	Snow chains	Remarks
2.0l 147 kW petrol engine	Standard tyres	225/45 R 17 91W	7 1/2 J x 17 ⇒ page 172	51	No	– General notes on winter tyres
	Modification	205/55 R 16 91W	6 1/2 J x 16 ⇒ page 169	50	No	– Tyre makes recommended by Volkswagen:
		225/45 R 17 91W	7 J x 17 ⇒ page 170	54	No	◆ Summer tyres ⇒ page 374 ◆ Winter tyres ⇒ page 393
		225/40 R 18 92Y	7 1/2 J x 18 ⇒ page 172	51	No	

Protected by copyright. Copyright for private or commercial purposes, in part or in whole, is not permitted unless authorised by Volkswagen AG. Volkswagen AG does not guarantee or accept any liability with respect to the correctness of information in this document. Copyright by Volkswagen AG.
satelettronica

Model engine output	Tyres	Tyre size	Wheel	Off-set in mm	Snow chains	Remarks
	Winter tyres	205/55 R 16 91Q/T/H	6 J x 16 ⇒ page 168	50	Yes	
		205/50 R 17 93Q/T/H	6 J x 17 ⇒ page 169	48,5	Yes* ⇒ page 168	* Only fine-link snow chains, which do not add more than 8 mm may be used ⇒ page 168 .

Tyre pressures can be found on the inside of the fuel tank flap or in ⇒ Maintenance ; Booklet 38 .

Approved snow chains for 6 J x 17 ET 48.5 wheel

The snow chains listed below are permitted only in conjunction with the wheel and tyre combinations listed next to them!

Chain manufacturer Article No.	Accessories part No.	Tyre size	Wheel	Part No.
Ottinger 100 956	-	205/50 R 17 93Q/T/H	6 J x 17 ET 48.5	1K0 601 025 N

12.4 Wheel allocation for Golf GTI, type 1K model year 2005 through model year 2006

Explanation of information on wheels

Wheel bolt torque settings ⇒ Running gear, axles, steering; Rep. gr. 44 ; Wheel bolt torque settings .

Pitch circle diameter	112 mm
Number of wheel bolt holes:	5

12.4.1 6 J x 16

Caution

Observe the allocation of wheels and tyres to the respective engines, which are listed in the overview table ⇒ page 167 .

Snow tyres

8P0 601 027 - Wheel and tyre combination ⇒ page 168

Size:	6 J x 16
Wheel offset in mm:	50
Wheel load in kg:	600

Use the following wheel bolt caps for the wheel bolts:

- 1K0.601.173 (4 per wheel)
- 1K0.601.173 (1 per wheel)

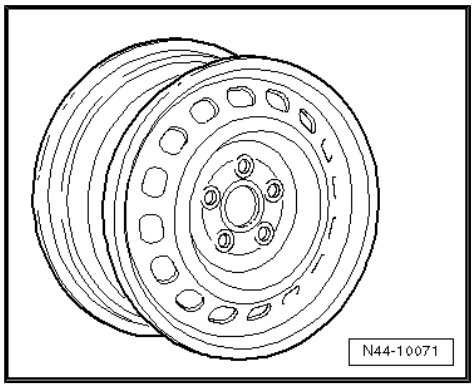

Protected by copyright. Copying for private or commercial purposes, in part or in whole, is not permitted unless authorised by Volkswagen AG. Volkswagen AG does not guarantee or accept any liability with respect to the correctness of information in this document. Copyright by Volkswagen AG.
satelettronica

1K0 601 025 Q - Wheel and tyre combination ⇒ page 168

Size:	6 J x 16 EH2
Wheel offset in mm:	50
Wheel load in kg:	615

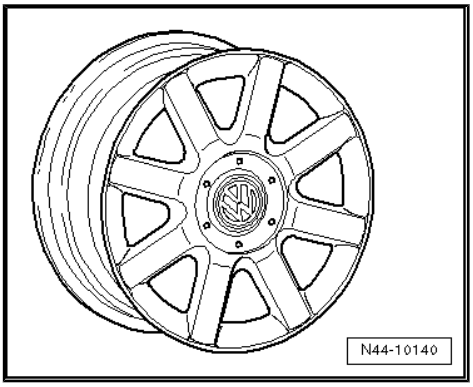

12.4.2 6 1/2 J x 16

Caution

Observe the allocation of wheels and tyres to the respective engines, which are listed in the overview table ⇒ page 167 *.*

1K0 601 025 P - Wheel and tyre combination ⇒ page 167

Size:	6 1/2 J x 16
Wheel offset in mm:	50
Wheel load in kg:	615

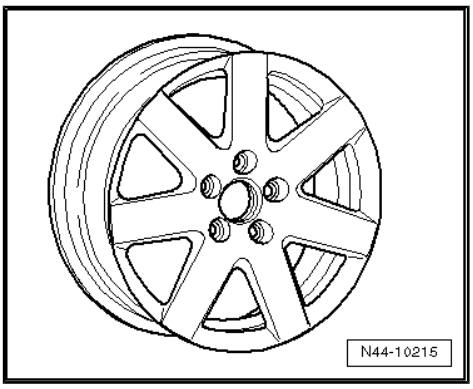

1K0 601 025 R - Wheel and tyre combination ⇒ page 167

Size:	6 1/2 J x 16
Wheel offset in mm:	50
Wheel load in kg:	615

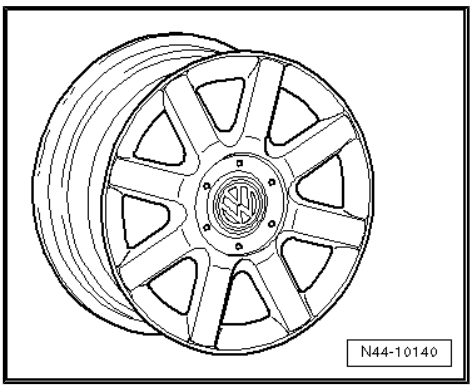

12.4.3 6 J x 17

Caution

Observe the allocation of wheels and tyres to the respective engines, which are listed in the overview table ⇒ page 167 *.*

Protected by copyright. Copyright by Volkswagen AG.
Copyright for private or commercial purposes, in part or in whole, is not permitted unless authorised by Volkswagen AG. Volkswagen AG does not guarantee or accept any liability with respect to the correctness of information in this document.
satelettronica

Winter wheel

1K0 601 025 N - Wheel and tyre combination ⇒ page 168

Size:	6 J x 17
Wheel offset in mm:	48.5
Wheel load in kg:	615

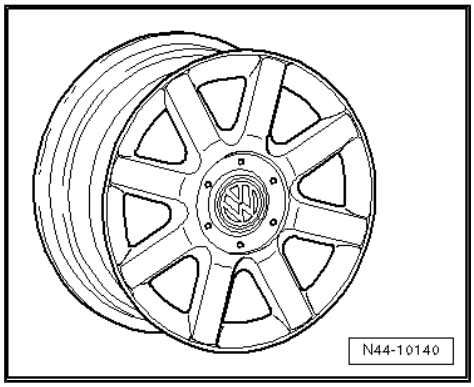

12.4.4 7 J x 17

Caution

Observe the allocation of wheels and tyres to the respective engines, which are listed in the overview table *⇒ page 167* *.*

1K0 601 025 B - Wheel and tyre combination ⇒ page 167

Size:	7 J x 17
Wheel offset in mm:	54
Wheel load in kg:	615

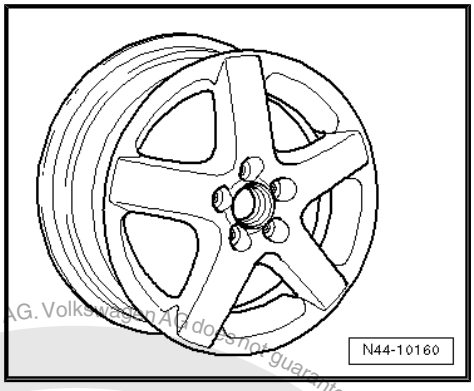

1K0 601 025 C - Wheel and tyre combination ⇒ page 167

Size:	7 J x 17
Wheel offset in mm:	54
Wheel load in kg:	615

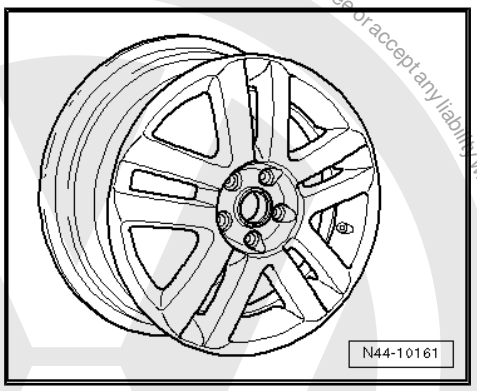

Protected by copyright. Copying for private or commercial purposes, in part or in whole, is not permitted unless authorised by Volkswagen AG. Volkswagen AG does not guarantee or accept any liability with respect to the correctness of information in this document. Copyright by Volkswagen AG.
satelettronica

1K0 601 025 J - Wheel and tyre combination ⇒ page 167

Size:	7 J x 17
Wheel offset in mm:	54
Wheel load in kg:	615

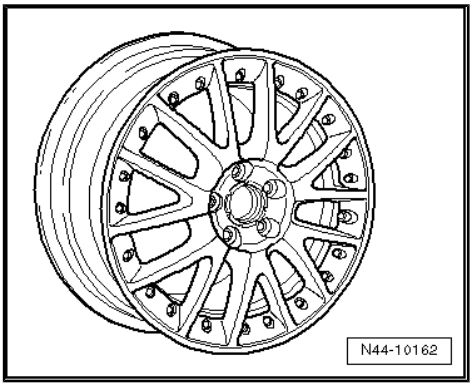

1K0 601 025 K - Wheel and tyre combination ⇒ page 167

Size:	7 J x 17
Wheel offset in mm:	54
Wheel load in kg:	615

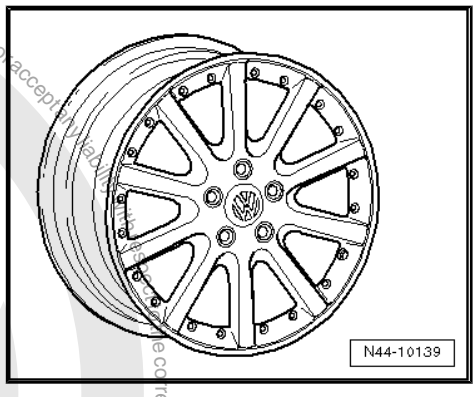

1K0 601 025 M - Wheel and tyre combination ⇒ page 167

Size:	7 J x 17
Wheel offset in mm:	54
Wheel load in kg:	615

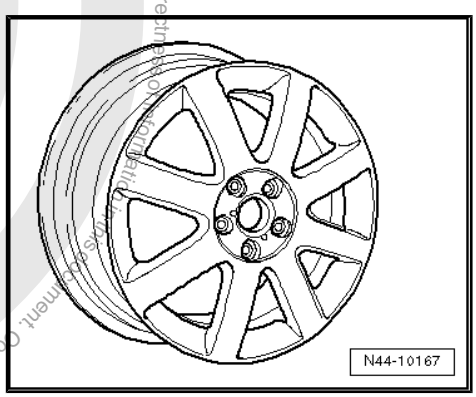

1K0 601 025 T - Wheel and tyre combination ⇒ page 167

Size:	7 J x 17
Wheel offset in mm:	54
Wheel load in kg:	615

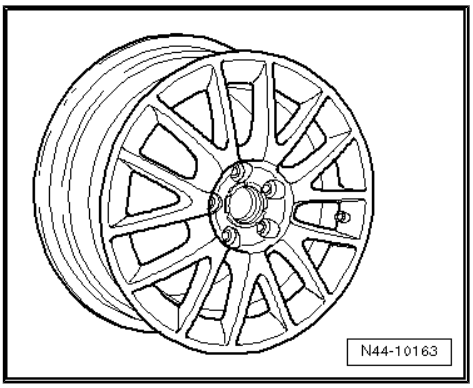

Protected by copyright. Copying for private or commercial purposes, in part or in whole, is not permitted unless authorised by Volkswagen AG. Volkswagen AG does not guarantee or accept any liability with respect to the correctness of information. Copyright by Volkswagen AG.
satelettronica

1K0 601 025 AF - Wheel and tyre combination ⇒ page 167

Size:	7 J x 17
Wheel offset in mm:	54
Wheel load in kg:	630

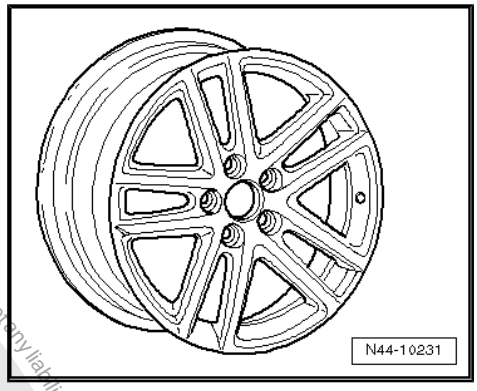

1K0 601 025 AE - Wheel and tyre combination ⇒ page 167

Size:	7 J x 17
Wheel offset in mm:	54
Wheel load in kg:	630

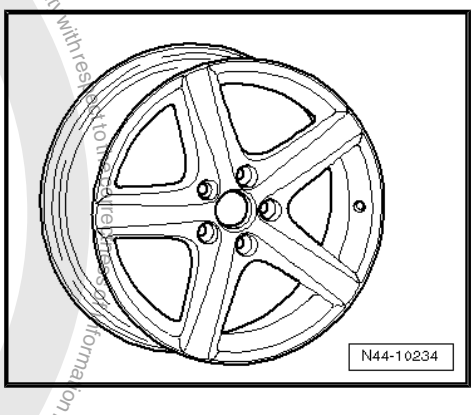

12.4.5 7 1/2 J x 17

Caution

Observe the allocation of wheels and tyres to the respective engines, which are listed in the overview table ⇒ page 167 *.*

1K0 601 025 AC - Wheel and tyre combination ⇒ page 167

Size:	7 1/2 J x 17
Wheel offset in mm:	51
Wheel load in kg:	615

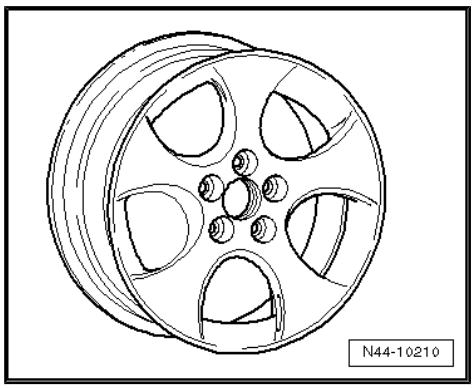

12.4.6 7 1/2 J x 18

Caution

Observe the allocation of wheels and tyres to the respective engines, which are listed in the overview table ⇒ page 167 *.*

Protected by copyright. Copying for private or commercial purposes, in part or in whole, is not permitted unless authorised by Volkswagen AG. Volkswagen AG does not guarantee or accept any liability with respect to the correctness of information in this document. Copyright by Volkswagen AG.

satelettronica

1K0 601 025 AH - Wheel and tyre combination ⇒ page 167

Size:	$7^1/_2$ J x 18
Wheel offset in mm:	51
Wheel load in kg:	615

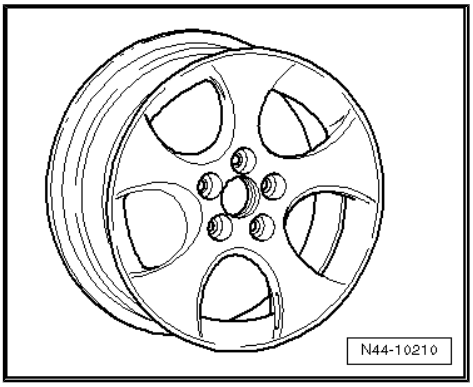

1K0 601 025 AG - Wheel and tyre combination ⇒ page 167

Size:	$7^1/_2$ J x 18
Wheel offset in mm:	51
Wheel load in kg:	630

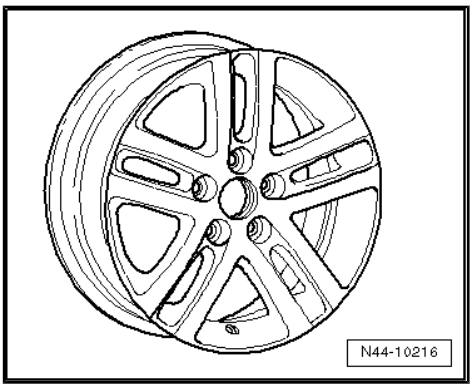

Protected by copyright. Copying for private or commercial purposes, in part or in whole, is not permitted unless authorised by Volkswagen AG. Volkswagen AG does not guarantee or accept any liability with respect to the correctness of information in this document. Copyright by Volkswagen AG.
satelettronica

13 Golf Plus from model year 2005

General

Volkswagen vehicles are built according to the latest findings in safety engineering. To keep it that way, we recommend the use of genuine Volkswagen spare parts only. You can recognise this by the VW Audi logo and by the part number. It has been established that these parts are reliable, safe and suitable.

Despite constant appraisal of the market, we cannot assess other products on these points, even when in isolated cases they have been passed by official inspectors or have been granted official approval. Therefore, we cannot, of course, assume any liability if these products are installed.

WARNING

The products from Volkswagen genuine parts and Votex genuine accessories may differ in fitting requirements, torque specifications and so on.

Always follow the respective fitting and operating instructions.

The wheel and tyre combinations or changes listed in the vehicle tables refer exclusively to Volkswagen Genuine wheels. Approval of wheel and tyre combinations or a change to wheels from the accessories trade is not possible with the parts certificate attached here.

WARNING

The fitting instructions and torque specifications for wheels from Votex genuine accessories may differ from those intended for wheels from Volkswagen genuine parts.

Therefore, always observe the torque settings for the wheel bolts as well as the respective fitting and operating instructions.

13.1 Golf Plus, type 1KP model year 2005 through model year 2006

Attachment to parts certificate 1901/05

Type Approval No.: e1*2001/116*0304*00 through e1*2001/116*0304*02

Overview

Model engine output	Tyres	Tyre size	Wheel	Off-set in mm	Snow chains	Remarks
1.4l 55 kW; 1.6l 66 kW petrol engines;	Standard tyres	195/65 R 15 91T	6 J x 15 ⇒ page 176	47	Yes	
1.9l 66 kW TDI diesel engines	Modification	195/65 R 15 91H/V	6 J x 15 ⇒ page 176	47	Yes	General notes on winter tyres
		195/65 R 15 91T/H/V	$6^1/_2$ J x 15 ⇒ page 177	50	Yes	Tyre makes recommended by Volkswagen:

satelettronica

Model engine output	Tyres	Tyre size	Wheel	Off-set in mm	Snow chains	Remarks
		205/60 R 15 91T/H/V	6 J x 15 ⇒ page 176	47	Yes	◆ Summer tyres ⇒ page 374 ◆ All-season tyres ⇒ page 383 ◆ Winter tyres ⇒ page 393
		205/55 R 16 91H/V/W	6 1/2 J x 16 ⇒ page 178	50	No	
		225/45 R 17 91H/V/W	7 J x 17 ⇒ page 179	54	No	
		225/40 R 18 92Y* ⇒ page 175	7 1/2 J x 18 ⇒ page 181	51	No	* The 225/40 R 18 92Y tyre on the 7 1/2 J x 18 ET 51 rim is permitted only on vehicles with sports running gear and rear axle camber of -1°45' !
	Winter tyres	195/65 R 15 91Q/T/H	6 J x 15 ⇒ page 176	47	Yes	
		205/55 R 16 91Q/T/H	6 J x 16 ⇒ page 178	50	Yes	
1.6l 85 kW petrol engine; 1.9l 77 kW TDI diesel engines	Standard tyres	195/65 R 15 91H	6 J x 15 ⇒ page 176	47	Yes	
	Modification	195/65 R 15 91V	6 J x 15 ⇒ page 176	47	Yes	
		195/65 R 15 91H/V	6 1/2 J x 15 ⇒ page 177	50	Yes	
		205/60 R 15 91H/V	6 J x 15 ⇒ page 176	47	Yes	
		205/55 R 16 91H/V/W	6 1/2 J x 16 ⇒ page 178	50	No	
		225/45 R 17 91H/V/W	7 J x 17 ⇒ page 179	54	No	
		225/40 R 18 92Y* ⇒ page 175	7 1/2 J x 18 ⇒ page 181	51	No	
	Winter tyres	195/65 R 15 91Q/T/H	6 J x 15 ⇒ page 176	47	Yes	
		205/55 R 16 91Q/T/H	6 J x 16 ⇒ page 178	50	Yes	

Copyright by Volkswagen AG. Volkswagen AG does not accept any liability with respect to the correctness of information in this document. Copyright by Volkswagen AG, Volkswagen AG does not accept any liability with respect to the correctness of information in this document. Copyright by Volkswagen AG. Protected by copyright. Copying for private or commercial purposes, in part or in whole, is not permitted unless authorised by Volkswagen AG.
satelettronica

Model engine output	Tyres	Tyre size	Wheel	Off-set in mm	Snow chains	Remarks
2.0l 110 kW petrol engine	Standard tyres	205/55 R 16 91V	6 1/2 J x 16 ⇒ page 178	50	No	
2.0l 100 kW TDI; 2.0l 103 kW TDI; diesel engines	Modification	195/65 R 15 91V	6 J x 15 ⇒ page 176	47	Yes	
		195/65 R 15 91V	6 1/2 J x 15 ⇒ page 177	50	Yes	
		205/60 R 15 91V	6 J x 15 ⇒ page 176	47	Yes	
		205/55 R 16 91W	6 1/2 J x 16 ⇒ page 178	50	No	
		225/45 R 17 91V/W	7 J x 17 ⇒ page 179	54	No	
		225/40 R 18 92Y* ⇒ page 175	7 1/2 J x 18 ⇒ page 181	51	No	
	Winter tyres	195/65 R 15 91Q/T/H	6 J x 15 ⇒ page 176	47	Yes	
		205/55 R 16 91Q/T/H	6 J x 16 ⇒ page 178	50	Yes	

Tyre pressures can be found on the inside of the fuel tank flap or in ⇒ Maintenance ; Booklet 38 .

13.2 Wheel allocation for Golf Plus, type 1KP model year 2005 through model year 2006

Explanation of information on wheels

Wheel bolt torque settings ⇒ Running gear, axles, steering; Rep. gr. 44 ; Wheel bolt torque settings .

Pitch circle diameter	112 mm
Number of wheel bolt holes:	5

13.2.1 6 J x 15

Caution

Observe the allocation of wheels and tyres to the respective engines, which are listed in the overview table ⇒ page 174 .

Protected by copyright. Copyright by Volkswagen AG.
Volkswagen AG does not guarantee or accept any liability with respect to the correctness of information in this document.
Copyright by Volkswagen AG.
Whole, is not permitted unless authorised by Volkswagen AG for private or commercial purposes, in part or in
satelettronica

1K0 601 027 C - Wheel and tyre combination ⇒ page 174

Size:	6 J x 15
Wheel offset in mm:	47
Wheel load in kg:	600

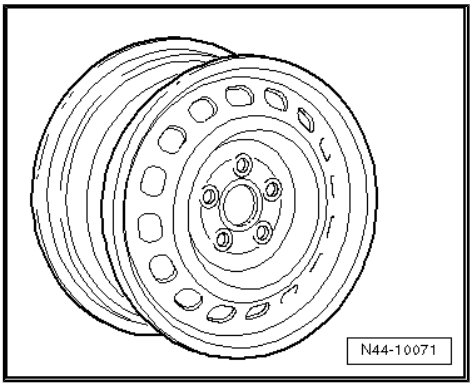

2K0 601 027 - Wheel and tyre combination ⇒ page 174

Size:	6 J x 15
Wheel offset in mm:	47
Wheel load in kg:	625

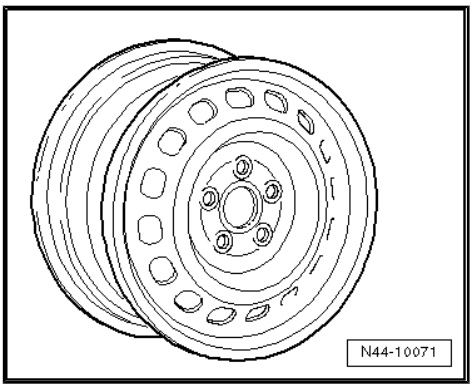

13.2.2 6 1/2 J x 15

Caution

Observe the allocation of wheels and tyres to the respective engines, which are listed in the overview table ⇒ page 174 *.*

1K0 601 025 A - Wheel and tyre combination ⇒ page 174

Size:	6 1/2 J x 15
Wheel offset in mm:	50
Wheel load in kg:	600

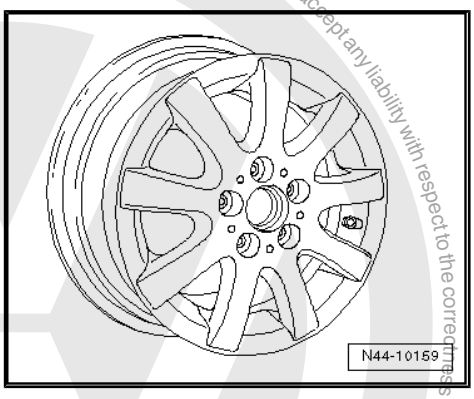

1K0 601 025 F - Wheel and tyre combination ⇒ page 174

Size:	6 1/2 J x 15
Wheel offset in mm:	50
Wheel load in kg:	615

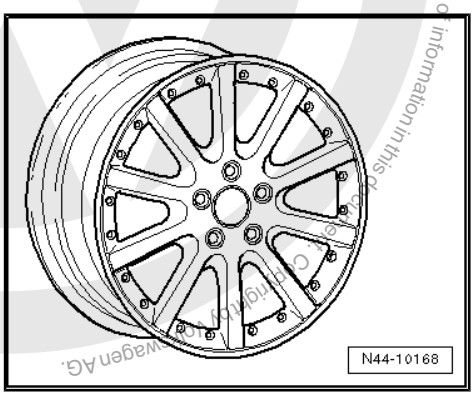

Protected by copyright. Copying for private or commercial purposes, in part or in whole, is not permitted unless authorised by Volkswagen AG. Volkswagen AG does not guarantee or accept any liability with respect to the correctness of information in this document. Copyright by Volkswagen AG.
satelettronica

Protected by copyright. Copying for private or commercial purposes, in part or in whole, is not permitted unless authorised by Volkswagen AG. Volkswagen AG does not guarantee or accept any liability with respect to the correctness of information in this document. Copyright by Volkswagen AG.

13.2.3 6 J x 16

Caution

Observe the allocation of wheels and tyres to the respective engines, which are listed in the overview table ⇒ page 174 *.*

Snow tyres

8P0 601 027 - Wheel and tyre combination ⇒ page 175

Size:	6 J x 16
Wheel offset in mm:	50
Wheel load in kg:	600

Use the following wheel bolt caps for the wheel bolts:

- 1K0.601.173 (4 per wheel)
- 1K0.601.173 (1 per wheel)

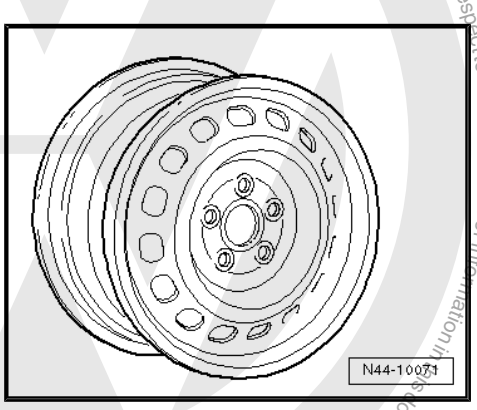

1K0 601 025 Q - Wheel and tyre combination ⇒ page 175

Size:	6 J x 16 EH2
Wheel offset in mm:	50
Wheel load in kg:	615

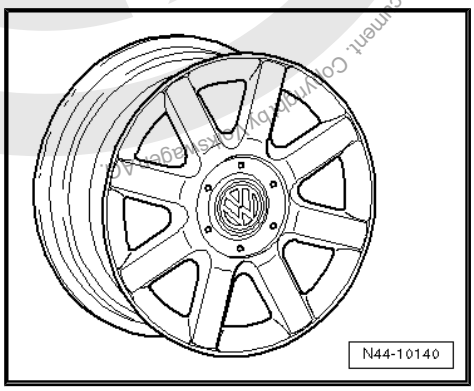

13.2.4 6$^1/_2$ J x 16

Caution

Observe the allocation of wheels and tyres to the respective engines, which are listed in the overview table ⇒ page 174 *.*

1K0 601 027 A - Wheel and tyre combination ⇒ page 175

Size:	6$^1/_2$ J x 16
Wheel offset in mm:	50
Wheel load in kg:	615

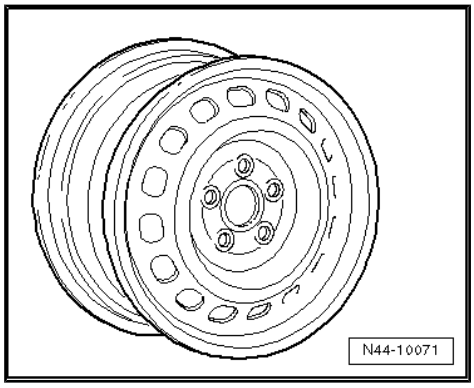

satelettronica

1T0 601 025 C - Wheel and tyre combination ⇒ page 175

Size:	$6^1/_2$ J x 16
Wheel offset in mm:	50
Wheel load in kg:	615

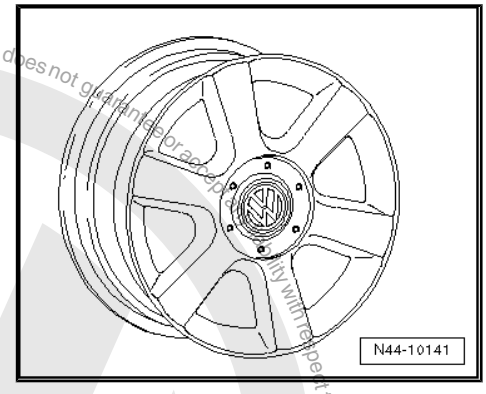

1K0 601 025 P - Wheel and tyre combination ⇒ page 175

Size:	$6^1/_2$ J x 16
Wheel offset in mm:	50
Wheel load in kg:	615

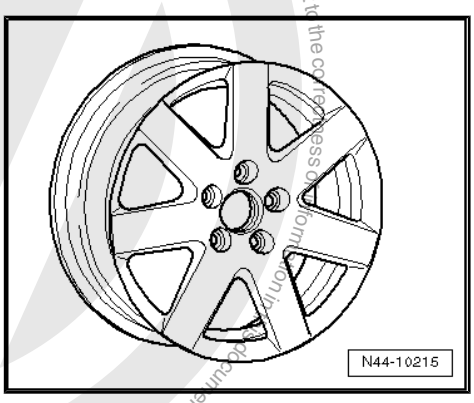

1K0 601 025 R - Wheel and tyre combination ⇒ page 175

Size:	$6^1/_2$ J x 16
Wheel offset in mm:	50
Wheel load in kg:	615

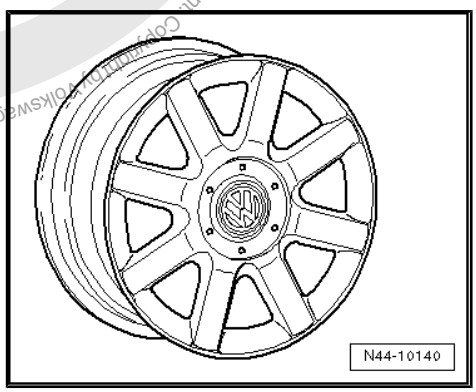

13.2.5 7 J x 17

Caution

Observe the allocation of wheels and tyres to the respective engines, which are listed in the overview table ⇒ page 174 *.*

1K0 601 025 B - Wheel and tyre combination ⇒ page 175

Size:	7 J x 17
Wheel offset in mm:	54
Wheel load in kg:	615

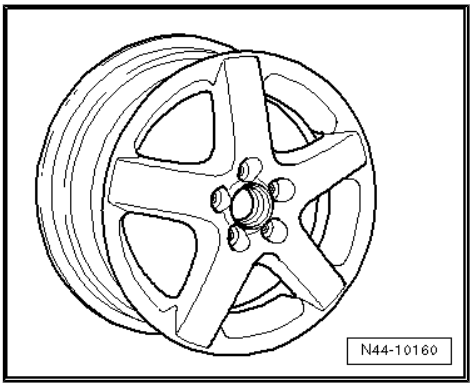

Protected by copyright. Copyright by Volkswagen AG. Volkswagen AG does not guarantee or accept any liability with respect to the correctness of information in this document. Copying for private or commercial purposes, in part or in whole, is not permitted unless authorised by Volkswagen AG.
satelettronica

1K0 601 025 C - Wheel and tyre combination ⇒ page 175

Size:	7 J x 17
Wheel offset in mm:	54
Wheel load in kg:	615

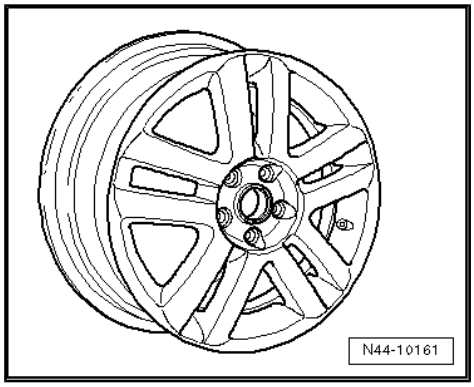

1K0 601 025 J - Wheel and tyre combination ⇒ page 175

Size:	7 J x 17
Wheel offset in mm:	54
Wheel load in kg:	615

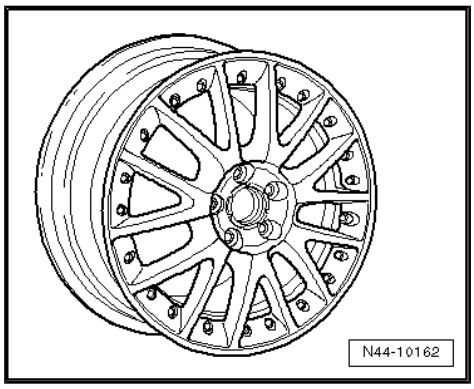

1K0 601 025 K - Wheel and tyre combination ⇒ page 175

Size:	7 J x 17
Wheel offset in mm:	54
Wheel load in kg:	615

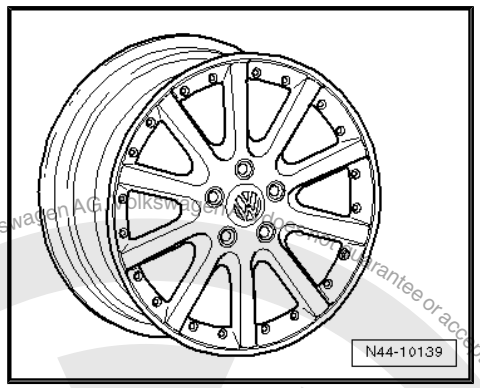

1K0 601 025 M - Wheel and tyre combination ⇒ page 175

Size:	7 J x 17
Wheel offset in mm:	54
Wheel load in kg:	615

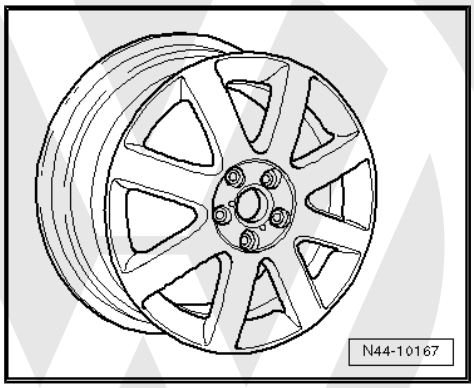

Protected by copyright. Copying for private or commercial purposes, in part or in whole, is not permitted unless authorised by Volkswagen AG. Volkswagen AG does not guarantee or accept any liability with respect to the correctness of information in this document. Copyright by Volkswagen AG.
satelettronica

1K0 601 025 T - Wheel and tyre combination ⇒ page 175

Size:	7 J x 17
Wheel offset in mm:	54
Wheel load in kg:	615

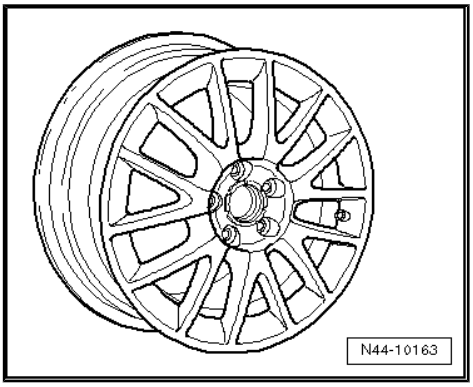

1K0 601 025 AF - Wheel and tyre combination ⇒ page 175

Size:	7 J x 17
Wheel offset in mm:	54
Wheel load in kg:	630

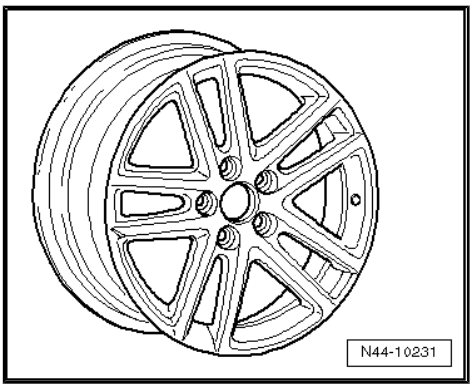

1K0 601 025 AE - Wheel and tyre combination ⇒ page 175

Size:	7 J x 17
Wheel offset in mm:	54
Wheel load in kg:	630

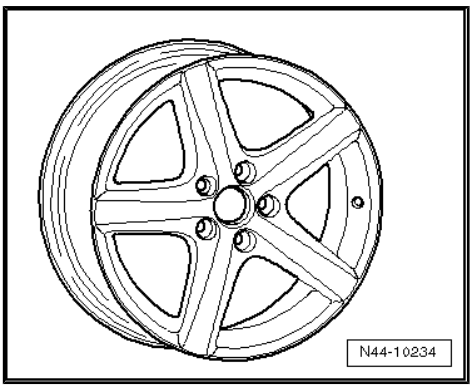

13.2.6 7 1/2 J x 18

Caution

Observe the allocation of wheels and tyres to the respective engines, which are listed in the overview table ⇒ page 174 *.*

1K0 601 025 AH - Wheel and tyre combination ⇒ page 175

Only for vehicles with sports running gear and rear axle camber of -1°45'

Size:	7 1/2 J x 18
Wheel offset in mm:	51
Wheel load in kg:	615

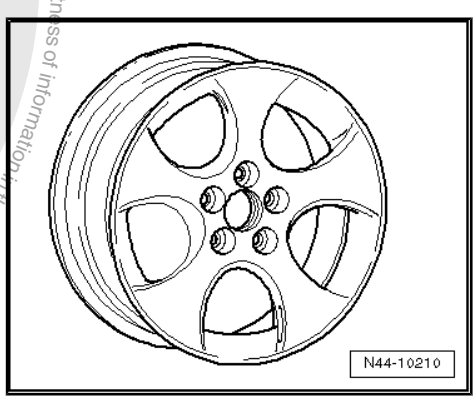

Protected by copyright. Copying for private or commercial purposes, in part or in whole, is not permitted unless authorised by Volkswagen AG. Volkswagen AG does not guarantee or accept any liability with respect to the correctness of information in this document. Copyright by Volkswagen AG.
satelettronica

Protected by copyright. Copying for private or commercial purposes, in part or in whole, is not permitted unless authorised by Volkswagen AG. Volkswagen AG does not guarantee or accept any liability with respect to the correctness of information in this document. Copyright by Volkswagen AG.

1K0 601 025 AG - Wheel and tyre combination ⇒ page 175

Only for vehicles with sports running gear and rear axle camber of -1°45'

Size:	$7^1/_2$ J x 18
Wheel offset in mm:	51
Wheel load in kg:	630

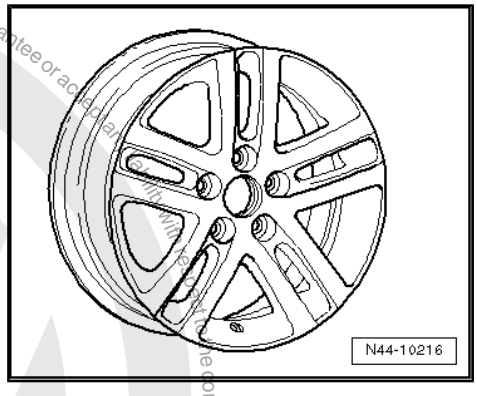

satelettronica

14 Golf Estate model year 1994 through model year 1998

General

Volkswagen vehicles are built according to the latest findings in safety engineering. To keep it that way, we recommend the use of genuine Volkswagen spare parts only. You can recognise this by the VW Audi logo and by the part number. It has been established that these parts are reliable, safe and suitable.

Despite constant appraisal of the market, we cannot assess other products on these points, even when in isolated cases they have been passed by official inspectors or have been granted official approval. Therefore, we cannot, of course, assume any liability if these products are installed.

> ⚠ WARNING
>
> *The products from Volkswagen genuine parts and Votex genuine accessories may differ in fitting requirements, torque specifications and so on.*
>
> *Always follow the respective fitting and operating instructions.*

The wheel and tyre combinations or changes listed in the vehicle tables refer exclusively to Volkswagen Genuine wheels. Approval of wheel and tyre combinations or a change to wheels from the accessories trade is not possible with the parts certificate attached here.

> ⚠ WARNING
>
> *The fitting instructions and torque specifications for wheels from Votex genuine accessories may differ from those intended for wheels from Volkswagen genuine parts.*
>
> *Therefore, always observe the torque settings for the wheel bolts as well as the respective fitting and operating instructions.*

14.1 Golf Estate type 1HX0, Golf Estate Syncro type 1HX1, Golf Estate type 1H

Appendix 2 to Parts Certificate 1479/00

Protected by copyright. Copying for private or commercial purposes, in part or in whole, is not permitted unless authorised by Volkswagen AG. Volkswagen AG does not guarantee or accept any liability with respect to the correctness of information in this document. Copyright by Volkswagen AG.
satelettronica

Golf Estate; type 1HX0 from model year 1994 through model year 1997

General type approval No.: F 804

Golf Estate Syncro; type 1HX1 from model year 1994 through model year 1997

General type approval No.: G 156

Golf Estate; type 1H model year 1998

Type Approval No. e1*96/79*0068*00 bis e1*96/79*0068*03

Overview

Model engine output	Tyres	Tyre size	Wheel	Off-set in mm	Snow chains	Remarks
40 kW, 44 kW	Standard tyres	175/70 R 13 82T	$5^1/_2$ J x 13 ⇒ page 186	38	Yes	The 175/70 R 13 82S/T/Q tyres are no longer permitted on vehicles with ABS from 05.96.
	Modification	175/70 R 13 82S	$5^1/_2$ J x 13 ⇒ page 186	38	Yes	
		185/60 R 14 82T	6 J x 14 ⇒ page 187	43/45	Yes	
		195/60 R 14 85T* ⇒ page 184	6 J x 14 ⇒ page 187	43/45	Yes	*Vehicles from model year 1995 require tyres with LI 86
		195/50 R 15 82H	6 J x 15 ⇒ page 190	45	Yes	
	Winter tyres	175/70 R 13 82Q	$5^1/_2$ J x 13 ⇒ page 186	38	Yes	General notes on winter tyres
47 kW, 55 kW CL, GL diesel engine; 55 kW CL, GL petrol engine	Standard tyres	185/60 R 14 82H	6 J x 14 ⇒ page 187	43/45	Yes	Tyre makes recommended by Volkswagen: ◆ Summer tyres ⇒ page 366 ◆ All-season tyres ⇒ page 381 ◆ Winter tyres ⇒ page 389
	Modification	185/60 R 14 82T	6 J x 14 ⇒ page 187	43/45	Yes	
		195/60 R 14 85T* ⇒ page 184	6 J x 14 ⇒ page 187	43/45	Yes	
		195/50 R 15 82H	6 J x 15 ⇒ page 190	45	Yes	
	Winter tyres	175/65 R 14 82Q	6 J x 14 ⇒ page 187	43/45	Yes	
66 kW TDI; 66 kW CL, GT	Standard tyres	195/50 R 15 86H	6 J x 15 ⇒ page 190	43/45	Yes	

Protected by copyright. Copying for private or commercial purposes, in part or in whole, is not permitted unless authorised by Volkswagen AG. Volkswagen AG does not guarantee or accept any liability with respect to the correctness of information in this document. Copyright by Volkswagen AG.

satelettronica

Model engine output	Tyres	Tyre size	Wheel	Off-set in mm	Snow chains	Remarks
	Modification	185/60 R 14 82T	6 J x 14 ⇒ page 187	43/45	Yes	
		195/60 R 14 85T* ⇒ page 184	6 J x 14 ⇒ page 187	43/45	Yes	
		195/50 R 15 82H	6 J x 15 ⇒ page 190	45	Yes	
	Winter tyres	175/65 R 14 82Q	6 J x 14 ⇒ page 187	43/45	Yes	
Estate „Special“ 66 kW GT; 55 kW GTD 66 kW TDI	Standard tyres	195/50 R 15 86V	6 J x 15 ⇒ page 190	45	Yes	
	Modification	185/60 R 14 82T	6 J x 14 ⇒ page 187	43/45	Yes	
		195/60 R 14 85T* ⇒ page 184	6 J x 14 ⇒ page 187	43/45	Yes	
		195/50 R 15 82H	6 J x 15 ⇒ page 190	45	Yes	
	Winter tyres	175/65 R 14 82Q	6 J x 14 ⇒ page 187	43/45	Yes	
74 kW; 81 kW TDI 85 kW CL, GL	Standard tyres	195/60 R 14 86H	6 J x 14 ⇒ page 187	43/45	Yes	
	Modification	195/60 R 14 85H* ⇒ page 184	6 J x 14 ⇒ page 187	43/45	Yes	
		195/50 R 15 82H	6 J x 15 ⇒ page 190	45	Yes	
	Winter tyres	175/65 R 14 82Q	6 J x 14 ⇒ page 187	43/45	Yes	
Estate „Special“ 85 kW GT	Standard tyres	195/60 R 15 82V	6 J x 15 ⇒ page 190	45	Yes	
	Modification	195/60 R 14 85H	6 J x 14 ⇒ page 187	43/45	Yes	
		195/50 R 15 82H	6 J x 15 ⇒ page 190	45	Yes	
	Winter tyres	175/65 R 14 82Q	6 J x 14 ⇒ page 187	43/45	Yes	
Estate Syncro 66 kW TDI 66 kW petrol engine	Standard tyres	195/60 R 14 86T* ⇒ page 184	6 J x 14 ⇒ page 190	43/45	Yes	Syncro vehicles: Snow chains are permitted on the front wheels only.

Protected by copyright. Copying for private or commercial purposes, in part or in whole, is not permitted unless authorised by Volkswagen AG. Volkswagen AG does not guarantee or accept any liability with respect to the correctness of information in this document. Copyright by Volkswagen AG.

satelettronica

Model engine output	Tyres	Tyre size	Wheel	Off-set in mm	Snow chains	Remarks
		195/60 R 14 85T	6 J x 14 ⇒ page 190	43/45	Yes	
	Modification	No changes are permissible apart from the standard wheel and tyre combinations!				
	Winter tyres	195/60 R 14 85Q* ⇒ page 184	6 J x 14 ⇒ page 190	43/45	Yes	
Estate Syncro 85 kW	Standard tyres	195/60 R 14 86H	6 J x 14 ⇒ page 190	43/45	Yes	
	Modification	No changes are permissible apart from the standard wheel and tyre combinations!				
	Winter tyres	195/60 R 14 86Q	6 J x 14 ⇒ page 190	43/45	Yes	
Estate Syncro 140 kW VR6	Standard tyres	205/50 R 15 86W	$6^1/_2$ J x 15 ⇒ page 193	43	Yes	**Tyres with this double rating were offered by tyre dealers only during a transition period after which W tyres were offered.
	Modification	205/50 ZR 15 86W** ⇒ page 186	$6^1/_2$ J x 15 ⇒ page 193	43	Yes	
	Winter tyres	185/55 R 15 81T reinforced	6 J x 15 ⇒ page 192	35	Yes	

Tyre pressures can be found on the inside of the fuel tank flap or in ⇒ Maintenance ; Booklet 35 .

14.2 Wheel allocation for Golf Estate type 1HX0, Golf Estate Syncro type 1HX1, Golf Estate type 1H

Explanation of information on wheels

Torque specifications for wheel bolts ⇒ Running gear; Rep. gr. 40 ; Repairing front suspension (basic running gear); Removing and installing wheel bearing, strut, drive shaft (basic suspension) or ⇒ Running gear; Rep. gr. 40 ; Repairing front suspension (plus running gear); Removing and installing wheel bearing, strut (plus running gear)

Pitch circle diameter: 100 mm

14.2.1 $5^1/_2$ J x 13

Caution

Observe the allocation of wheels and tyres to the respective engines, which are listed in the overview table ⇒ page 184 .

satelettronica
Protected by copyright. Copying for private or commercial purposes, in part or in whole, is not permitted unless authorised by Volkswagen AG. Volkswagen AG does not guarantee or accept any liability with respect to the correctness of information in this document. Copyright by Volkswagen AG.

Estate 1.4l with manual gearbox

1H0 601 025 A - Wheel and tyre combination ⇒ page 184

Size:	$5^1/_2$ J x 13
Wheel offset in mm:	38
Wheel load in kg:	450
Number of wheel bolt holes:	4

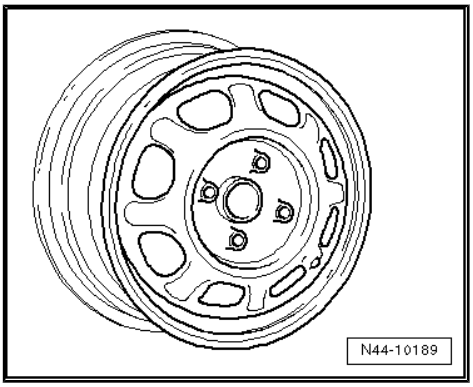

321 601 025 J/M - Wheel and tyre combination ⇒ page 184

Size:	$5^1/_2$ J x 13
Wheel offset in mm:	38
Wheel load in kg:	460
Number of wheel bolt holes:	4

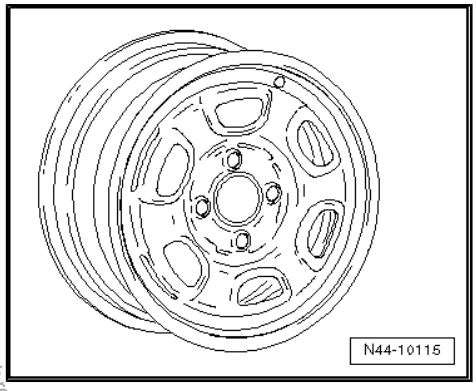

14.2.2 6 J x 14

Caution

Observe the allocation of wheels and tyres to the respective engines, which are listed in the overview table ⇒ page 184 *.*

Estate to 85 kW petrol engine, Estate to 55 kW diesel engine with manual gearbox

811 601 025 P - Wheel and tyre combination ⇒ page 184

Note

This rim is allowed only for vehicles with a maximum permitted axle load of 880 kg.

Size:	6 J x 14
Wheel offset in mm:	45
Wheel load in kg:	440
Number of wheel bolt holes:	4

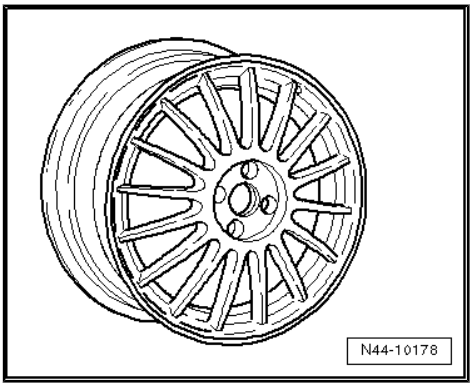

Protected by copyright. Copyright by Volkswagen AG. Volkswagen AG does not guarantee or accept any liability with respect to the correctness of information in this document. Copying for private or commercial purposes, in part or in whole, is not permitted unless authorised by Volkswagen AG.
satelettronica

1H0 601 025 D - Wheel and tyre combination ⇒ page 184

Size:	6 J x 14
Wheel offset in mm:	45
Wheel load in kg:	450
Number of wheel bolt holes:	4

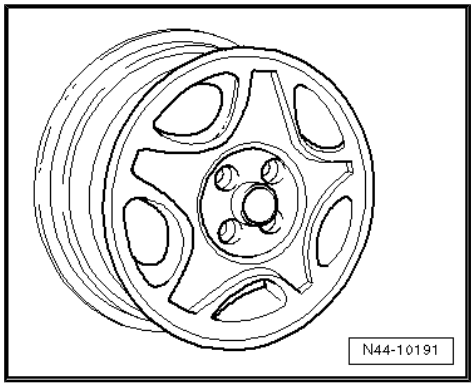

1H0 601 025 AE - Wheel and tyre combination ⇒ page 184

Size:	6 J x 14
Wheel offset in mm:	45
Wheel load in kg:	480
Number of wheel bolt holes:	4

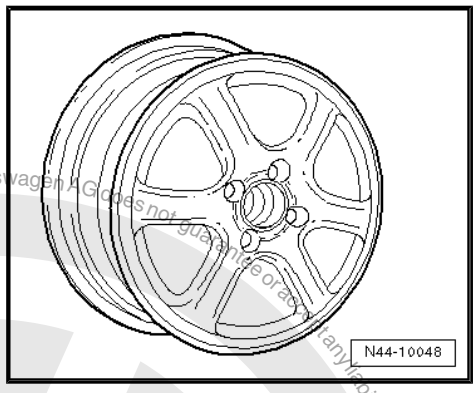

1H0 601 027 - Wheel and tyre combination ⇒ page 184

Size:	6 J x 14
Wheel offset in mm:	45
Wheel load in kg:	500
Number of wheel bolt holes:	4

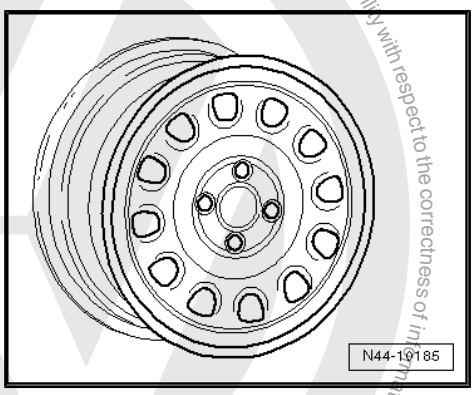

1H0 601 027 A - Wheel and tyre combination ⇒ page 184

Size:	6 J x 14
Wheel offset in mm:	43
Wheel load in kg:	500
Number of wheel bolt holes:	4

Estate to 85 kW petrol and diesel engines

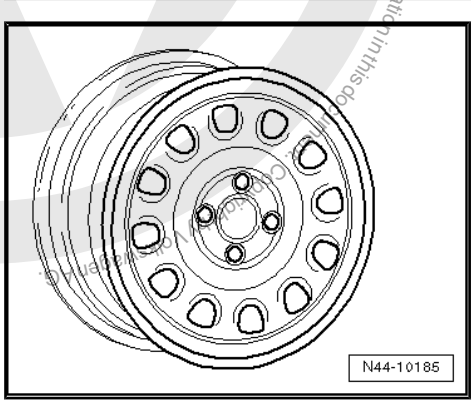

Protected by copyright. Copying for private or commercial purposes, in part or in whole, is not permitted unless authorised by Volkswagen AG. Volkswagen AG does not guarantee or accept any liability with respect to the correctness of information in this document. Copyright by Volkswagen AG.
satelettronica

1H0 601 025 P - Wheel and tyre combination ⇒ page 184

Size:	6 J x 14
Wheel offset in mm:	45
Wheel load in kg:	460
Number of wheel bolt holes:	4

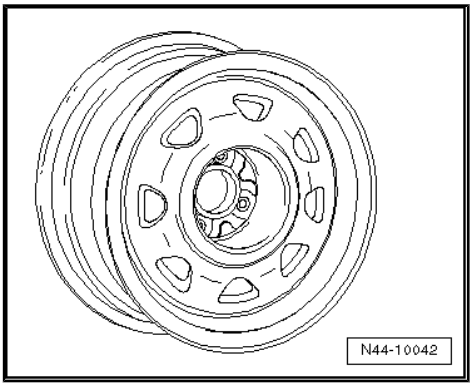

1HM 601 025 - Wheel and tyre combination ⇒ page 184

Size:	6 J x 14
Wheel offset in mm:	45
Wheel load in kg:	460
Number of wheel bolt holes:	4

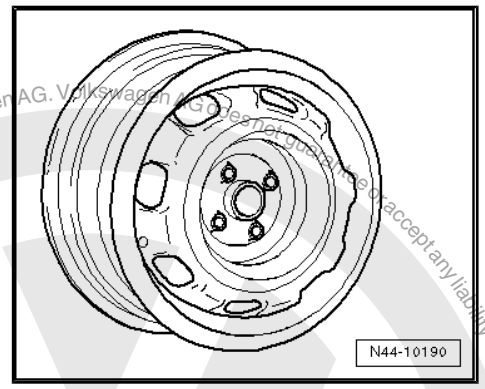

1H0 601 025 B - Wheel and tyre combination ⇒ page 184

Size:	6 J x 14
Wheel offset in mm:	45
Wheel load in kg:	460
Number of wheel bolt holes:	4

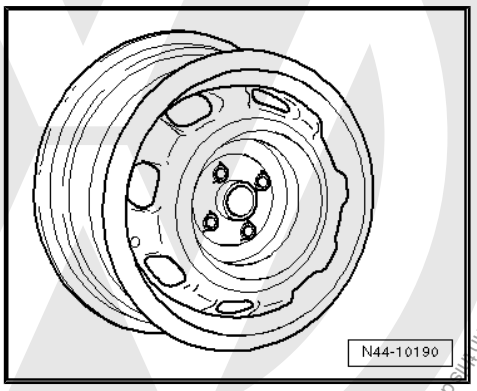

1H0 601 027 A - Wheel and tyre combination ⇒ page 184

Size:	6 J x 14
Wheel offset in mm:	43
Wheel load in kg:	500
Number of wheel bolt holes:	4

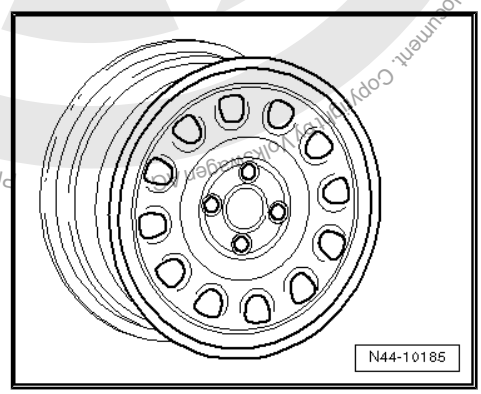

Protected by copyright. Copying for private or commercial purposes, in part or in whole, is not permitted unless authorised by Volkswagen AG. Volkswagen AG does not guarantee or accept any liability with respect to the correctness of information in this document. Copyright by Volkswagen AG.
satelettronica

1H0 601 025 R - Wheel and tyre combination ⇒ page 184

Size:	6 J x 14
Wheel offset in mm:	45
Wheel load in kg:	500
Number of wheel bolt holes:	4

Estate Syncro to 85 kW petrol and diesel engines

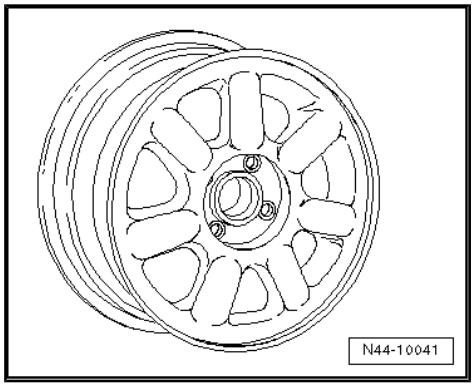

1H1 601 027 - Wheel and tyre combination ⇒ page 185

Size:	6 J x 14
Wheel offset in mm:	45
Wheel load in kg:	480
Number of wheel bolt holes:	4

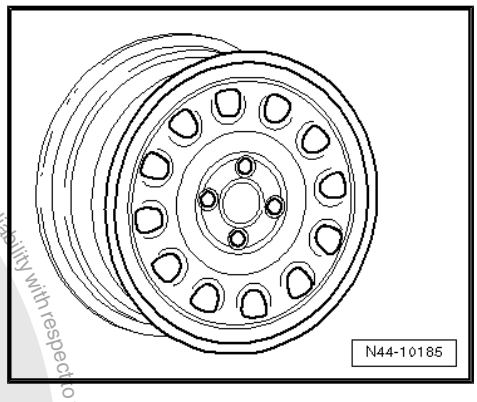

1H1 601 027 A - Wheel and tyre combination ⇒ page 185

Size:	6 J x 14
Wheel offset in mm:	45
Wheel load in kg:	500
Number of wheel bolt holes:	4

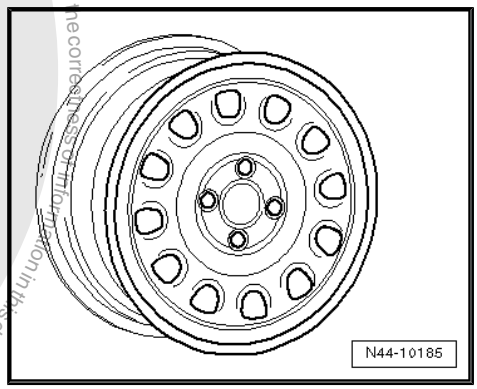

1H0 601 025 R - Wheel and tyre combination ⇒ page 185

Size:	6 J x 14
Wheel offset in mm:	45
Wheel load in kg:	500
Number of wheel bolt holes:	4

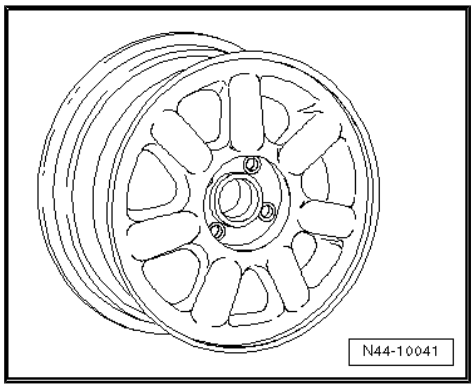

14.2.3 6 J x 15

Caution

Observe the allocation of wheels and tyres to the respective engines, which are listed in the overview table ⇒ page 184 *.*

Protected by copyright. Copyright by Volkswagen AG. Volkswagen AG does not guarantee or accept any liability with respect to the correctness of information in this document. Copying for private or commercial purposes, in part or in whole, is not permitted unless authorised by Volkswagen AG.

satelettronica

Golf Estate to 85 kW petrol engine, Golf Estate to 55 kW diesel engine with manual gearbox

1H0 601 025 E - Wheel and tyre combination ⇒ page 184

Size:	6 J x 15
Wheel offset in mm:	45
Wheel load in kg:	450
Number of wheel bolt holes:	4

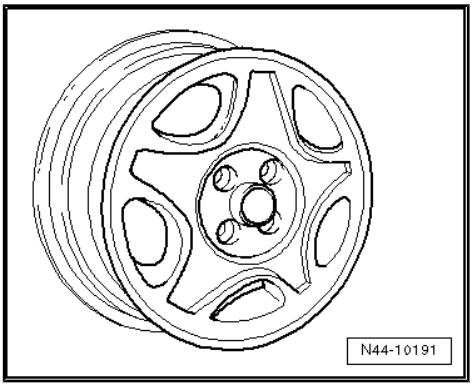

1H0 601 025 L - Wheel and tyre combination ⇒ page 184

Size:	6 J x 15
Wheel offset in mm:	45
Wheel load in kg:	450
Number of wheel bolt holes:	4

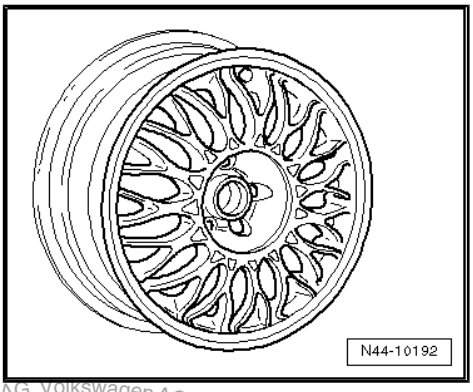

1H0 601 025 Q - Wheel and tyre combination ⇒ page 184

Size:	6 J x 15
Wheel offset in mm:	45
Wheel load in kg:	450
Number of wheel bolt holes:	4

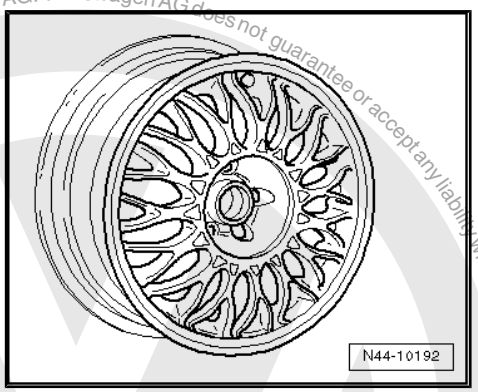

1H0 601 025 AD - Wheel and tyre combination ⇒ page 184

Size:	6 J x 15
Wheel offset in mm:	45
Wheel load in kg:	460
Number of wheel bolt holes:	4

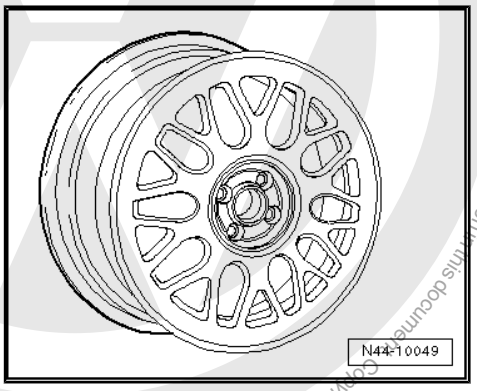

Estate to 85 kW petrol and diesel engines

Protected by copyright. Copying for private or commercial purposes, part or in whole, is not permitted unless authorised by Volkswagen AG. Volkswagen AG does not guarantee or accept any liability with respect to the correctness of information in this document. Copyright by Volkswagen AG.
satelettronica

1H0 601 025 AD - Wheel and tyre combination ⇒ page 184

Size:	6 J x 15
Wheel offset in mm:	45
Wheel load in kg:	460
Number of wheel bolt holes:	4

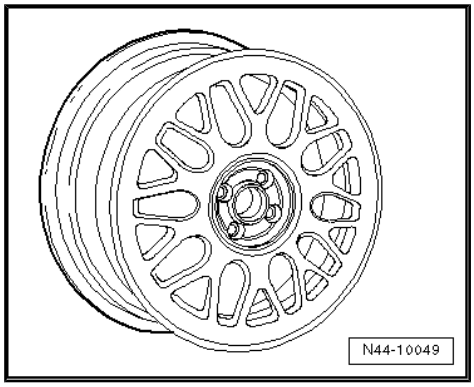

1H0 601 025 AE - Wheel and tyre combination ⇒ page 184

Size:	6 J x 15
Wheel offset in mm:	45
Wheel load in kg:	480
Number of wheel bolt holes:	4

VR6 Syncro - possible only for winter tyres

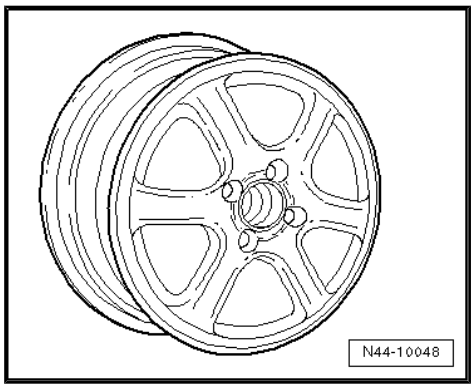

3A0 601 027 - Wheel and tyre combination ⇒ page 186

Size:	6 J x 15
Wheel offset in mm:	35
Wheel load in kg:	530
Number of wheel bolt holes:	5

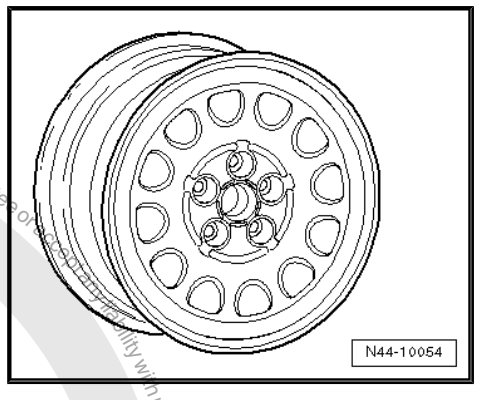

1H0 601 025 J - Wheel and tyre combination ⇒ page 186

Size:	6 J x 15
Wheel offset in mm:	38
Wheel load in kg:	530
Number of wheel bolt holes:	5

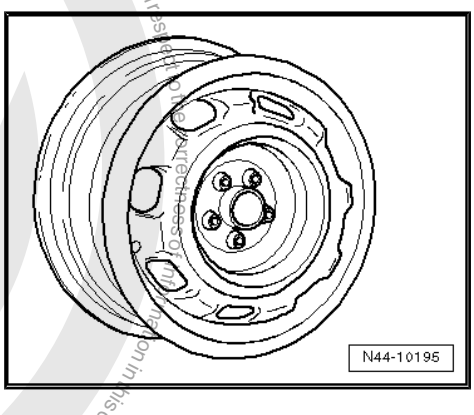

Protected by copyright. Copying for private or commercial purposes, partly or in whole, is not permitted unless authorised by Volkswagen AG. Volkswagen AG does not guarantee or accept any liability with respect to the correctness of information in this document. Copyright by Volkswagen AG.
satelettronica

14.2.4 6 1/2 J x 15

VR6 Syncro

1H0 601 025 AA - Wheel and tyre combination ⇒ page 186

Size:	6 1/2 J x 15
Wheel offset in mm:	43
Wheel load in kg:	500
Number of wheel bolt holes:	5

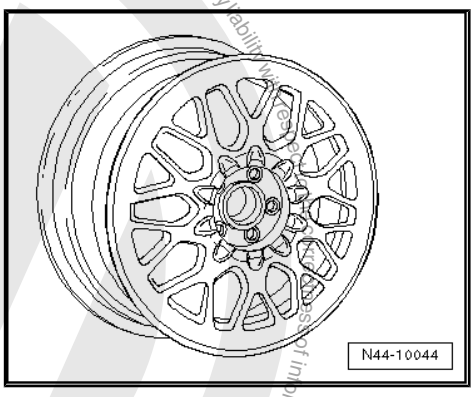

Protected by copyright. Copying for private or commercial purposes, in part or in whole, is not permitted unless authorised by Volkswagen AG. Volkswagen AG does not guarantee or accept any liability with respect to the correctness of information in this document. Copyright by Volkswagen AG.
satelettronica

15 Golf Estate from model year 1999 through model year 2006, Bora Estate from model year 1999 through model year 2005

General

Volkswagen vehicles are built according to the latest findings in safety engineering. To keep it that way, we recommend the use of genuine Volkswagen spare parts only. You can recognise this by the VW Audi logo and by the part number. It has been established that these parts are reliable, safe and suitable.

Despite constant appraisal of the market, we cannot assess other products on these points, even when in isolated cases they have been passed by official inspectors or have been granted official approval. Therefore, we cannot, of course, assume any liability if these products are installed.

WARNING

The products from Volkswagen genuine parts and Votex genuine accessories may differ in fitting requirements, torque specifications and so on.

Always follow the respective fitting and operating instructions.

The wheel and tyre combinations or changes listed in the vehicle tables refer exclusively to Volkswagen Genuine wheels. Approval of wheel and tyre combinations or a change to wheels from the accessories trade is not possible with the parts certificate attached here.

WARNING

The fitting instructions and torque specifications for wheels from Votex genuine accessories may differ from those intended for wheels from Volkswagen genuine parts.

Therefore, always observe the torque settings for the wheel bolts as well as the respective fitting and operating instructions.

15.1 Golf Estate, Golf Estate 4Motion, Bora Estate, Bora Estate 4Motion, type 1J

Golf Estate, Golf Estate 4Motion; type 1J from model year 1999 through model year 2006

Bora Estate, Bora Estate 4Motion; Type 1J from model year 1999 through model year 2005

Appendix 2 to Parts Certificate 1958/04

Protected by copyright. Copying for private or commercial purposes, in part or in full, is not permitted without the consent of Volkswagen AG. Volkswagen AG does not guarantee or accept any liability with respect to the correctness of information in this document. Copyright by Volkswagen AG.
satelettronica

Type Approval No.: e1*96/79*0071*08 bis e1*96/79*0071*09

Type Approval No.: e1*98/14*0071*10 to e1*98/14*0071*30

Type Approval No.: e1*2001/116*0071*31 through e1*2001/116*0071*36

Overview

Model engine output	Tyres	Tyre size	Wheel	Off-set in mm	Snow chains	Remarks
1.4l 55 kW petrol engine; 1.9l 50 kW diesel engine	Standard tyres	195/65 R 15 91T	6 J x 15 ⇒ page 197	38	Yes	General notes on winter tyres
	Modification	205/55 R 16 91H	$6^1/_2$ J x 16 ⇒ page 201	42	No	Tyre makes recommended by Volkswagen: ◆ Summer tyres ⇒ page 369 ◆ All-season tyres ⇒ page 382 ◆ Winter tyres ⇒ page 391
		225/45 R 17 91W	7 J x 17 ⇒ page 205	38	No	
	Winter tyres	195/65 R 15 91Q/T	6 J x 15 ⇒ page 197	38	Yes	
		205/55 R 16 91T/H	$5^1/_2$ J x 16 ⇒ page 200	36	Yes	
1.9l 66 kW TDI	Standard tyres	195/65 R 15 91T	6 J x 15 ⇒ page 197	38	Yes	The 225/45 R 17 tyre may be mounted on the 7 J x 17 or the $7^1/_2$ J x 17 rim only if the listed conditions ⇒ page 208 are fulfilled!
	Modification	205/55 R 16 91H	$6^1/_2$ J x 16 ⇒ page 201	42	No	
		225/45 R 17 91W	7 J x 17 ⇒ page 205	38	No	
		225/45 R 17 91W	$7^1/_2$ J x 17 ⇒ page 207	38	No	
	Winter tyres	195/65 R 15 91Q/T	6 J x 15 ⇒ page 197	38	Yes	
		205/55 R 16 91T/H	$5^1/_2$ J x 16 ⇒ page 200	36	Yes	
1.6l 74 kW, 75 kW, 77 kW, 81 kW, 2.0l 85 kW petrol engine; 2.0l 85 kW bi-fuel 1.9l 74 kW, 81 kW, 85 kW TDI	Standard tyres	195/65 R 15 91H	6 J x 15 ⇒ page 197	38	Yes	The adhesive weights for balancing must be attached to the inner side of the rim of $6^1/_2$ J x 16 aluminium wheels!

Protected by copyright. Copying for private or commercial purposes, in part or in whole, is not permitted unless authorised by Volkswagen AG. Volkswagen AG does not guarantee or accept any liability with respect to the correctness of information in this document. Copyright by Volkswagen AG.

satelettronica

Protected by copyright. Copyright by Volkswagen AG. Volkswagen AG does not guarantee or accept any liability with respect to the correctness of information in this document. Copying for private or commercial purposes, in part or in whole, is not permitted unless authorised by Volkswagen AG.

Model engine output	Tyres	Tyre size	Wheel	Off-set in mm	Snow chains	Remarks
	Modification	205/55 R 16 91H	6 1/2 J x 16 ⇒ page 201	42	No	4Motion vehicles: Snow chains are permitted on the front wheels only.
		225/45 R 17 91W	7 J x 17 ⇒ page 205	38	No	
		225/45 R 17 91W	7 1/2 J x 17 ⇒ page 207	38	No	
	Winter tyres	195/65 R 15 91Q/T	6 J x 15 ⇒ page 197	38	Yes	
		205/55 R 16 91T/H	5 1/2 J x 16 ⇒ page 200	36	Yes	
1.8l 92 kW; 1.8l 110 kW; 2.3l 110 kW petrol engines; 1.9l 96 kW TDI; 1.9l 110 kW TDI	Standard tyres	195/65 R15 91V	6 J x 15 ⇒ page 197	38	Yes	
	Modification	205/55 R 16 91V	6 1/2 J x 16 ⇒ page 201	42	No	
		225/45 R 17 91W	7 J x 17 ⇒ page 205	38	No	
		225/45 R 17 91W	7 1/2 J x 17 ⇒ page 207	38	No	
	Winter tyres	195/65 R 15 91Q/T	6 J x 15 ⇒ page 197	38	Yes	
		205/55 R 16 91T/H	5 1/2 J x 16 ⇒ page 200	36	Yes	
1.8l 132 kW; 2.3l 125 kW	Standard tyres	205/55 R 16 91W	6 1/2 J x 16 ⇒ page 203	42	No	
	Modification	205/55 R 16 91H	6 1/2 J x 16 ⇒ page 203	42	No	
		225/45 R 17 91W	7 J x 17 ⇒ page 205	38	No	
		225/45 R 17 91W	7 1/2 J x 17 ⇒ page 207	38	No	
	Winter tyres	205/55 R 16 91T/H	5 1/2 J x 16 ⇒ page 200	36	Yes	
2.8l 150 kW	Standard tyres	205/55 R 16 91W	6 1/2 J x 16 ⇒ page 203	42	No	

satelettronica

Model engine output	Tyres	Tyre size	Wheel	Off-set in mm	Snow chains	Remarks
	Modification	225/45 R 17 91W	7 J x 17 ⇒ page 205	38	No	
		225/45 R 17 91W	$7^1/_2$ J x 17 ⇒ page 207	38	No	
	Winter tyres	205/55 R 16 91T/H	$5^1/_2$ J x 16 ⇒ page 200	36	Yes	

Tyre pressures can be found on the inside of the fuel tank flap or in ⇒ Maintenance ; Booklet 37 .

15.2 Wheel allocation for Golf Estate, Golf Estate 4Motion, Bora Estate, Bora Estate 4Motion, type 1J

Wheel allocation for Golf Estate, Golf Estate 4Motion; type 1J from model year 1999 through model year 2006

Wheel allocation for Bora Estate, Bora Estate 4Motion; Type 1J from model year 1999 through model year 2005

Explanation of information on wheels

Wheel bolt torque settings ⇒ Running gear, axles, steering - front and four-wheel drive; Rep. gr. 44 ; Wheel bolt torque settings

Pitch circle diameter	100 mm
Number of wheel bolt holes:	5

15.2.1 6 J x 15

Caution

Observe the allocation of wheels and tyres to the respective engines, which are listed in the overview table ⇒ page 195 .

For vehicles with maximum permitted axle load of 1,000 kg

1J0 601 025 B, 1J0 601 025 AA - Wheel and tyre combination ⇒ page 195

Size:	6 J x 15
Wheel offset in mm:	38
Wheel load in kg:	500

For vehicles with maximum permitted axle load of 1,060 kg

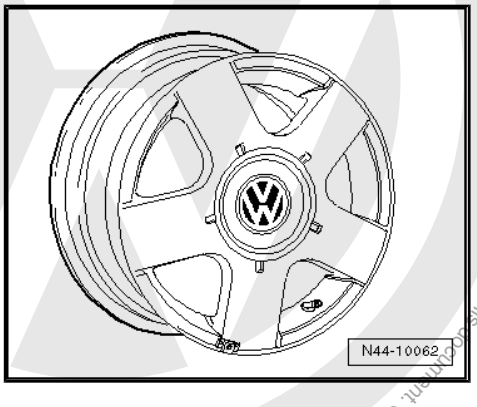

Protected by copyright. Copying for private or commercial purposes, in part or in whole, is not permitted unless authorised by Volkswagen AG. Volkswagen AG does not guarantee or accept any liability with respect to the correctness of information in this document. Copyright by Volkswagen AG.
satelettronica

1J0 601 025 Q - Wheel and tyre combination ⇒ page 195

Size:	6 J x 15
Wheel offset in mm:	38
Wheel load in kg:	530

For vehicles through 96 kW and petrol engines to 110 kW

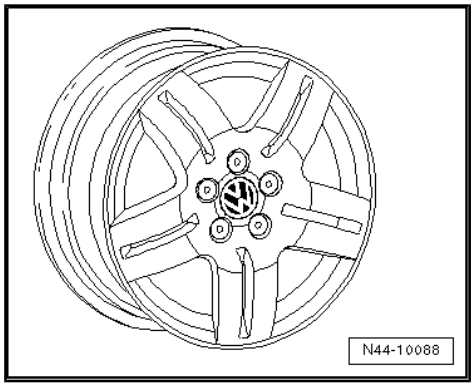

1J0 601 027 K - Wheel and tyre combination ⇒ page 195

Size:	6 J x 15
Wheel offset in mm:	38
Wheel load in kg:	550

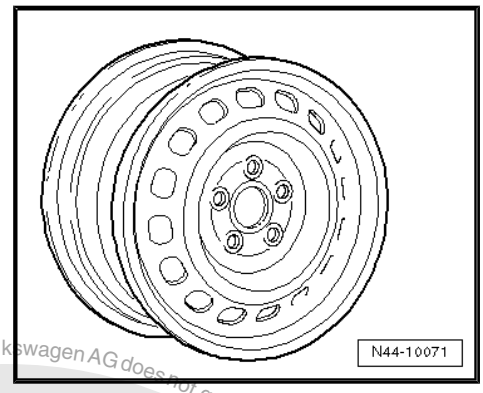

1J0 601 027 H, 1J0 601 027 Q - Wheel and tyre combination ⇒ page 195

Size:	6 J x 15
Wheel offset in mm:	38
Wheel load in kg:	550

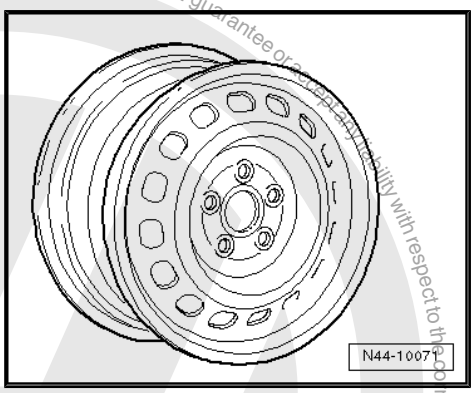

1J0 601 025 AK - Wheel and tyre combination ⇒ page 195

Size:	6 J x 15
Wheel offset in mm:	38
Wheel load in kg:	580

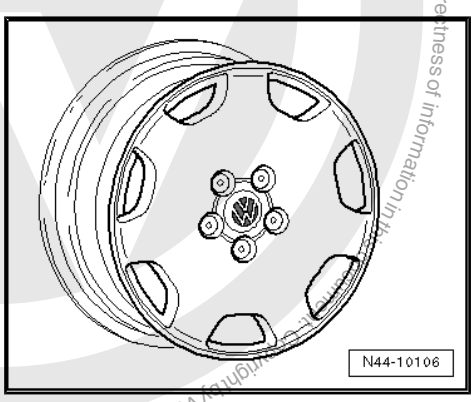

Protected by copyright. Copying for private or commercial purposes, in part or in whole, is not permitted unless authorised by Volkswagen AG. Volkswagen AG does not guarantee or accept any liability with respect to the correctness of information. Copyright by Volkswagen AG.
satelettronica

1J0 601 025 P, 1J0 601 025 AL - Wheel and tyre combination
⇒ page 195

Size:	6 J x 15
Wheel offset in mm:	38
Wheel load in kg:	550

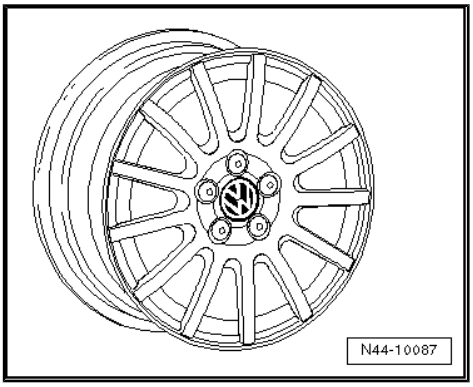

1C0 601 025 F - Wheel and tyre combination ⇒ page 195

Size:	6 J x 15
Wheel offset in mm:	38
Wheel load in kg:	550

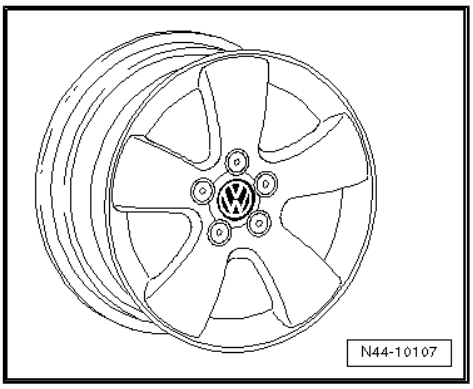

1J0 601 025 BD - Wheel and tyre combination ⇒ page 195

Size:	6 J x 15
Wheel offset in mm:	38
Wheel load in kg:	580

For vehicles with 110 kW TDI and petrol engines 1.8l 132 kW, 2.3l 125 kW, 2.8l 150 kW

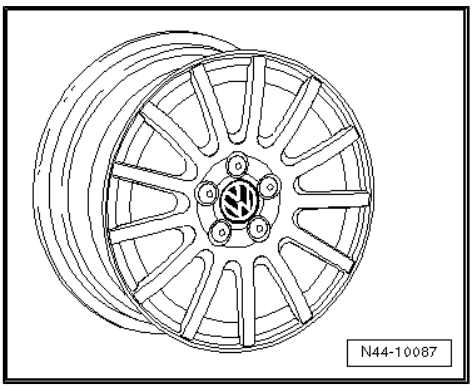

1J0 601 025 P, 1J0 601 025 AL - Wheel and tyre combination
⇒ page 196

Size:	6 J x 15
Wheel offset in mm:	38
Wheel load in kg:	550

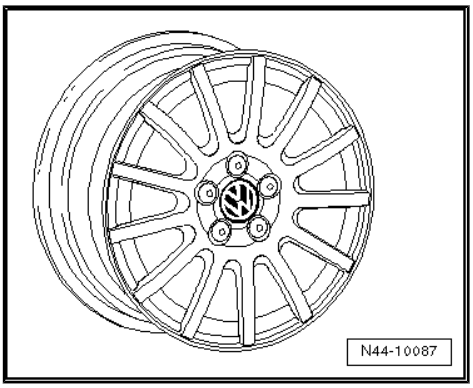

Protected by copyright. Copyright by Volkswagen AG.
Volkswagen AG. Volkswagen AG does not guarantee or accept any liability with respect to the correctness of information in this document. Copyright by Volkswagen AG. Protected by copyright. Copying for private or commercial purposes, in part or in whole, is not permitted unless authorised by Volkswagen AG.
satelettronica

1J0 601 025 BD - Wheel and tyre combination ⇒ page 196

Size:	6 J x 15
Wheel offset in mm:	38
Wheel load in kg:	580

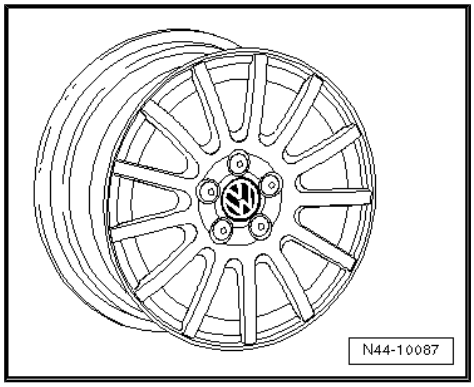

15.2.2 5$^1/_2$ J x 16

Caution

Observe the allocation of wheels and tyres to the respective engines, which are listed in the overview table ⇒ page 195 *.*

For vehicles through 96 kW and petrol engines to 110 kW

For vehicles with 110 kW TDI and petrol engines 1.8l 132 kW, 2.3l 125 kW, 2.8l 150 kW

Snow tyres

1J0 601 025 M, 1J0 601 025 AF - Wheel and tyre combination ⇒ page 195

Size:	5$^1/_2$ J x 16
Wheel offset in mm:	36
Wheel load in kg:	550

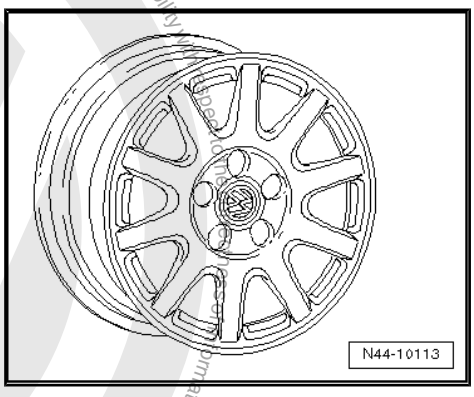

1J0 601 025 AP - Wheel and tyre combination ⇒ page 195

Size:	5$^1/_2$ J x 16
Wheel offset in mm:	36
Wheel load in kg:	550

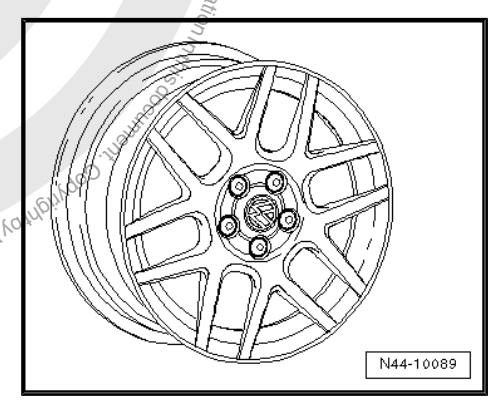

Protected by copyright. Copying for private or commercial purposes, in part or in whole, is not permitted unless authorised by Volkswagen AG. Volkswagen AG does not guarantee or accept any liability with respect to the correctness of information in this document. Copyright by Volkswagen AG.
satelettronica

15.2.3 6 1/2 J x 16

Caution

Observe the allocation of wheels and tyres to the respective engines, which are listed in the overview table ⇒ page 195 *.*

For vehicles with maximum permitted axle load of 1,000 kg

1C0 601 025 A, 1C0 601 025 D - Wheel and tyre combination
⇒ page 195

Size:	6 1/2 J x 16
Wheel offset in mm:	42
Wheel load in kg:	500

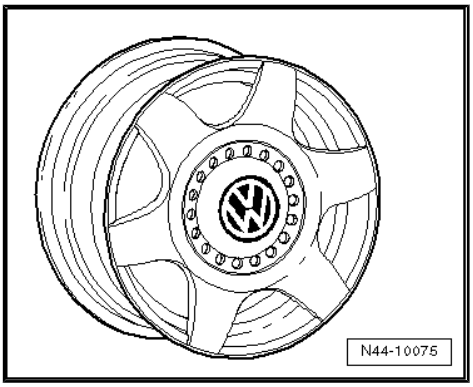

For vehicles with maximum permitted axle load of 1,060 kg

1J0 601 025 F, 1J0 601 025 AC - Wheel and tyre combination
⇒ page 195

Size:	6 1/2 J x 16
Wheel offset in mm:	42
Wheel load in kg:	530

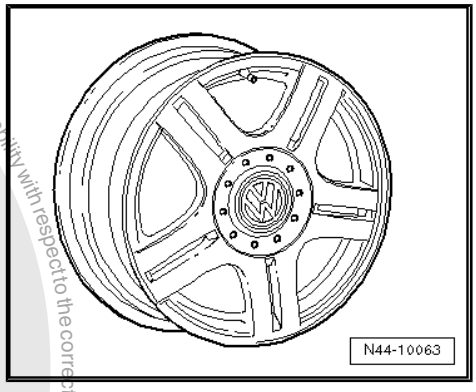

1J0 601 025 E, 1J0 601 025 AD - Wheel and tyre combination
⇒ page 195

Size:	6 1/2 J x 16
Wheel offset in mm:	42
Wheel load in kg:	530

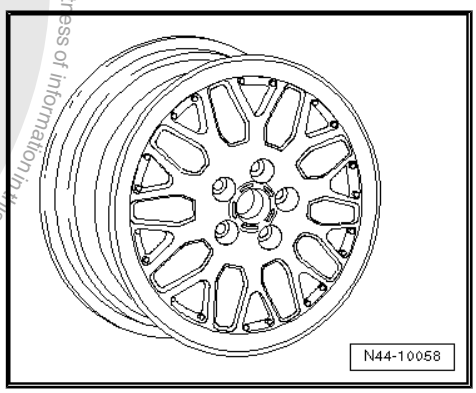

Protected by copyright. Copying for private and commercial purposes, in part or in whole, is not permitted unless authorised by Volkswagen AG. Volkswagen AG does not guarantee or accept any liability with respect to the correctness of information in this document. Copyright by Volkswagen AG.
satelettronica

1J0 601 025 H, 1J0 601 025 AH - Wheel and tyre combination
⇒ page 195

Size:	$6^1/_2$ J x 16
Wheel offset in mm:	42
Wheel load in kg:	530

For vehicles through 96 kW and petrol engines to 110 kW

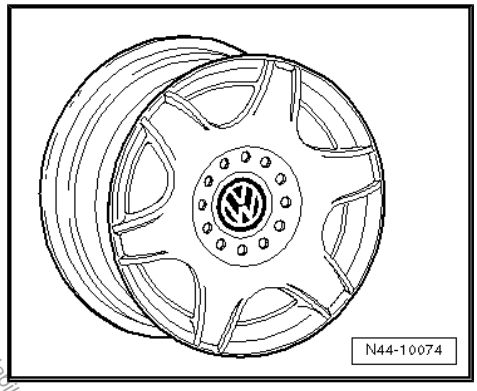

1J0 601 027 R - Wheel and tyre combination ⇒ page 195

Size:	$6^1/_2$ J x 16
Wheel offset in mm:	42
Wheel load in kg:	550

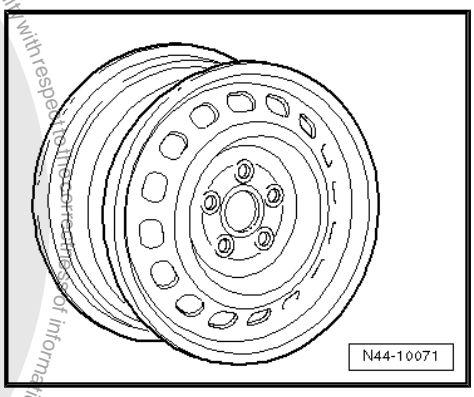

1J0 601 025 L, 1J0 601 025 AE - Wheel and tyre combination
⇒ page 195

Size:	$6^1/_2$ J x 16
Wheel offset in mm:	42
Wheel load in kg:	550

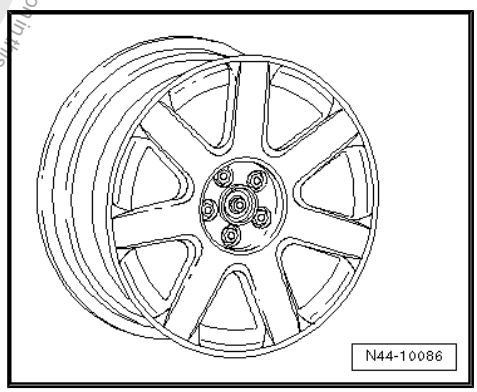

1J0 601 025 R, 1J0 601 025 AN - Wheel and tyre combination
⇒ page 195

Size:	$6^1/_2$ J x 16
Wheel offset in mm:	42
Wheel load in kg:	550

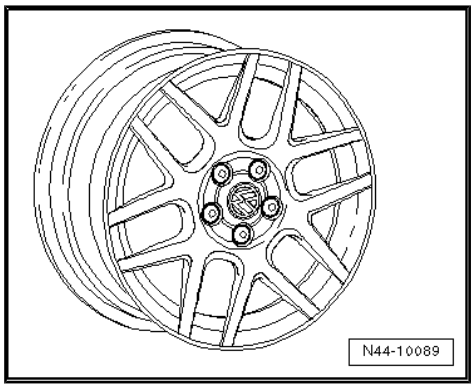

Protected by copyright. Copyright by Volkswagen AG.
Copying for private or commercial purposes, in part or in whole, is not permitted unless authorised by Volkswagen AG. Volkswagen AG does not guarantee or accept any liability with respect to the correctness of information in this document.
satelettronica

1J0 601 025 T, 1J0 601 025 AJ - Wheel and tyre combination
⇒ page 195

Size:	$6^1/_2$ J x 16
Wheel offset in mm:	42
Wheel load in kg:	550

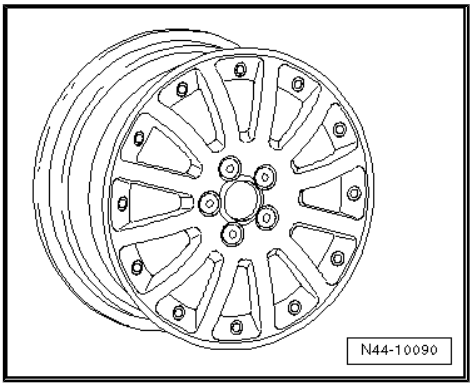

1C0 601 025 G - Wheel and tyre combination ⇒ page 195

Size:	$6^1/_2$ J x 16
Wheel offset in mm:	42
Wheel load in kg:	550

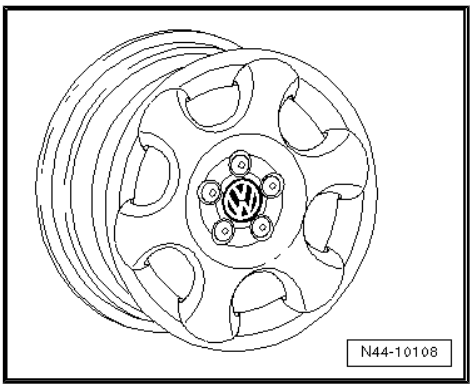

1C0 601 025 H - Wheel and tyre combination ⇒ page 195

Size:	$6^1/_2$ J x 16
Wheel offset in mm:	42
Wheel load in kg:	550

For vehicles with 110 kW TDI and petrol engines 1.8l 132 kW, 2.3l 125 kW, 2.8l 150 kW

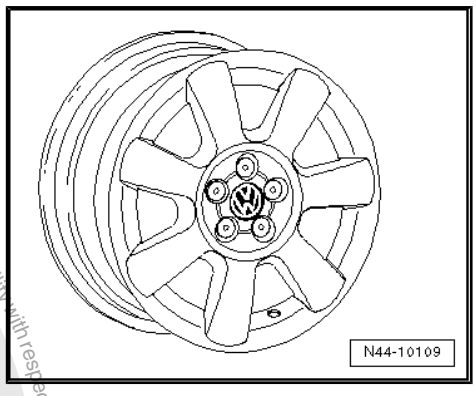

1J0 601 027 L, 1J0 601 027 R - Wheel and tyre combination
⇒ page 196

Size:	$6^1/_2$ J x 16
Wheel offset in mm:	42
Wheel load in kg:	550

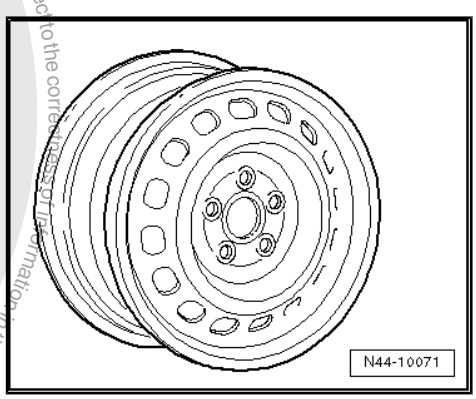

Protected by copyright. Copying for private or commercial purposes, in part or in whole, is not permitted unless authorised by Volkswagen AG. Volkswagen AG does not guarantee or accept any liability with respect to the correctness of information in this document. Copyright by Volkswagen AG.
satelettronica

Protected by copyright. Copying for private or commercial purposes, in part or in whole, is not permitted unless authorised by Volkswagen AG. Volkswagen AG does not guarantee or accept any liability with respect to the correctness of information in this document. Copyright by Volkswagen AG.

1J0 601 025 F, 1J0 601 025 AC - Wheel and tyre combination
⇒ page 196

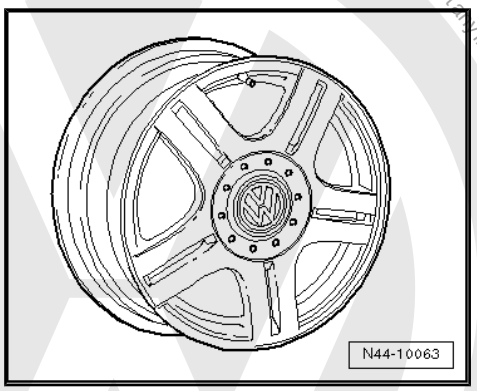

Note

This rim is allowed only for vehicles with a maximum permitted axle load of 1060 kg.

Size:	$6^1/_2$ J x 16
Wheel offset in mm:	42
Wheel load in kg:	530

1J0 601 025 L - Wheel and tyre combination ⇒ page 196

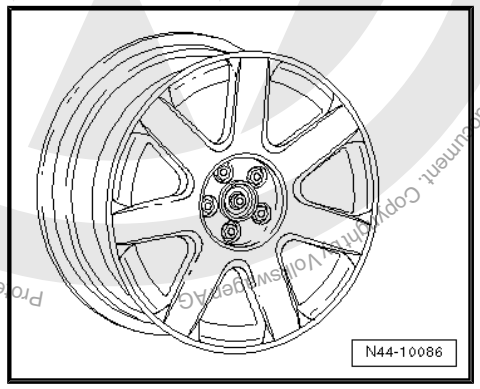

Size:	$6^1/_2$ J x 16
Wheel offset in mm:	42
Wheel load in kg:	550

1J0 601 025 AN, 1J0 601 025 R - Wheel and tyre combination
⇒ page 196

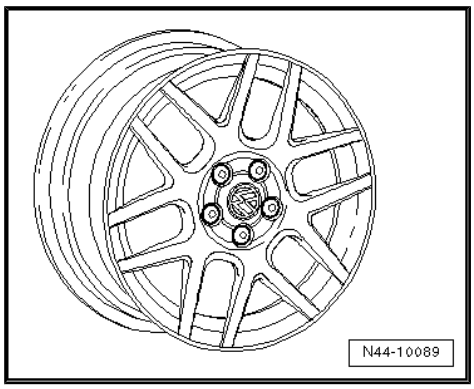

Size:	$6^1/_2$ J x 16
Wheel offset in mm:	42
Wheel load in kg:	550

1J0 601 025 T, 1J0 601 025 AJ - Wheel and tyre combination
⇒ page 196

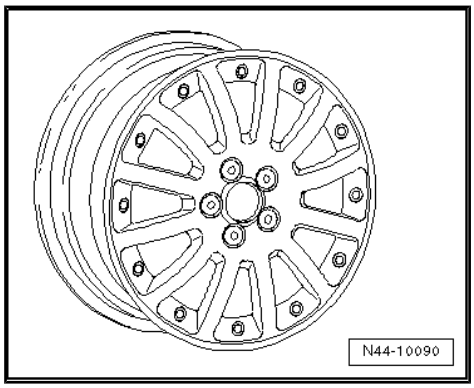

Size:	$6^1/_2$ J x 16
Wheel offset in mm:	42
Wheel load in kg:	550

satelettronica

1C0 601 025 G - Wheel and tyre combination ⇒ page 196

Size:	6 1/2 J x 16
Wheel offset in mm:	42
Wheel load in kg:	550

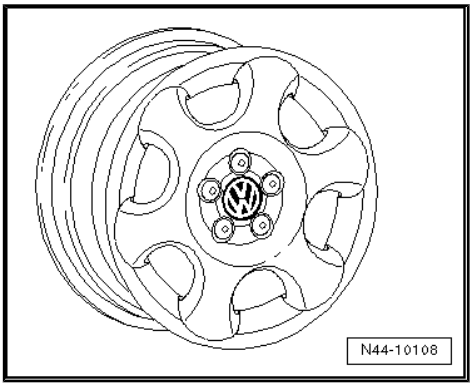

1C0 601 025 H - Wheel and tyre combination ⇒ page 196

Size:	6 1/2 J x 16
Wheel offset in mm:	42
Wheel load in kg:	550

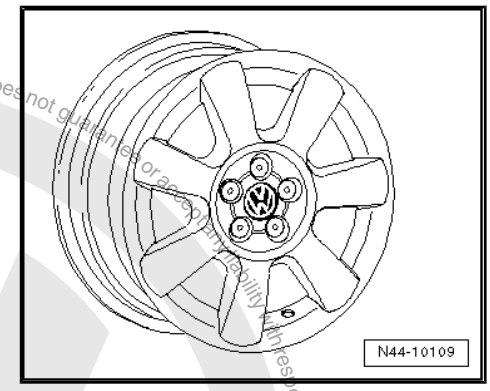

15.2.4 7 J x 17

The following wheels are permitted only if the stated conditions ⇒ page 208 are fulfilled.

> ⚠ **Caution**
>
> *Observe the allocation of wheels and tyres to the respective engines, which are listed in the overview table ⇒ page 195 .*

1J0 601 025 J, 1J0 601 025 S - Wheel and tyre combination ⇒ page 195

Size:	7 J x 17
Wheel offset in mm:	38
Wheel load in kg:	580

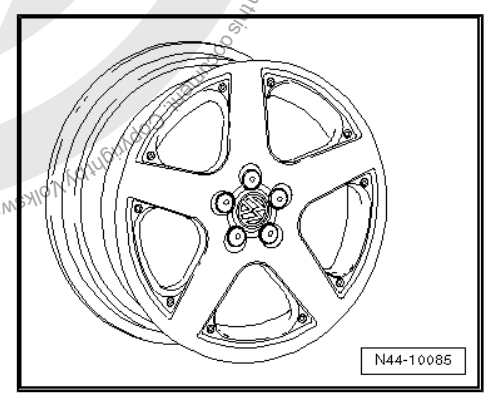

Protected by copyright. Copying for private or commercial purposes, in part or on whole, is not permitted unless authorised by Volkswagen AG. Volkswagen AG does not guarantee or accept any liability with respect to the correctness of information in this document. Copyright by Volkswagen AG.
satelettronica

1J0 601 025 AB - Wheel and tyre combination ⇒ page 195

Size:	7 J x 17
Wheel offset in mm:	38
Wheel load in kg:	550

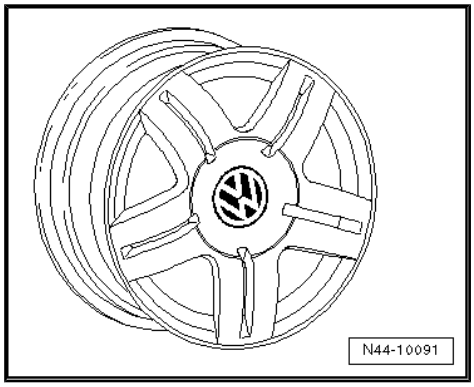

1C0 601 025 B, 1C0 601 025 E - Wheel and tyre combination ⇒ page 195

Size:	7 J x 17
Wheel offset in mm:	38
Wheel load in kg:	550

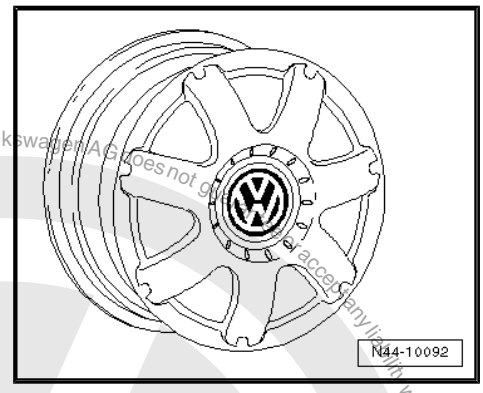

1C0 601 025 J - Wheel and tyre combination ⇒ page 195

Size:	7 J x 17
Wheel offset in mm:	38
Wheel load in kg:	550

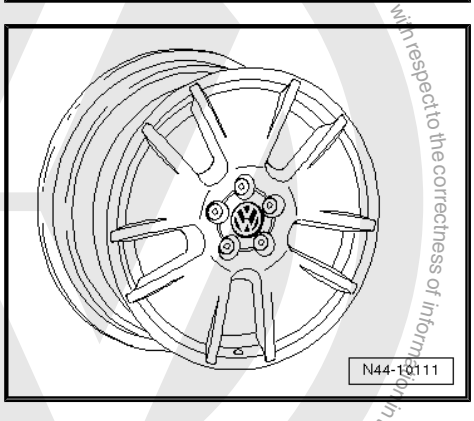

1C0 601 025 K, 1C0 601 025 Q - Wheel and tyre combination ⇒ page 195

Alloy wheels with exchangeable trim elements

Size:	7 J x 17
Wheel offset in mm:	38
Wheel load in kg:	550

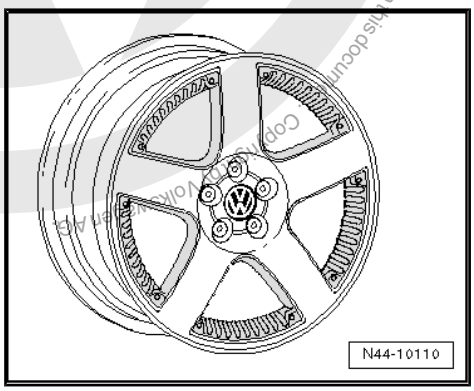

Protected by copyright. Copyright privilege or commercial purposes, in part or in whole is not permitted unless authorised by Volkswagen AG. Volkswagen AG does not guarantee or accept any liability with respect to the correctness of information in this document.
satelettronica

Protected by copyright. Copying for private or commercial purposes, in part or in whole, is not permitted unless authorised by Volkswagen AG. Volkswagen AG does not guarantee or accept any liability with respect to the correctness of information in this document.

1J0 601 025 BE - Wheel and tyre combination ⇒ page 195

Size:	7 J x 17
Wheel offset in mm:	38
Wheel load in kg:	550

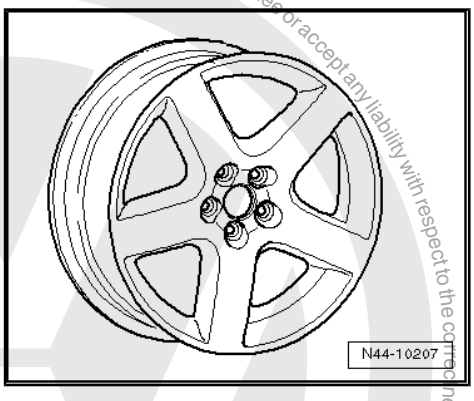

1J0 601 025 AS - Wheel and tyre combination ⇒ page 195

Size:	7 J x 17
Wheel offset in mm:	38
Wheel load in kg:	550

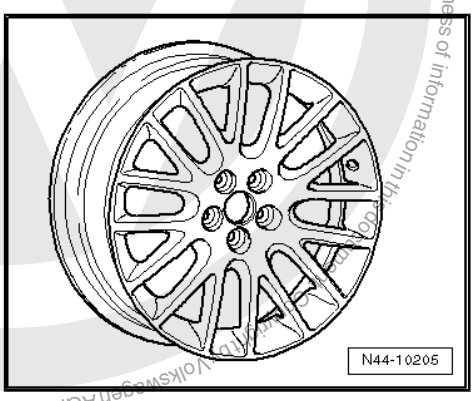

1C0 601 025 M - Wheel and tyre combination ⇒ page 195

Size:	7 J x 17
Wheel offset in mm:	38
Wheel load in kg:	550

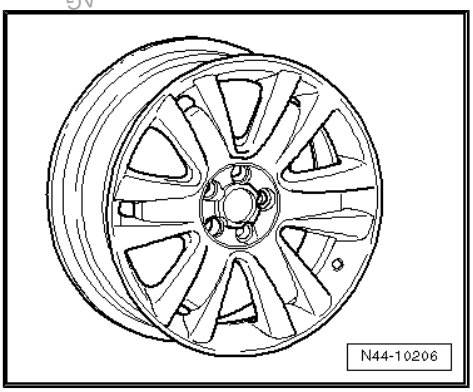

15.2.5 7 1/2 J x 17

The following wheels are permitted only if the stated conditions ⇒ page 208 **are fulfilled.**

> ⚠ **Caution**
>
> *Observe the allocation of wheels and tyres to the respective engines, which are listed in the overview table* ⇒ page 195 *.*

satelettronica

1J0 601 025 BF - Wheel and tyre combination ⇒ page 195

Size:	$7^1/_2$ J x 17
Wheel offset in mm:	38
Wheel load in kg:	550

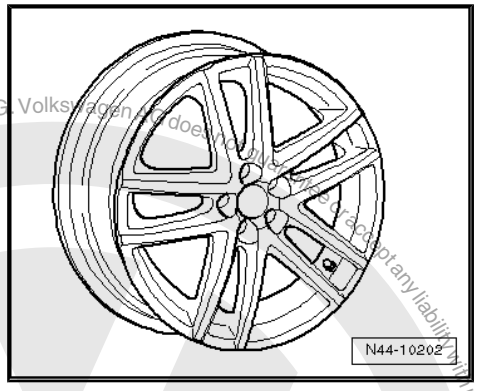

1J0 601 025 BH - Wheel and tyre combination ⇒ page 195

Size:	$7^1/_2$ J x 17
Wheel offset in mm:	38
Wheel load in kg:	560

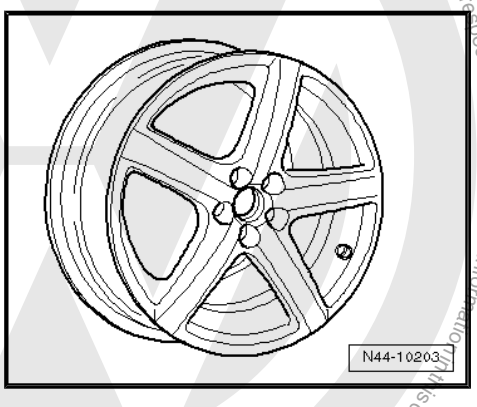

15.3 Conditions for fitting 17" wheels and tyres

17" wheels with 225/45 R 17 are possible only:

1. For vehicles from model year 2001.

2. If 17" sports running gear and a steering box with reduced steering arm travel are installed in the vehicle

Allocation of steering box PR No. to engine:	
PR No. of steering box	**Engine**
QZ 3[11)]	1.8l; 2.0l; 2.3l petrol engines; 1.9l diesel engines
QZ 4[11)]	Through 1.6l petrol engines
QZ 5[11)]	VR6 (US version); VR6 4Motion

11) Replacement part numbers ⇒ Electronic parts catalogue „ETKA“

3. If tyres with a maximum width of 218 mm are used.

4. If snow chains are not used.

Maximum width of 17" tyres

If a vehicle is retrofitted with 17" tyres or if existing 17" tyres are renewed, use only tyres with a maximum width -a- which does not exceed 218 mm during use [12)].

12) The measured width of the tyre including lettering on 7 J x 17 or $7^1/_2$ J x 17 and at the specified tyre pressure.

If wider tyres are used, under certain circumstances, the tyres may contact the front axle and the bodywork while the car is being driven.

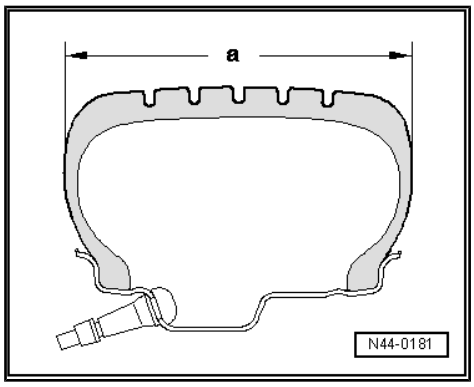

Protected by copyright. Copyright by Volkswagen AG. Volkswagen AG does not accept any liability with respect to the correctness of information in this document. Copyright by Volkswagen AG. Protected by copyright. Copying for private or commercial purposes, in part or in whole, is not permitted unless authorised by Volkswagen AG.
satelettronica

16 Golf Cabriolet, from model year 1994 through model year 1997

General

Volkswagen vehicles are built according to the latest findings in safety engineering. To keep it that way, we recommend the use of genuine Volkswagen spare parts only. You can recognise this by the VW Audi logo and by the part number. It has been established that these parts are reliable, safe and suitable.

Despite constant appraisal of the market, we cannot assess other products on these points, even when in isolated cases they have been passed by official inspectors or have been granted official approval. Therefore, we cannot, of course, assume any liability if these products are installed.

WARNING

The products from Volkswagen genuine parts and Votex genuine accessories may differ in fitting requirements, torque specifications and so on.

Always follow the respective fitting and operating instructions.

The wheel and tyre combinations or changes listed in the vehicle tables refer exclusively to Volkswagen Genuine wheels. Approval of wheel and tyre combinations or a change to wheels from the accessories trade is not possible with the parts certificate attached here.

WARNING

The fitting instructions and torque specifications for wheels from Votex genuine accessories may differ from those intended for wheels from Volkswagen genuine parts.

Therefore, always observe the torque settings for the wheel bolts as well as the respective fitting and operating instructions.

Protected by copyright. Copying for private or commercial purposes, in part or in whole, is not permitted unless authorised by Volkswagen AG. Volkswagen AG does not guarantee or accept any liability with respect to the correctness of information in this document. Copyright by Volkswagen AG.
satelettronica

16.1 Golf Cabriolet, type 1EX0, from model year 1994 through model year 1997

Appendix 2 to Parts Certificate 1479/00

General type approval No.: G 407

Overview

Model engine output	Tyres	Tyre size	Wheel	Off-set in mm	Snow chains	Remarks
55 kW, 66 kW	Standard tyres	185/60 R 14 82T	6 J x 14 ⇒ page 210	43/45	Yes	205/45 R 16 83 H are only permissible if shock absorbers 1HM 513 031 B are installed on the rear axle and no equipment to lower vehicle is installed!
	Modification	185/60 R 14 82H	6 J x 14 ⇒ page 210	43/45	Yes	

Model engine output	Tyres	Tyre size	Wheel	Off-set in mm	Snow chains	Remarks
		195/50 R 15 82H	6 J x 15 ⇒ page 212	45	Yes	Winter tyres 175/70 R 13 82Q are permitted only on vehicles through 12.94.
		205/45 R 16 83H	6 1/2 J x 16 ⇒ page 212	45	No	
	Winter tyres	175/65 R 14 82Q	6 J x 14 ⇒ page 210	43/45	Yes	
74 kW, 81 kW, 85 kW	Standard tyres	185/60 R 14 82H	6 J x 14 ⇒ page 210	43/45	Yes	General notes on winter tyres
	Modification	185/60 R 14 82T	6 J x 14 ⇒ page 210	43/45	Yes	
		195/50 R 15 82H	6 J x 15 ⇒ page 212	45	Yes	Tyre makes recommended by Volkswagen: ♦ Summer tyres ⇒ page 367 ♦ All-season tyres ⇒ page 381 ♦ Winter tyres ⇒ page 389
		205/45 R 16 83H	6 1/2 J x 16 ⇒ page 212	45	No	
	Winter tyres	175/65 R 14 82Q	6 J x 14 ⇒ page 210	43/45	Yes	

Tyre pressures can be found on the inside of the fuel tank flap or in ⇒ Maintenance ; Booklet 35 .

16.2 Wheel allocation for Golf Cabriolet, type 1EX0, from model year 1994 through model year 1997

Explanation of information on wheels

Torque settings for wheel bolts ⇒ Running gear; Rep. gr. 40 ; Repairing front wheel suspension (basic running gear); Removing and installing wheel bearing, strut and drive shaft (basic running gear)

Pitch circle diameter	100 mm
Number of wheel bolt holes:	4

16.2.1 6 J x 14

Caution

Observe the allocation of wheels and tyres to the respective engines, which are listed in the overview table ⇒ page 209 .

Protected by copyright. Copyright by Volkswagen AG. Distribution to third parties, or publication of this document in whole or in part for commercial purposes, is not permitted unless authorised by Volkswagen AG. Volkswagen AG does not guarantee or accept any liability with respect to the correctness of information in this document.
satelettronica

1H0 601 025 P - Wheel and tyre combination ⇒ page 209

Size:	6 J x 14
Wheel offset in mm:	45
Wheel load in kg:	460

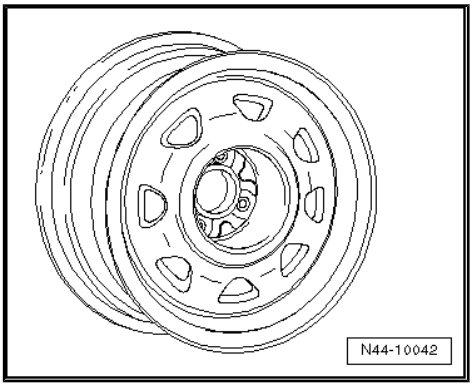

1HM 601 025 - Wheel and tyre combination ⇒ page 209

Size:	6 J x 14
Wheel offset in mm:	45
Wheel load in kg:	460

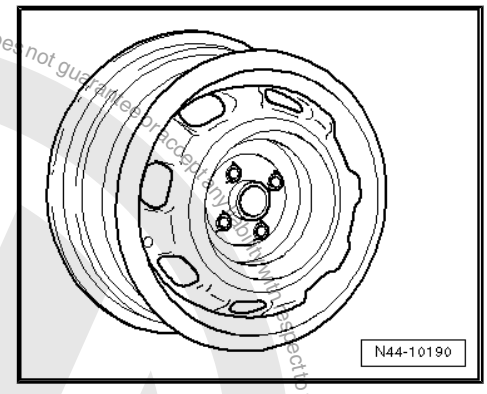

1H0 601 025 B - Wheel and tyre combination ⇒ page 209

Size:	6 J x 14
Wheel offset in mm:	45
Wheel load in kg:	460

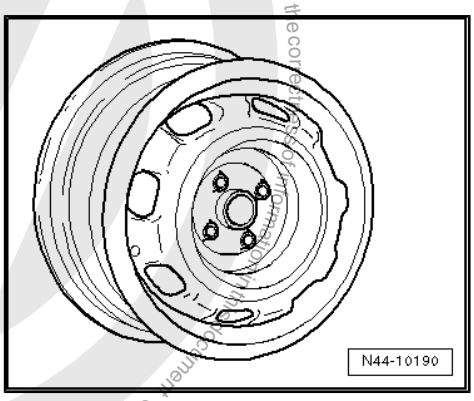

1H0 601 027 A - Wheel and tyre combination ⇒ page 209

Size:	6 J x 14
Wheel offset in mm:	43
Wheel load in kg:	500

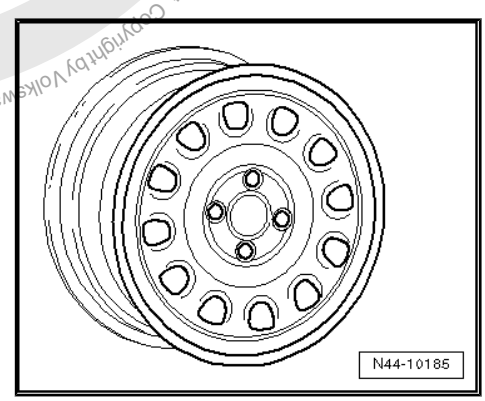

Copyright by Volkswagen AG. Protected by copyright. Copying for private or commercial purposes, in part or in whole, is not permitted unless authorised by Volkswagen AG. Volkswagen AG does not guarantee or accept any liability with respect to the correctness and completeness of this document.
satelettronica

1H0 601 025 R - Wheel and tyre combination ⇒ page 209

Size:	6 J x 14
Wheel offset in mm:	45
Wheel load in kg:	500

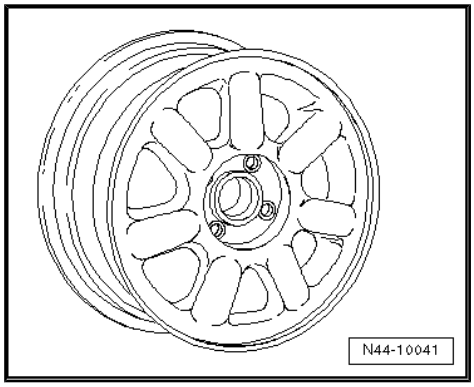

16.2.2 6 J x 15

Caution

Observe the allocation of wheels and tyres to the respective engines, which are listed in the overview table ⇒ page 209 *.*

1H0 601 025 AD - Wheel and tyre combination ⇒ page 210

Size:	6 J x 15
Wheel offset in mm:	45
Wheel load in kg:	460

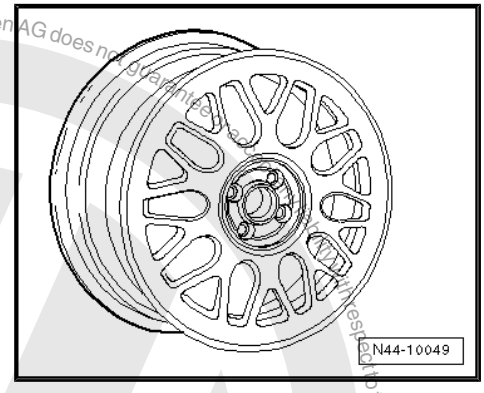

1H0 601 025 AE - Wheel and tyre combination ⇒ page 210

Size:	6 J x 15
Wheel offset in mm:	45
Wheel load in kg:	480

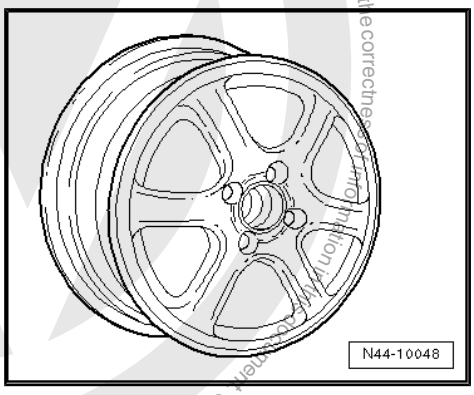

16.2.3 6 1/2 J x 16

Caution

Observe the allocation of wheels and tyres to the respective engines, which are listed in the overview table ⇒ page 209 *.*

Protected by copyright. Copying for private or commercial purposes, in part or in whole, is not permitted unless authorised by Volkswagen AG. Volkswagen AG does not give any guarantee as to the correctness of information. Copyright by Volkswagen AG.
satelettronica

1H0 601 025 AJ - Wheel and tyre combination ⇒ page 210

Size:	$6^1/_2$ J x 16
Wheel offset in mm:	45
Wheel load in kg:	480

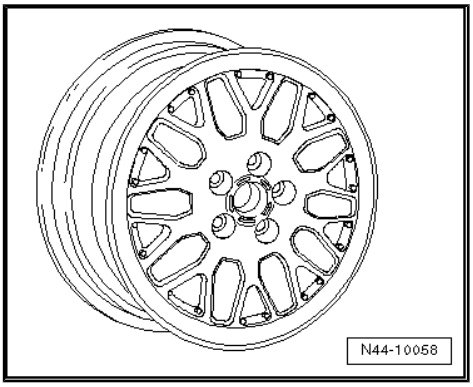

Protected by copyright. Copying for private or commercial purposes, in part or in whole, is not permitted unless authorised by Volkswagen AG. Volkswagen AG does not guarantee or accept any liability with respect to the correctness of information in this document. Copyright by Volkswagen AG.

satelettronica

17 Golf Cabriolet, from model year 1998 through model year 2002

General

Volkswagen vehicles are built according to the latest findings in safety engineering. To keep it that way, we recommend the use of genuine Volkswagen spare parts only. You can recognise this by the VW Audi logo and by the part number. It has been established that these parts are reliable, safe and suitable.

Despite constant appraisal of the market, we cannot assess other products on these points, even when in isolated cases they have been passed by official inspectors or have been granted official approval. Therefore, we cannot, of course, assume any liability if these products are installed.

> ⚠ **WARNING**
>
> *The products from Volkswagen genuine parts and Votex genuine accessories may differ in fitting requirements, torque specifications and so on.*
>
> *Always follow the respective fitting and operating instructions.*

The wheel and tyre combinations or changes listed in the vehicle tables refer exclusively to Volkswagen Genuine wheels. Approval of wheel and tyre combinations or a change to wheels from the accessories trade is not possible with the parts certificate attached here.

> ⚠ **WARNING**
>
> *The fitting instructions and torque specifications for wheels from Votex genuine accessories may differ from those intended for wheels from Volkswagen genuine parts.*
>
> *Therefore, always observe the torque settings for the wheel bolts as well as the respective fitting and operating instructions.*

17.1 Golf Cabriolet; type 1E from model year 1998 through model year 2002

Appendix 2 to Parts Certificate 1486/03

Type Approval No. Cabriolet: e1*96/79*0070*00 through e1*96/79*0070*04

Type Approval No. Cabriolet: e1*98/14*0070*05 bis e1*98/14*0070*10

Overview

Model engine output	Tyres	Tyre size	Wheel	Off-set in mm	Snow chains	Remarks
55 kW petrol engine; 66 kW TDI	Standard tyres	185/60 R 14 82T	6 J x 14 ⇒ page 215	43/45	Yes	General notes on winter tyres
	Modification	195/50 R 15 82H	6 J x 15 ⇒ page 217	43/45	Yes	Tyre makes recommended by Volkswagen:

Protected by copyright. Copying for private or commercial purposes, in part or in whole, is not permitted unless authorised by Volkswagen AG. Volkswagen AG does not guarantee or accept any liability with respect to the correctness of information in this document. Copyright by Volkswagen AG.

satelettronica

Model engine output	Tyres	Tyre size	Wheel	Off-set in mm	Snow chains	Remarks
		205/45 R 16 83H	$6^1/_2$ J x 16 ⇒ page 219	45	No	◆ Summer tyres ⇒ page 370 ◆ All-season tyres ⇒ page 382 ◆ Winter tyres ⇒ page 391
	Winter tyres	175/65 R 14 82Q	6 J x 14 ⇒ page 215	43/45	Yes	205/45 R 16 83H are permitted only if: ◆ shock absorbers 1HM 513 031 B are installed on the rear axle. ◆ No equipment for lowering vehicle is installed. Winter tyres 175/70 R13 82 Q are only possible on vehicles produced up to 12.94.
74 kW, 85 kW petrol engines 81 kW TDI	Standard tyres	185/60 R 14 82H	6 J x 14 ⇒ page 215	43/45	Yes	
	Modification	195/50 R 15 82H	6 J x 15 ⇒ page 217	43/45	Yes	
		205/45 R 16 83H	$6^1/_2$ J x 16 ⇒ page 219	45	No	
	Winter tyres	175/65 R 14 82Q	6 J x 14 ⇒ page 215	43/45	Yes	

Tyre pressures can be found on the inside of the fuel tank flap or in ⇒ Maintenance ; Booklet 35 .

17.2 Wheel allocation for Golf Cabriolet; type 1E from model year 1998 through model year 2002

Explanation of information on wheels

Tightening torques for wheel bolts ⇒ Running gear; Rep. gr. 40

Pitch circle diameter	100 mm
Number of wheel bolt holes:	4

17.2.1 6 J x 14

Caution

Observe the allocation of wheels and tyres to the respective engines, which are listed in the overview table ⇒ page 214 .

Protected by Copyright. Copying for private or commercial purposes, in part or whole, is not permitted unless authorised by Volkswagen AG. Volkswagen AG does not guarantee or accept any liability with respect to the correctness of information in this document. Copyright by Volkswagen AG.

satelettronica

For vehicles with maximum permitted axle load of 920 kg

1H0 601 025 P - Wheel and tyre combination ⇒ page 214

Size:	6 J x 14
Wheel offset in mm:	45
Wheel load in kg:	460

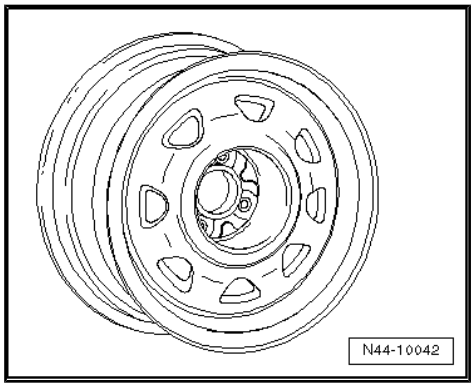

1HM 601 025 - Wheel and tyre combination ⇒ page 214

Size:	6 J x 14
Wheel offset in mm:	45
Wheel load in kg:	460

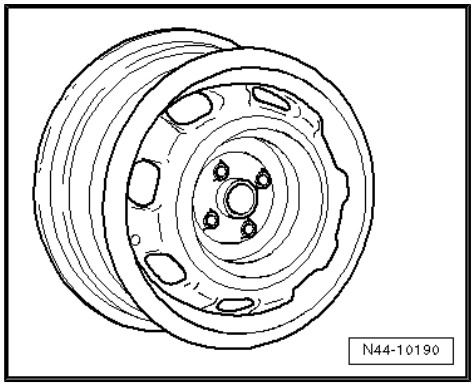

1H0 601 025 B - Wheel and tyre combination ⇒ page 214

Size:	6 J x 14
Wheel offset in mm:	45
Wheel load in kg:	460

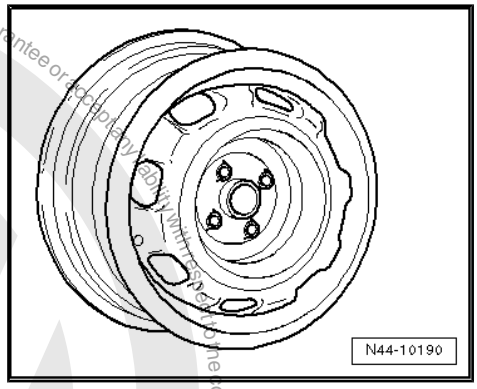

All vehicles

1H0 601 027 A - Wheel and tyre combination ⇒ page 214

Size:	6 J x 14
Wheel offset in mm:	43
Wheel load in kg:	500

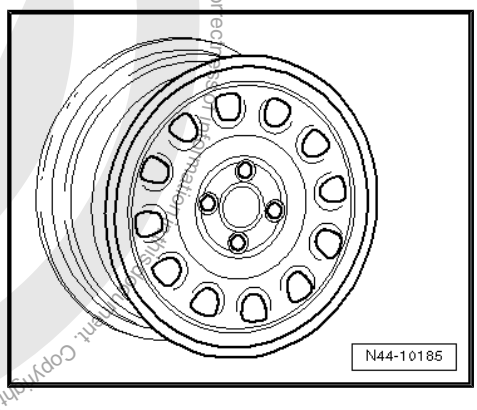

Protected by copyright. Copying for private or commercial purposes, in part or in whole, is not permitted unless authorised by Volkswagen AG. Volkswagen AG does not guarantee or accept any liability with respect to the correctness of information. Copyright by Volkswagen AG.

satelettronica

1H0 601 027 - Wheel and tyre combination ⇒ page 214

Size:	6 J x 14
Wheel offset in mm:	45
Wheel load in kg:	500

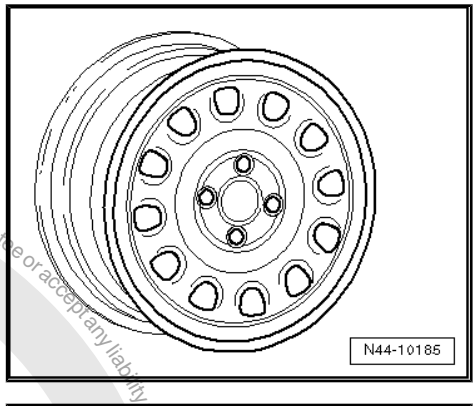

1H0 601 025 R - Wheel and tyre combination ⇒ page 214

Size:	6 J x 14
Wheel offset in mm:	45
Wheel load in kg:	500

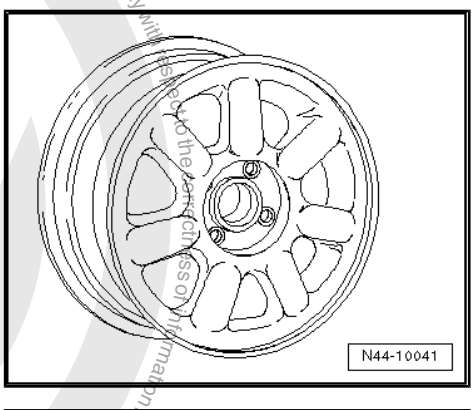

6X0 601 025 D - Wheel and tyre combination ⇒ page 214

Size:	6 J x 14
Wheel offset in mm:	43
Wheel load in kg:	475

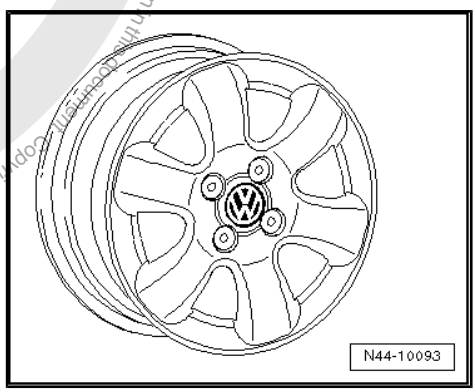

17.2.2 6 J x 15

Caution

Observe the allocation of wheels and tyres to the respective engines, which are listed in the overview table ⇒ page 214 *.*

Protected by copyright. Copying for private or commercial purposes, in part or in whole, is not permitted unless authorised by Volkswagen AG. Volkswagen AG does not guarantee or accept any liability with respect to the correctness of information in this document. Copyright by Volkswagen AG.
satelettronica

For vehicles with maximum permitted axle load of 920 kg

1H0 601 025 AD - Wheel and tyre combination ⇒ page 214

Size:	6 J x 15
Wheel offset in mm:	45
Wheel load in kg:	460

All vehicles

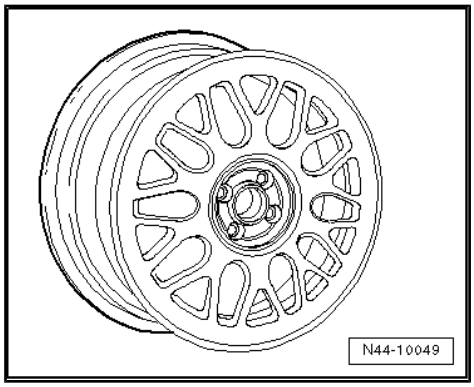

1H0 601 025 AE - Wheel and tyre combination ⇒ page 214

Size:	6 J x 15
Wheel offset in mm:	45
Wheel load in kg:	480

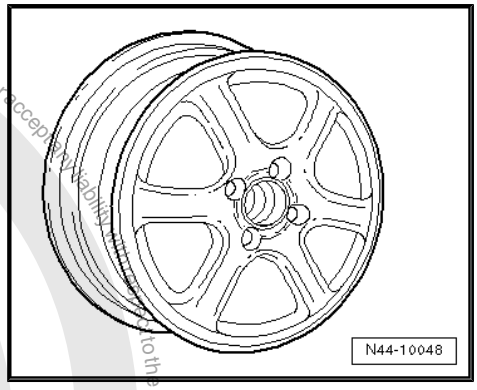

6X0 601 025 C - Wheel and tyre combination ⇒ page 214

Size:	6 J x 15
Wheel offset in mm:	45
Wheel load in kg:	475

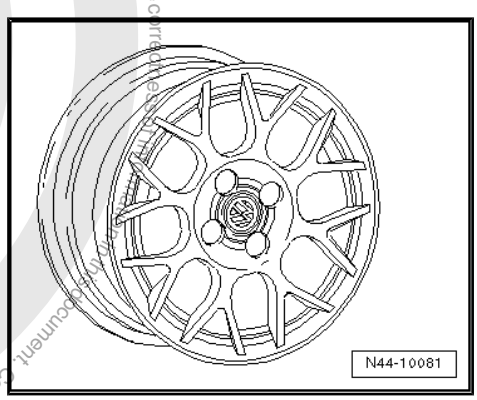

6X0 601 025 E - Wheel and tyre combination ⇒ page 214

Size:	6 J x 15
Wheel offset in mm:	43
Wheel load in kg:	475

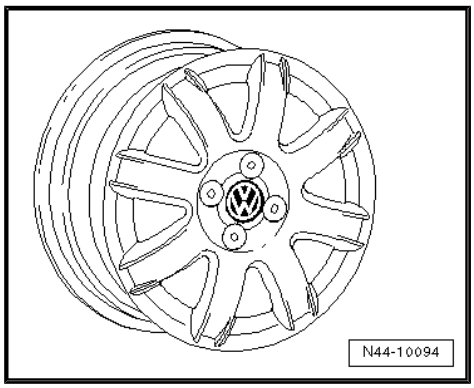

Protected by copyright. Copying for private or commercial purposes, in part or in whole, is not permitted unless authorised by Volkswagen AG. Volkswagen AG does not guarantee or accept any liability with respect to the correctness of information in this document. Copyright by Volkswagen AG.

satelettronica

Protected by copyright. Copying for private or commercial purposes, in part or in whole, is not permitted unless authorised by Volkswagen AG. Volkswagen AG does not guarantee or accept any liability with respect to the correctness of information in this document. Copyright by Volkswagen AG.

17.2.3 6 1/2 J x 16

Caution

Observe the allocation of wheels and tyres to the respective engines, which are listed in the overview table ⇒ page 214 *.*

1H0 601 025 AJ - Wheel and tyre combination ⇒ page 215

Size:	6 1/2 J x 16
Wheel offset in mm:	45
Wheel load in kg:	480

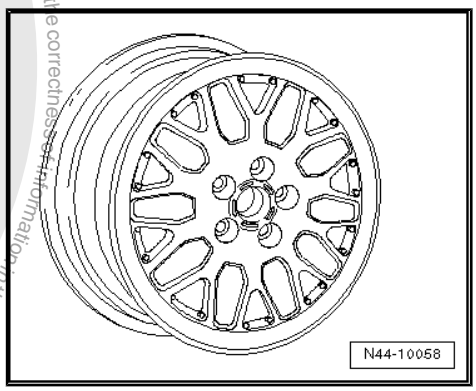

satelettronica

Copyright by Volkswagen AG. Volkswagen AG does not guarantee or accept any liability with respect to the correctness of information in this document.

Model engine output	Tyres	Tyre size	Wheel	Off-set in mm	Snow chains	Remarks
47 kW, 55 kW diesel engine manual gearbox		175/65 R 14 82S	6 J x 14 ⇒ page 223	43/45	Yes	66 kW CL, GL vehicles require T tyres
55 kW and 66 kW with automatic gearbox through 12.94		185/60 R 14 82T	6 J x 14 ⇒ page 223	43/45	Yes	
		195/50 R 15 82H	6 J x 15 ⇒ page 226	45	Yes	
	Winter tyres	175/70 R 13 82Q	$5^1/_2$ J x 13 ⇒ page 222	38	Yes	
55 kW and 66 kW with automatic gearbox to 01.95	Standard tyres	185/60 R 14 82H	6 J x 14 ⇒ page 223	43/45	Yes	
66 kW GT; 66 kW TDI	Modification	185/60 R 14 82T	6 J x 14 ⇒ page 223	43/45	Yes	General notes on winter tyres
		195/50 R 15 82H	6 J x 15 ⇒ page 226	45	Yes	
	Winter tyres	175/65 R 14 82Q	6 J x 14 ⇒ page 223	43/45	Yes	Tyre makes recommended by Volkswagen:
44 kW, 47 kW, 55 kW with ABS from 05.96	Standard tyres	185/60 R 14 82H	6 J x 14 ⇒ page 223	43/45	Yes	◆ Summer tyres ⇒ page 365 ◆ All-season tyres ⇒ page 380 ◆ Winter tyres ⇒ page 389
	Modification	185/60 R 14 82T	6 J x 14 ⇒ page 223	43/45	Yes	
		195/50 R 15 82H	6 J x 15 ⇒ page 226	45	Yes	
	Winter tyres	175/65 R 14 82Q	6 J x 14 ⇒ page 223	43/45	Yes	
74 kW, 85 kW CL, GL, GT; 81 kW TDI	Standard tyres	185/60 R 14 82H	6 J x 14 ⇒ page 223	43/45	Yes	
	Modification	195/50 R 15 82H	6 J x 15 ⇒ page 226	45	Yes	
	Winter tyres	175/65 R 14 82Q	6 J x 14 ⇒ page 223	43/45	Yes	
85 kW GT	Standard tyres	195/50 R 15 82H	6 J x 15 ⇒ page 226	38	Yes	
	Modification	195/50 R 15 82H	$6^1/_2$ J x 15 ⇒ page 228	43	Yes	

Protected by copyright. Copying for private or commercial purposes, in part or in whole, is not permitted unless authorised by Volkswagen AG. Volkswagen AG does not guarantee or accept any liability with respect to the correctness of information in this document. Copyright by Volkswagen AG.

satelettronica

Model engine output	Tyres	Tyre size	Wheel	Off-set in mm	Snow chains	Remarks
		205/50 R 15 86H	$6^1/_2$ J x 15	43	Yes	
	Winter tyres	185/55 R 15 81T reinforced	6 J x 15 ⇒ page 227	38	Yes	Vehicles through 04.96
		185/55 R 15 81T reinforced	6 J x 15 ⇒ page 226	35	Yes	Vehicles from 05.96
128 kW VR6	Standard tyres	205/50 R 15 86V	$6^1/_2$ J x 15 ⇒ page 228	43	Yes	
	Modifica-tion	No changes are permissible apart from the standard wheel and tyre combinations!				
	Winter tyres	185/55 R 15 81T reinforced	6 J x 15 ⇒ page 227	38	Yes	Vehicles through 12.94
		185/55 R 15 81T reinforced	6 J x 15 ⇒ page 228	35	Yes	Vehicles from 01.95

Tyre pressures can be found on the inside of the fuel tank flap or in ⇒ Maintenance ; Booklet 35 .

18.2 Wheel allocation forVento; type 1HX0, 1H

Vento, type 1HX0 from model year 1992 through model year 1997

Vento, type 1H model year 1998

Explanation of information on wheels

Torque specifications for wheel bolts ⇒ Running gear; Rep. gr. 40 ; Repairing front suspension (basic running gear); Removing and installing wheel bearing, strut, drive shaft (basic suspension) or ⇒ Running gear; Rep. gr. 40 ; Repairing front suspension (plus running gear); Removing and installing wheel bearing, strut (plus running gear)

Pitch circle diameter: 100 mm

18.2.1 $5^1/_2$ J x 13

Caution

Observe the allocation of wheels and tyres to the respective engines, which are listed in the overview table ⇒ page 220 .

Protected by copyright. Copying for private or commercial purposes, in part or in whole, is not permitted unless authorised by Volkswagen AG. Volkswagen AG does not guarantee or accept any liability with respect to the correctness of information in this document. Copyright by Volkswagen AG.

satelettronica

Vento through 55 kW CL, GL with manual gearbox (front-wheel drive)

191 601 025 D - Wheel and tyre combination ⇒ page 220

Size:	$5^1/_2$ J x 13
Wheel offset in mm:	38
Wheel load in kg:	410
Number of wheel bolt holes:	4

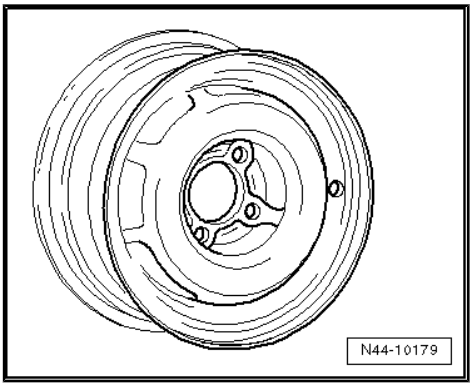

Vento through 66 kW CL, GL with petrol engine, Vento through 55 kW CL, GL with diesel engine, Vento GT

1H0 601 025 A - Wheel and tyre combination ⇒ page 220

Size:	$5^1/_2$ J x 13
Wheel offset in mm:	38
Wheel load in kg:	450
Number of wheel bolt holes:	4

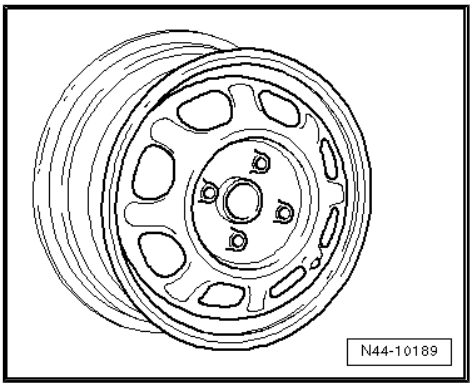

321 601 025 J/M - Wheel and tyre combination ⇒ page 220

Size:	$5^1/_2$ J x 13
Wheel offset in mm:	38
Wheel load in kg:	460
Number of wheel bolt holes:	4

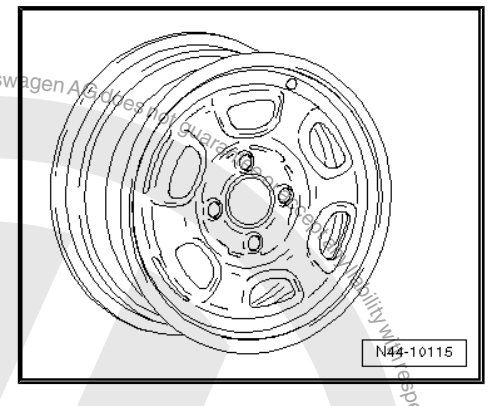

18.2.2 6 J x 14

Caution

Observe the allocation of wheels and tyres to the respective engines, which are listed in the overview table *⇒ page 220* *.*

satelettronica
Protected by copyright. Copying for private or commercial purposes, in part or in whole, is not permitted unless authorised by Volkswagen AG. Volkswagen AG does not guarantee or accept any liability with respect to the correctness of information in this document. Copyright by Volkswagen AG.

Vento through 85 kW CL, GL, Vento 66 kW GT, through 55 kW CL, GL diesel engine, Vento GTD, Vento 66 kW and 81 kW TDI

811 601 025 P - Wheel and tyre combination ⇒ page 220

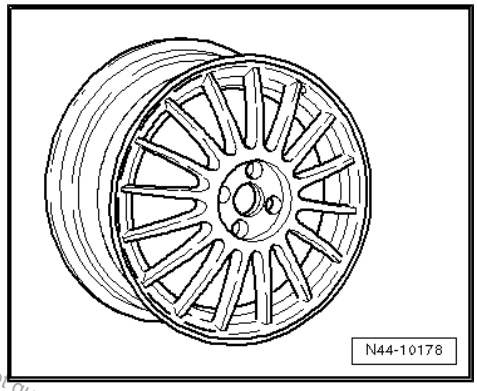

Note

This rim is allowed only for vehicles with a maximum permitted axle load of 880 kg.

Size:	6 J x 14
Wheel offset in mm:	45
Wheel load in kg:	440
Number of wheel bolt holes:	4

1H0 601 025 D - Wheel and tyre combination ⇒ page 220

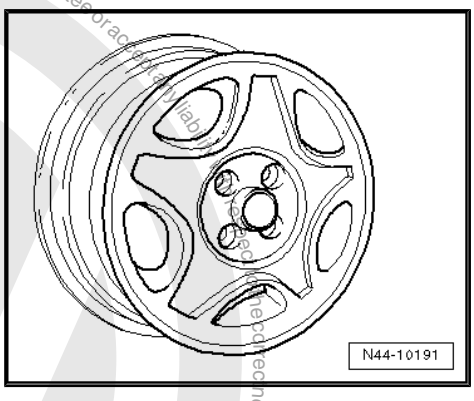

Size:	6 J x 14
Wheel offset in mm:	45
Wheel load in kg:	450
Number of wheel bolt holes:	4

1H0 601 025 AE - Wheel and tyre combination ⇒ page 220

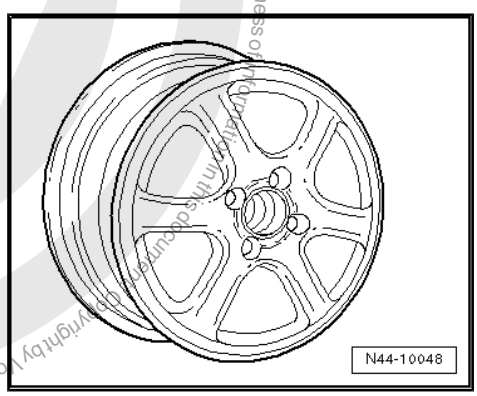

Size:	6 J x 14
Wheel offset in mm:	45
Wheel load in kg:	480
Number of wheel bolt holes:	4

1H0 601 027 - Wheel and tyre combination ⇒ page 220

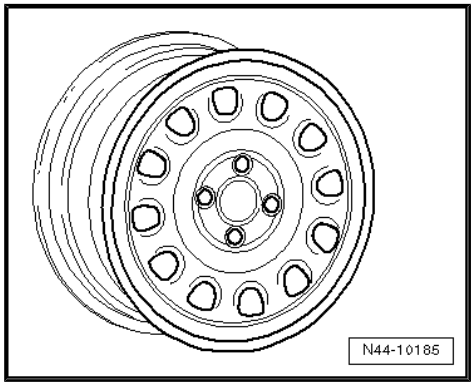

Size:	6 J x 14
Wheel offset in mm:	45
Wheel load in kg:	500
Number of wheel bolt holes:	4

Protected by copyright. Copying for private or commercial purposes, in part or in whole, not permitted unless authorised by Volkswagen AG. Volkswagen AG does not guarantee or accept any liability with respect to the correctness of information in this document. Copyright by Volkswagen AG.
satelettronica

1H0 601 027 A - Wheel and tyre combination ⇒ page 221

Size:	6 J x 14
Wheel offset in mm:	43
Wheel load in kg:	500
Number of wheel bolt holes:	4

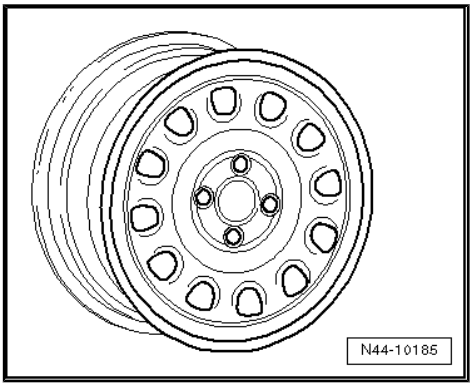

1H0 601 025 P - Wheel and tyre combination ⇒ page 220

Size:	6 J x 14
Wheel offset in mm:	45
Wheel load in kg:	460
Number of wheel bolt holes:	4

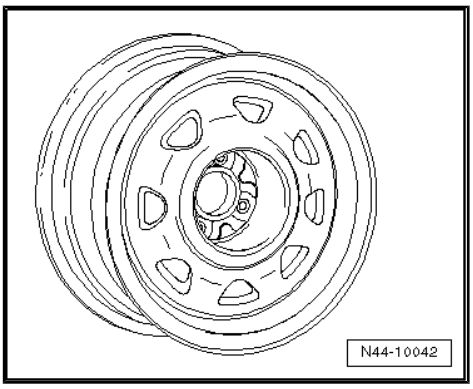

1HM 601 025 - Wheel and tyre combination ⇒ page 220

Size:	6 J x 14
Wheel offset in mm:	45
Wheel load in kg:	460
Number of wheel bolt holes:	4

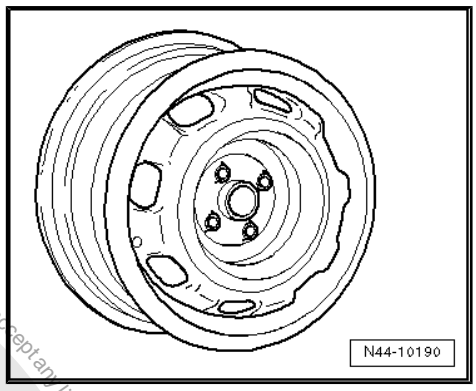

1H0 601 025 B - Wheel and tyre combination ⇒ page 220

Size:	6 J x 14
Wheel offset in mm:	45
Wheel load in kg:	460
Number of wheel bolt holes:	4

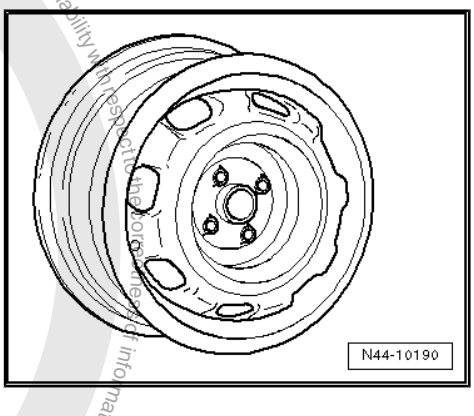

Protected by copyright. Copying for private or commercial purposes, in part or whole, is not permitted unless authorised by Volkswagen AG. Volkswagen AG does not guarantee or accept any liability with respect to the correctness of information in this document. Copyright by Volkswagen AG.
satelettronica

1H0 601 025 R - Wheel and tyre combination ⇒ page 220

Size:	6 J x 14
Wheel offset in mm:	45
Wheel load in kg:	500
Number of wheel bolt holes:	4

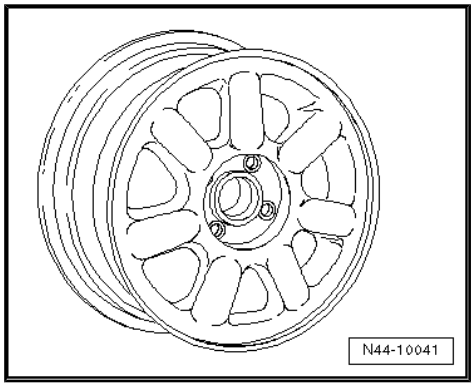

18.2.3 6 J x 15

Caution

Observe the allocation of wheels and tyres to the respective engines, which are listed in the overview table ⇒ page 220 *.*

Vento through 85 kW CL, GL, Vento 66 kW GT, through 55 kW CL, GL diesel engine, Vento GTD, Vento 66 kW and 81 kW TDI

1H0 601 025 E - Wheel and tyre combination ⇒ page 221

Size:	6 J x 15
Wheel offset in mm:	45
Wheel load in kg:	450
Number of wheel bolt holes:	4

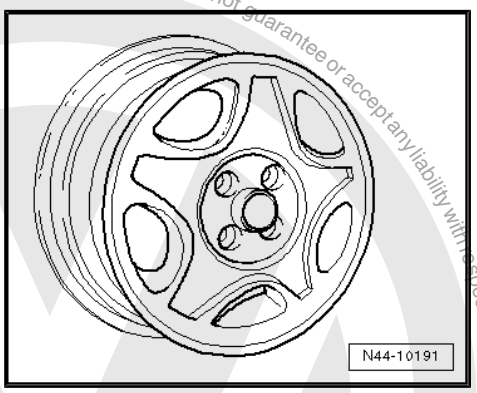

1H0 601 025 L - Wheel and tyre combination ⇒ page 221

Size:	6 J x 15
Wheel offset in mm:	45
Wheel load in kg:	450
Number of wheel bolt holes:	4

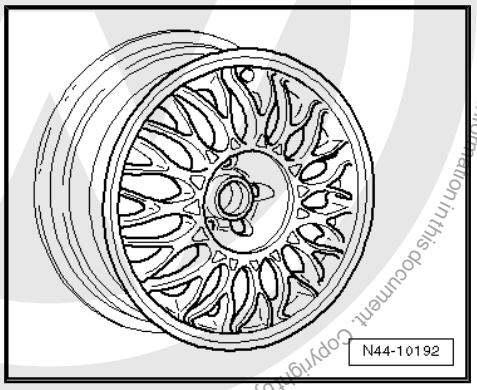

Protected by copyright. Copying for private or commercial purposes, in part or in whole, is not permitted unless authorised by Volkswagen AG. Volkswagen AG does not guarantee or accept any liability with respect to the correctness of information in this document. Copyright by Volkswagen AG.
satelettronica

1H0 601 025 Q - Wheel and tyre combination ⇒ page 221

Size:	6 J x 15
Wheel offset in mm:	45
Wheel load in kg:	450
Number of wheel bolt holes:	4

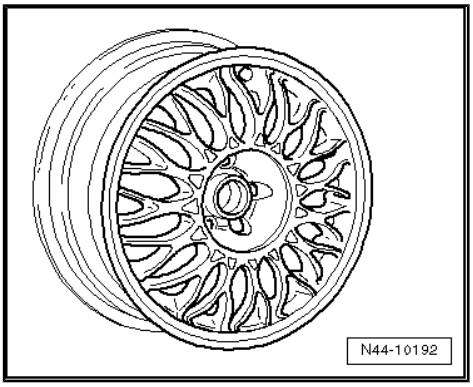

1H0 601 025 AD - Wheel and tyre combination ⇒ page 221

Size:	6 J x 15
Wheel offset in mm:	45
Wheel load in kg:	460
Number of wheel bolt holes:	4

Vento VR6 through 12.94

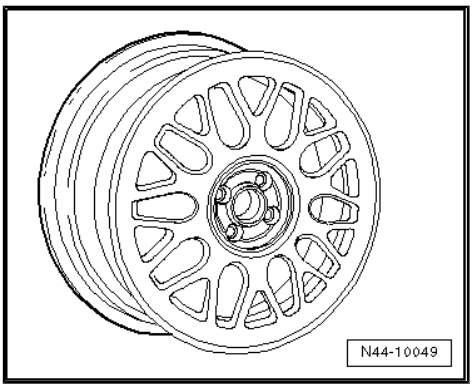

1H0 601 025 K - Wheel and tyre combination ⇒ page 222

Size:	6 J x 15
Wheel offset in mm:	38
Wheel load in kg:	490
Number of wheel bolt holes:	5

Vento 85 kW GT through 04.96

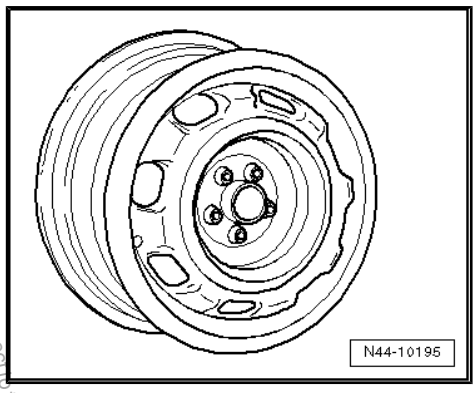

1H0 601 025 J - Wheel and tyre combination ⇒ page 222

Size:	6 J x 15
Wheel offset in mm:	38
Wheel load in kg:	530
Number of wheel bolt holes:	5

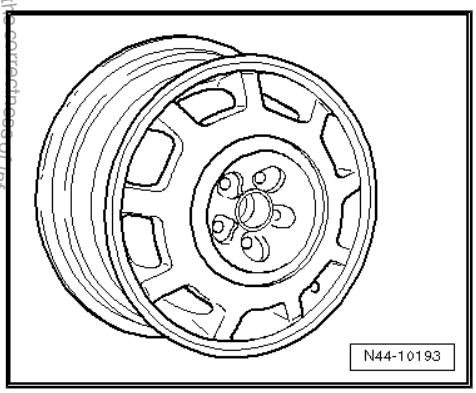

Protected by copyright. Copying for private or commercial purposes, in part or in whole, is not permitted unless authorised by Volkswagen AG. Volkswagen AG does not guarantee or accept any liability with respect to the correctness of information in this document. Copyright by Volkswagen AG.

satelettronica

1H0 601 025 K - Wheel and tyre combination ⇒ page 222

Size:	6 J x 15
Wheel offset in mm:	38
Wheel load in kg:	490
Number of wheel bolt holes:	5

Vento 85 kW GT, Vento VR6

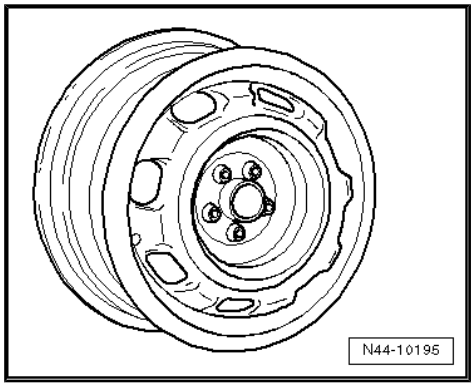

3A0 601 027 - Wheel and tyre combination ⇒ page 222

Size:	6 J x 15
Wheel offset in mm:	35
Wheel load in kg:	530
Number of wheel bolt holes:	5

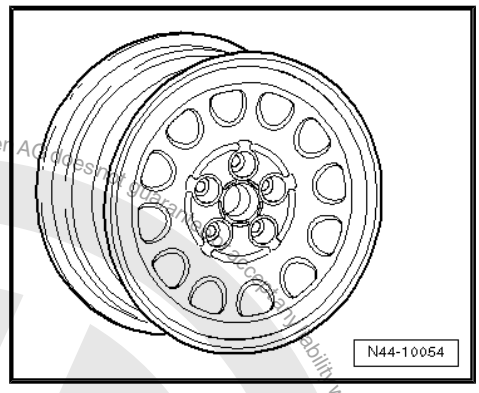

18.2.4 6$^1/_2$ J x 15

Caution

Observe the allocation of wheels and tyres to the respective engines, which are listed in the overview table ⇒ page 220 *.*

Vento VR6 through 12.94

1H0 601 025 F - Wheel and tyre combination ⇒ page 222

Size:	6$^1/_2$ J x 15
Wheel offset in mm:	43
Wheel load in kg:	490
Number of wheel bolt holes:	5

Vento 85 kW GT through 04.96

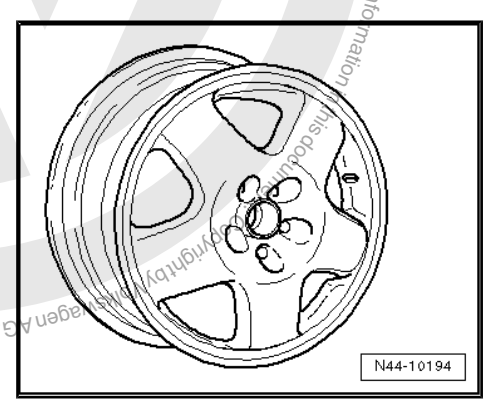

Protected by copyright. Copying for private or commercial purposes, in part or in whole, is not permitted unless authorised by Volkswagen AG. Volkswagen AG does not guarantee or accept any liability with respect to the correctness of information in this document. Copyright by Volkswagen AG.
satelettronica

1H0 601 025 F - Wheel and tyre combination ⇒ page 221

Size:	$6^1/_2$ J x 15
Wheel offset in mm:	43
Wheel load in kg:	490
Number of wheel bolt holes:	5

Vento 85 kW GT, Vento VR6

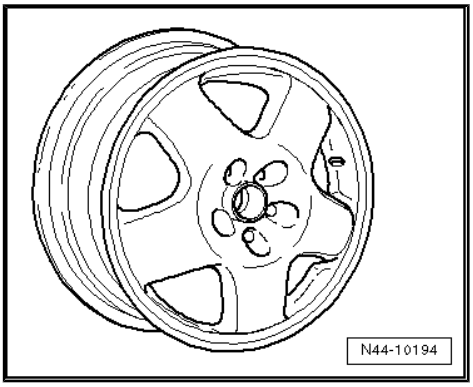

1H0 601 025 AA - Wheel and tyre combination ⇒ page 221

Size:	$6^1/_2$ J x 15
Wheel offset in mm:	43
Wheel load in kg:	500
Number of wheel bolt holes:	5

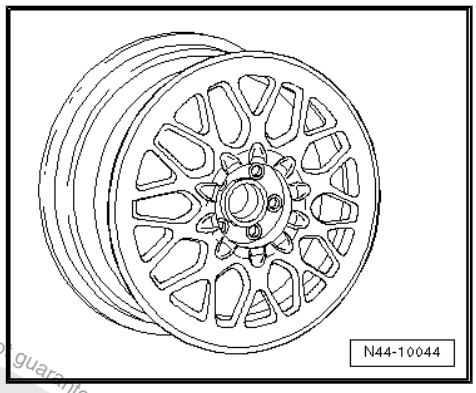

1H0 601 025 S- Wheel and tyre combination ⇒ page 221

Size:	$6^1/_2$ J x 15
Wheel offset in mm:	43
Wheel load in kg:	490
Number of wheel bolt holes:	5

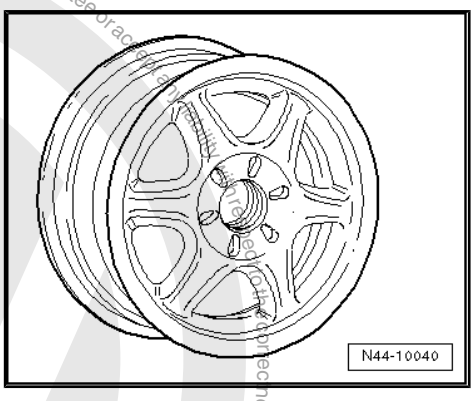

1H0 601 025 AB - Wheel and tyre combination ⇒ page 221

Size:	$6^1/_2$ J x 15
Wheel offset in mm:	43
Wheel load in kg:	510
Number of wheel bolt holes:	5

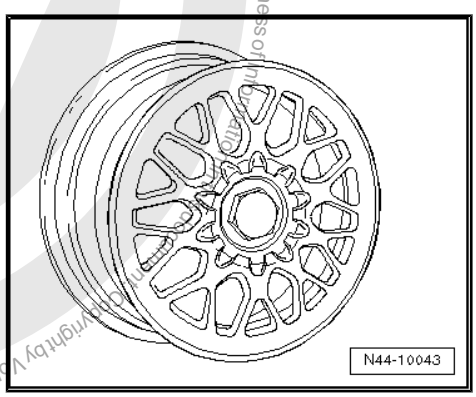

Protected by copyright. Copying for private or commercial purposes, in part or in whole, is not permitted unless authorised by Volkswagen AG. Volkswagen AG does not guarantee or accept any liability with respect to the correctness of information. Copyright by Volkswagen AG.
satelettronica

1H0 601 025 T - Wheel and tyre combination ⇒ page 221

Size:	$6^1/_2$ J x 15
Wheel offset in mm:	43
Wheel load in kg:	490
Number of wheel bolt holes:	5

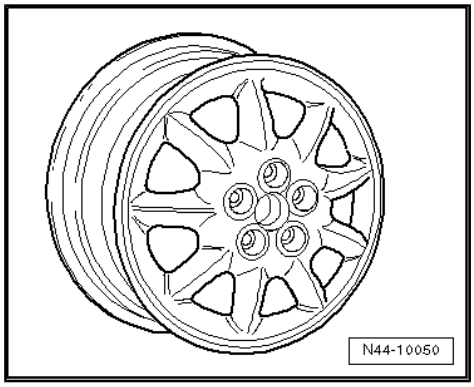

1H0 601 025 AF - Wheel and tyre combination ⇒ page 221

Size:	$6^1/_2$ J x 15
Wheel offset in mm:	43
Wheel load in kg:	490
Number of wheel bolt holes:	5

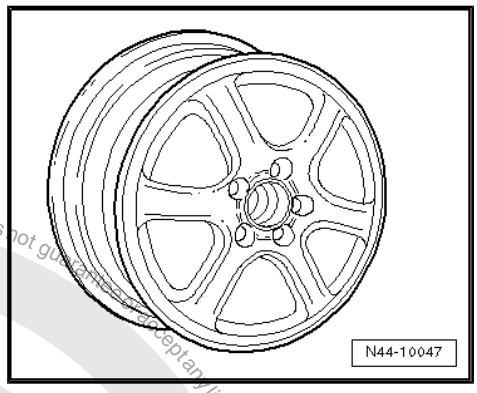

1H0 601 025 AG - Wheel and tyre combination ⇒ page 221

Size:	$6^1/_2$ J x 15
Wheel offset in mm:	43
Wheel load in kg:	500
Number of wheel bolt holes:	5

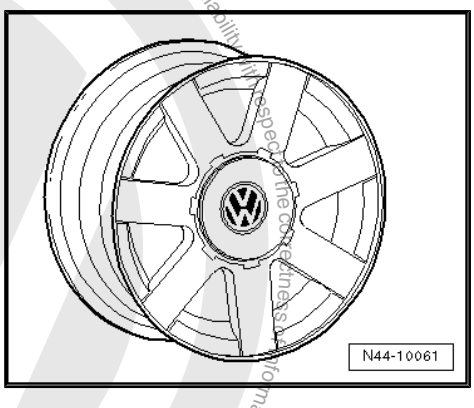

1H0 601 025 M - Wheel and tyre combination ⇒ page 221

Size:	$6^1/_2$ J x 15
Wheel offset in mm:	43
Wheel load in kg:	490
Number of wheel bolt holes:	5

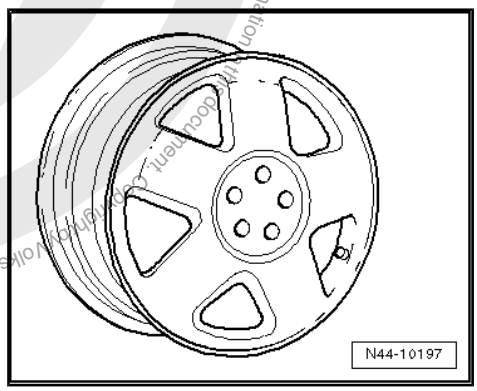

Protected by copyright. Copying for private or commercial purposes, in part or in whole, is not permitted unless authorised by Volkswagen AG. Volkswagen AG does not guarantee or accept any liability with respect to the correctness of information in this document. Copyright by Volkswagen AG.
satelettronica

535 601 025 D - Wheel and tyre combination ⇒ page 221

Size:	$6^1/_2$ J x 15
Wheel offset in mm:	43
Wheel load in kg:	510
Number of wheel bolt holes:	5

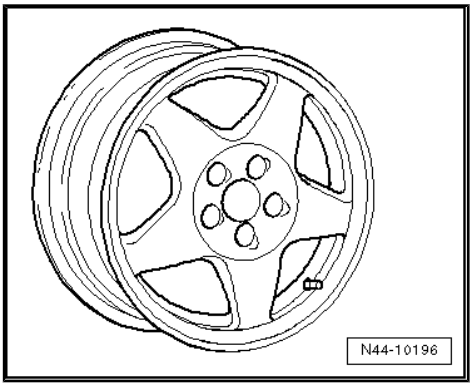

1H0 601 025 G - Wheel and tyre combination ⇒ page 221

Size:	$6^1/_2$ J x 15
Wheel offset in mm:	43
Wheel load in kg:	490
Number of wheel bolt holes:	5

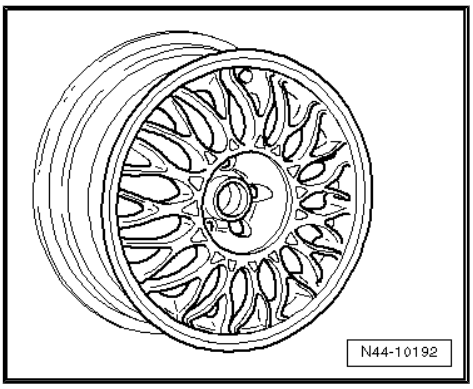

1H0 601 025 N - Wheel and tyre combination ⇒ page 221

Size:	$6^1/_2$ J x 15
Wheel offset in mm:	43
Wheel load in kg:	490
Number of wheel bolt holes:	5

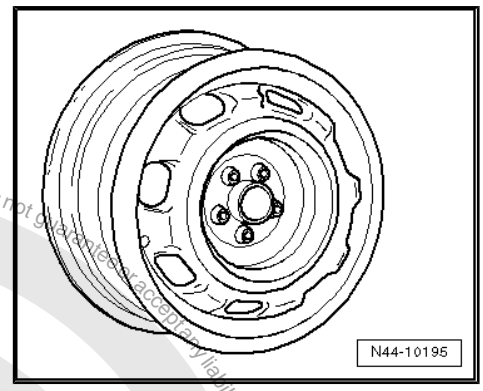

Protected by copyright. Copying for private or commercial purposes, in part or in whole, is not permitted unless authorised by Volkswagen AG. Volkswagen AG does not give any warranty or accept any liability with respect to the correctness of information in this document. Copyright by Volkswagen AG.
satelettronica

19 Bora from model year 1999 through model year 2005

General

Volkswagen vehicles are built according to the latest findings in safety engineering. To keep it that way, we recommend the use of genuine Volkswagen spare parts only. You can recognise this by the VW Audi logo and by the part number. It has been established that these parts are reliable, safe and suitable.

Despite constant appraisal of the market, we cannot assess other products on these points, even when in isolated cases they have been passed by official inspectors or have been granted official approval. Therefore, we cannot, of course, assume any liability if these products are installed.

> ⚠ **WARNING**
>
> *The products from Volkswagen genuine parts and Votex genuine accessories may differ in fitting requirements, torque specifications and so on.*
>
> *Always follow the respective fitting and operating instructions.*

The wheel and tyre combinations or changes listed in the vehicle tables refer exclusively to Volkswagen Genuine wheels. Approval of wheel and tyre combinations or a change to wheels from the accessories trade is not possible with the parts certificate attached here.

> ⚠ **WARNING**
>
> *The fitting instructions and torque specifications for wheels from Votex genuine accessories may differ from those intended for wheels from Volkswagen genuine parts.*
>
> *Therefore, always observe the torque settings for the wheel bolts as well as the respective fitting and operating instructions.*

19.1 Bora, Bora 4Motion, type 1J from model year 1999 through model year 2005

Appendix 2 to Parts Certificate 1958/04

Type Approval No.: e1*96/79*0071*05 through e1*96/79*0071*09

Type Approval No.: e1*98/14*0071*10 to e1*98/14*0071*30

Type Approval No.: e1*2001/116*0071*31 through e1*2001/116*0071*36

Overview

Model engine output	Tyres	Tyre size	Wheel	Off-set in mm	Snow chains	Remarks
1.4l 55 kW petrol engine; 1.9l 50 kW diesel engine	Standard tyres	195/65 R 15 91T	6 J x 15 ⇒ page 235	38	Yes	General notes on winter tyres
	Modification	205/55 R 16 91H	$6^1/_2$ J x 16 ⇒ page 238	42	No	Tyre makes recommended by Volkswagen:

Protected by copyright. Copying for private or commercial purposes, in part or in whole, is not permitted unless authorised by Volkswagen AG. Volkswagen AG does not guarantee or accept any liability with respect to the correctness of information in this document.
satelettronica

Model engine output	Tyres	Tyre size	Wheel	Off-set in mm	Snow chains	Remarks
		225/45 R 17 91W	7 J x 17 ⇒ page 243	38	No	◆ Summer tyres ⇒ page 368 ◆ All-season tyres ⇒ page 381 ◆ Winter tyres ⇒ page 390
	Winter tyres	195/65 R 15 91Q/T	6 J x 15 ⇒ page 235	38	Yes	
		205/55 R 16 91T/H	$5^1/_2$ J x 16 ⇒ page 237	36	Yes	
1.9l 66 kW TDI	Standard tyres	195/65 R 15 91T	6 J x 15 ⇒ page 235	38	Yes	The 225/45 R 17 tyre may be mounted on the 7 J x 17 or the $7^1/_2$ J x 17 rim only if the listed conditions ⇒ page 245 are fulfilled!
	Modification	205/55 R 16 91H	$6^1/_2$ J x 16 ⇒ page 238	42	No	
		225/45 R 17 91W	7 J x 17 ⇒ page 243	38	No	
		225/45 R 17 91W	$7^1/_2$ J x 17 ⇒ page 245	38	No	
	Winter tyres	195/65 R 15 91Q/T	6 J x 15 ⇒ page 235	38	Yes	
		205/55 R 16 91T/H	$5^1/_2$ J x 16 ⇒ page 237	36	Yes	
1.6l 74 kW, 75 kW, 77 kW, 81 kW, 2.0l 85 kW petrol engine; 1.9l 74 kW, 81 kW, 85 kW TDI	Standard tyres	195/65 R 15 91H	6 J x 15 ⇒ page 235	38	Yes	The adhesive weights for balancing must be attached to the inner side of the rim of $6^1/_2$ J x 16 aluminium wheels!
	Modification	205/55 R 16 91H	$6^1/_2$ J x 16 ⇒ page 238	42	No	4Motion vehicles: Snow chains are permitted on the front wheels only.
		225/45 R 17 91W	7 J x 17 ⇒ page 243	38	No	
		225/45 R 17 91W	$7^1/_2$ J x 17 ⇒ page 245	38	No	
	Winter tyres	195/65 R 15 91Q/T	6 J x 15 ⇒ page 235	38	Yes	

Protected by copyright. Copyright by Volkswagen AG. Copyright by Volkswagen AG. Volkswagen AG does not guarantee or accept any liability with respect to the correctness of information in this document. Copyright by Volkswagen AG. Reproduction for private or commercial purposes, in part or in whole, is not permitted unless authorised by Volkswagen AG.

satelettronica

Model engine output	Tyres	Tyre size	Wheel	Off-set in mm	Snow chains	Remarks
		205/55 R 16 91T/H	$5^1/_2$ J x 16 ⇒ page 237	36	Yes	
1.8l 92 kW; 1.8l 110 kW; 2.3l 110 kW petrol engines; 1.9l 96 kW TDI; 1.9l 110 kW TDI	Standard tyres	195/65 R15 91V	6 J x 15 ⇒ page 235	38	Yes	
	Modification	205/55 R 16 91V	$6^1/_2$ J x 16 ⇒ page 238	42	No	
		225/45 R 17 91W	7 J x 17 ⇒ page 243	38	No	
		225/45 R 17 91W	$7^1/_2$ J x 17 ⇒ page 245	38	No	
	Winter tyres	195/65 R 15 91Q/T	6 J x 15 ⇒ page 235	38	Yes	
		205/55 R 16 91T/H	$5^1/_2$ J x 16 ⇒ page 237	36	Yes	
1.8l 132 kW; 2.3l 125 kW	Standard tyres	205/55 R 16 91W	$6^1/_2$ J x 16 ⇒ page 241	42	No	
	Modification	205/55 R 16 91V	$6^1/_2$ J x 16 ⇒ page 241	42	No	
		225/45 R 17 91W	7 J x 17 ⇒ page 243	38	No	
		225/45 R 17 91W	$7^1/_2$ J x 17 ⇒ page 245	38	No	
	Winter tyres	205/55 R 16 91T/H	$5^1/_2$ J x 16 ⇒ page 237	36	Yes	
2.8l 150 kW	Standard tyres	205/55 R 16 91W	$6^1/_2$ J x 16 ⇒ page 241	42	No	
	Modification	225/45 R 17 91W	7 J x 17 ⇒ page 243	38	No	
		225/45 R 17 91W	$7^1/_2$ J x 17 ⇒ page 245	38	No	
	Winter tyres	205/55 R 16 91T/H	$5^1/_2$ J x 16 ⇒ page 237	36	Yes	

Tyre pressures can be found on the inside of the fuel tank flap or in ⇒ Maintenance ; Booklet 37 .

Copyright by Volkswagen AG. Volkswagen AG does not guarantee or accept any liability with respect to the correctness of information in this document. Copyright by Volkswagen AG. Protected by copyright. Copying for private or commercial purposes, in part or in whole, is not permitted unless authorised by Volkswagen AG.

satelettronica

19.2 Wheel allocation for Bora, Bora 4Motion, type 1J from model year 1999 through model year 2005

Explanation of information on wheels

Wheel bolt torque settings ⇒ Running gear, axles, steering - front and four-wheel drive; Rep. gr. 44 ; Wheel bolt torque settings

Pitch circle diameter	100 mm
Number of wheel bolt holes:	5

19.2.1 6 J x 15

Caution

Observe the allocation of wheels and tyres to the respective engines, which are listed in the overview table ⇒ page 232 .

For vehicles with maximum permitted axle load of 1,000 kg

1J0 601 025 N, 1J0 601 025 AG - Wheel and tyre combination ⇒ page 232

Size:	6 J x 15
Wheel offset in mm:	38
Wheel load in kg:	500

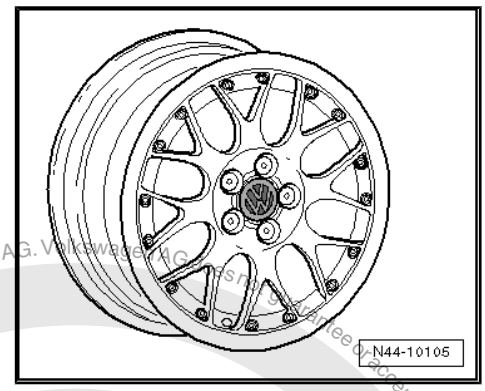

1J0 601 025 B, 1J0 601 025 AA - Wheel and tyre combination ⇒ page 232

Size:	6 J x 15
Wheel offset in mm:	38
Wheel load in kg:	500

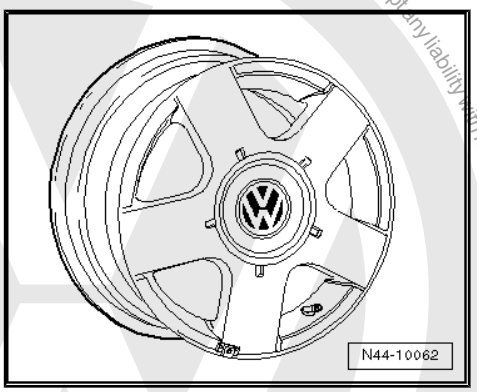

For vehicles through 96 kW and petrol engines to 110 kW

1J0 601 027 - Wheel and tyre combination ⇒ page 232

Size:	6 J x 15
Wheel offset in mm:	38
Wheel load in kg:	550

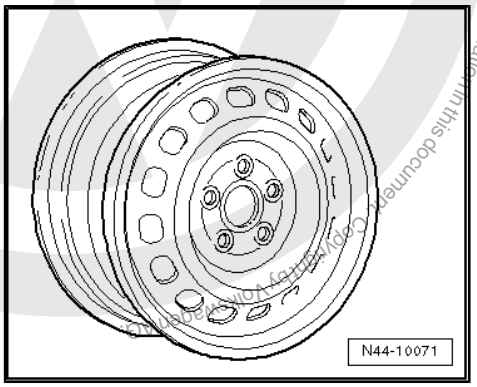

Protected by copyright. Copying for private or commercial purposes, in part or in whole, is not permitted unless authorised by Volkswagen AG. Volkswagen AG does not guarantee or accept any liability with respect to the correctness of information in this document. Copyright by Volkswagen AG.
satelettronica

1J0 601 027 H, 1J0 601 027 Q - Wheel and tyre combination
⇒ page 232

Size:	6 J x 15
Wheel offset in mm:	38
Wheel load in kg:	550

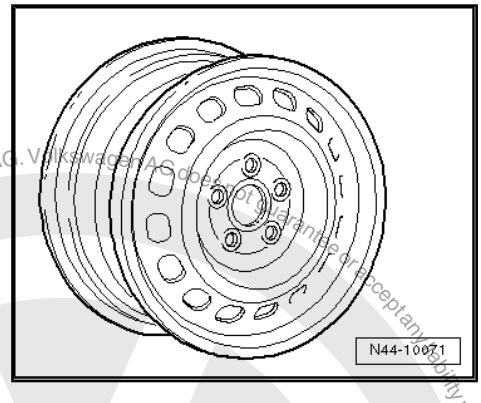

1J0 601 025 Q - Wheel and tyre combination ⇒ page 232

Size:	6 J x 15
Wheel offset in mm:	38
Wheel load in kg:	530

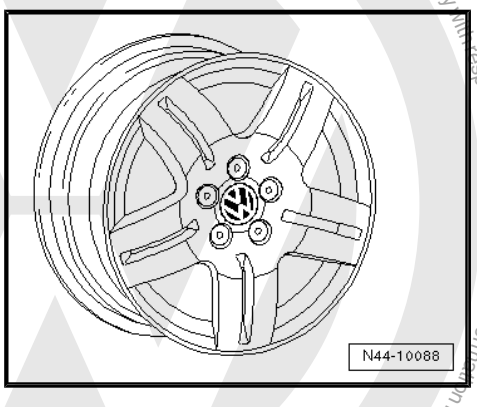

1J0 601 025 AK - Wheel and tyre combination ⇒ page 232

Size:	6 J x 15
Wheel offset in mm:	38
Wheel load in kg:	580

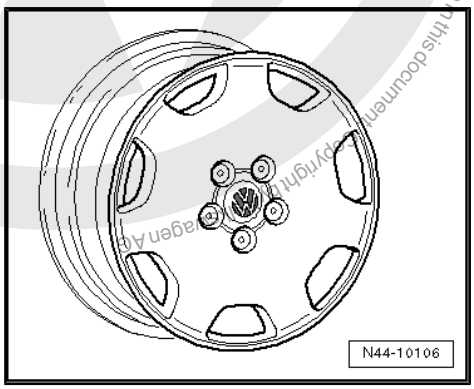

1C0 601 025 F - Wheel and tyre combination ⇒ page 232

Size:	6 J x 15
Wheel offset in mm:	38
Wheel load in kg:	550

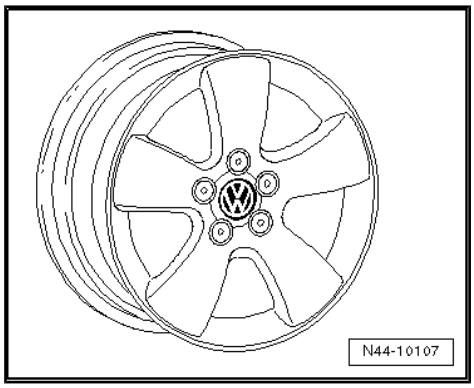

Protected by copyright. Copying for private or commercial purposes, in part or in whole, is not permitted unless authorised by Volkswagen AG. Volkswagen AG does not guarantee or accept any liability with respect to the correctness of information in this document.
satelettronica

1J0 601 025 BD - Wheel and tyre combination ⇒ page 232

Size:	6 J x 15
Wheel offset in mm:	38
Wheel load in kg:	580

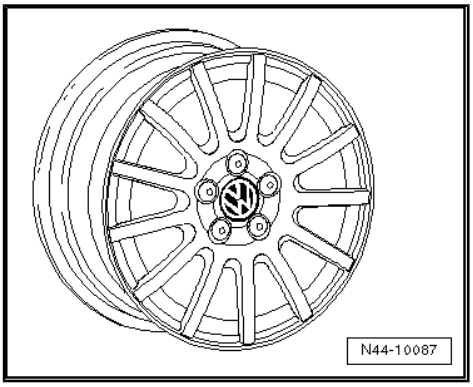

1J0 601 025 P, 1J0 601 025 AL - Wheel and tyre combination
⇒ page 232

Size:	6 J x 15
Wheel offset in mm:	38
Wheel load in kg:	550

For vehicles with 110 kW TDI and petrol engines 1.8l 132 kW, 2.3l 125 kW, 2.8l 150 kW

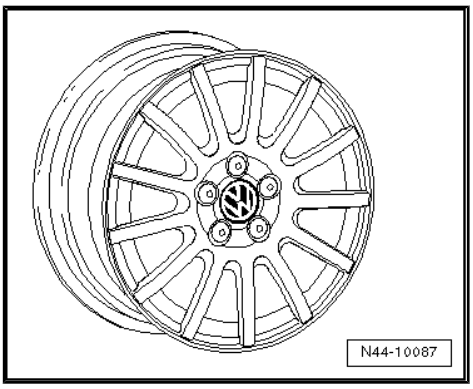

1J0 601 025 BD - Wheel and tyre combination ⇒ page 234

Size:	6 J x 15
Wheel offset in mm:	38
Wheel load in kg:	580

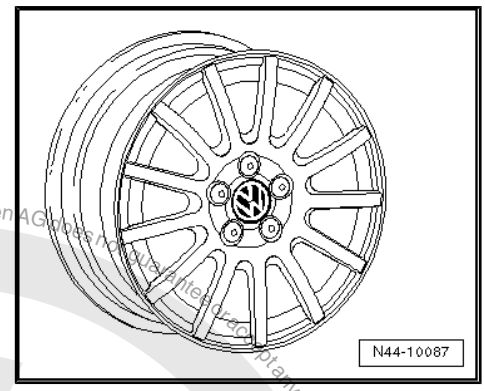

1J0 601 025 P, 1J0 601 025 AL - Wheel and tyre combination
⇒ page 234

Size:	6 J x 15
Wheel offset in mm:	38
Wheel load in kg:	550

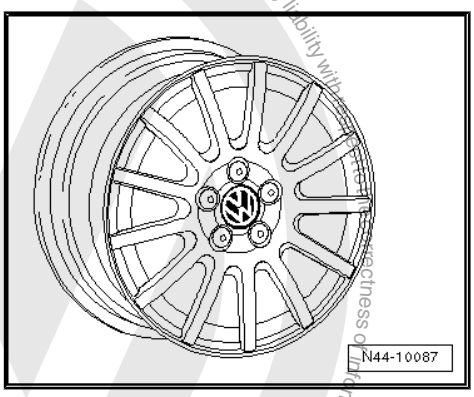

19.2.2 5¹/₂ J x 16

Caution

Observe the allocation of wheels and tyres to the respective engines, which are listed in the overview table ⇒ page 232 *.*

Protected by copyright. Copying for private or commercial purposes, in part or in whole, is not permitted unless authorised by Volkswagen AG. Volkswagen AG does not guarantee or accept any liability with respect to the correctness of information in this document. Copyright by Volkswagen AG.
satelettronica

For vehicles through 96 kW and petrol engines to 110 kW

For vehicles with 110 kW TDI and petrol engines 1.8l 132 kW, 2.3l 125 kW, 2.8l 150 kW

Snow tyres

1J0 601 025 M, 1J0 601 025 AF - Wheel and tyre combination ⇒ page 233

Size:	$5^1/_2$ J x 16
Wheel offset in mm:	36
Wheel load in kg:	550

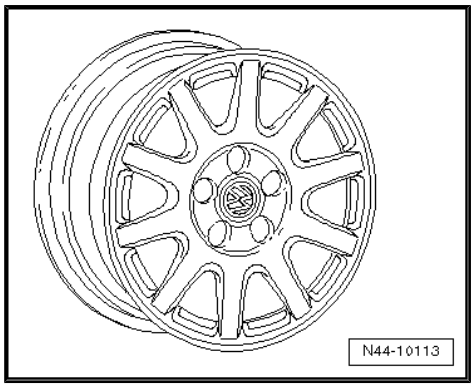

1J0 601 025 AP - Wheel and tyre combination ⇒ page 233

Size:	$5^1/_2$ J x 16
Wheel offset in mm:	36
Wheel load in kg:	550

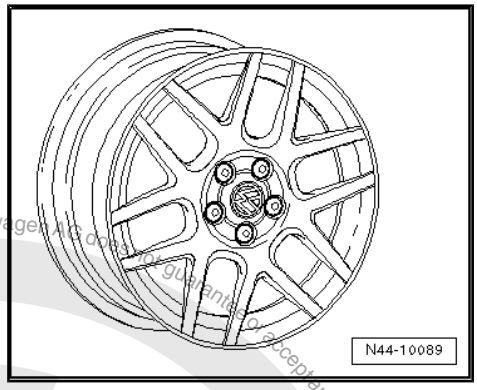

19.2.3 $6^1/_2$ J x 16

> **Caution**
>
> *Observe the allocation of wheels and tyres to the respective engines, which are listed in the overview table* ⇒ page 232 *.*

For vehicles with maximum permitted axle load of 1,000 kg

1C0 601 025 A, 1C0 601 025 D - Wheel and tyre combination ⇒ page 232

Size:	$6^1/_2$ J x 16
Wheel offset in mm:	42
Wheel load in kg:	500

For vehicles through 96 kW and petrol engines to 110 kW

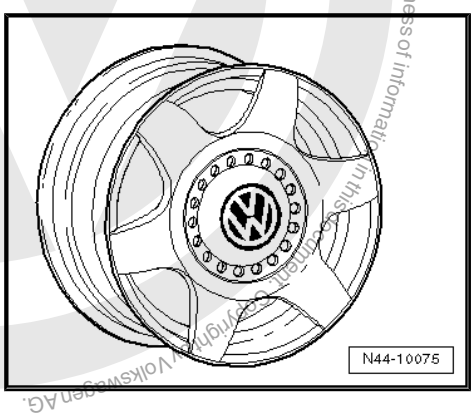

Protected by copyright. Copying for private or commercial purposes, in part or whole, is not permitted unless authorised by Volkswagen AG. Volkswagen AG does not guarantee or accept any liability with respect to the correctness of information in this document. Copyright by Volkswagen AG.

satelettronica

1J0 601 027 L, 1J0 601 027 R - Wheel and tyre combination
⇒ page 232

Size:	$6^1/_2$ J x 16
Wheel offset in mm:	42
Wheel load in kg:	550

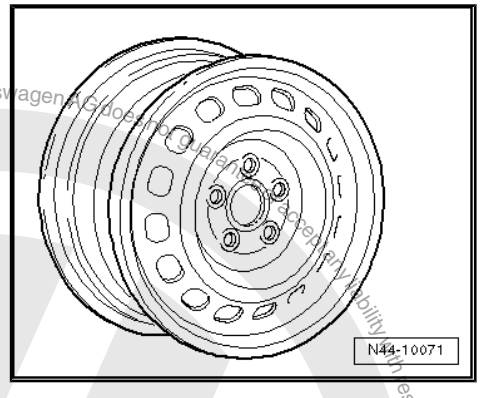

1J0 601 025 F, 1J0 601 025 AC - Wheel and tyre combination
⇒ page 232

Size:	$6^1/_2$ J x 16
Wheel offset in mm:	42
Wheel load in kg:	530

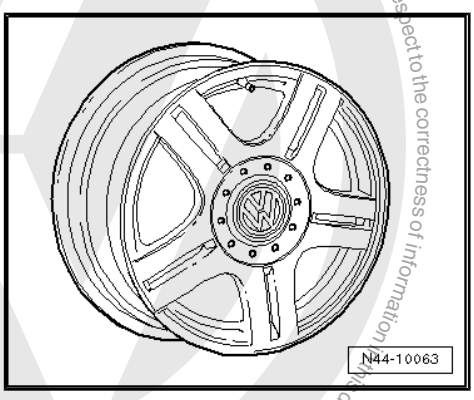

1J0 601 025 E, 1J0 601 025 AD - Wheel and tyre combination
⇒ page 232

Size:	$6^1/_2$ J x 16
Wheel offset in mm:	42
Wheel load in kg:	530

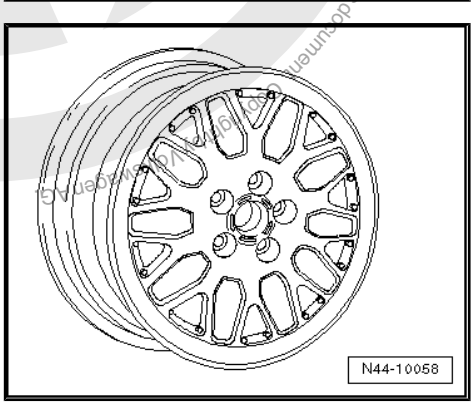

1J0 601 025 H, 1J0 601 025 AH - Wheel and tyre combination
⇒ page 232

Size:	$6^1/_2$ J x 16
Wheel offset in mm:	42
Wheel load in kg:	530

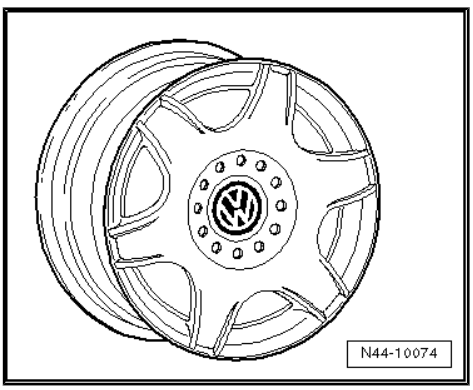

Protected by copyright. Copying for private or commercial purposes, in part or in whole, is not permitted unless authorised by Volkswagen AG. Volkswagen AG does not guarantee or accept any liability with respect to the correctness of information in this document. Copyright by Volkswagen AG.

satelettronica

Protected by copyright. Copyright by Volkswagen AG. Volkswagen AG does not guarantee or accept any liability with respect to the correctness of information in this document. Copyright by Volkswagen AG. Copying for private or commercial purposes, in part or in whole, is not permitted unless authorised by Volkswagen AG.

1J0 601 025 L, 1J0 601 025 AE - Wheel and tyre combination
⇒ page 232

Size:	$6^1/_2$ J x 16
Wheel offset in mm:	42
Wheel load in kg:	550

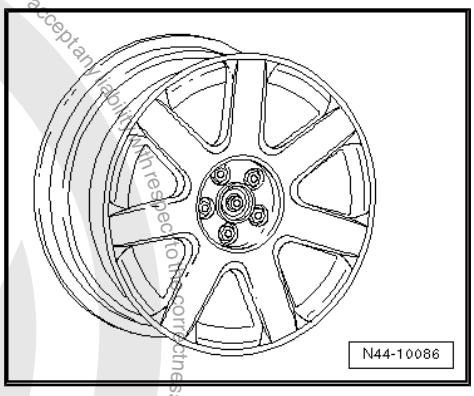

1C0 601 025 G - Wheel and tyre combination ⇒ page 232

Size:	$6^1/_2$ J x 16
Wheel offset in mm:	42
Wheel load in kg:	550

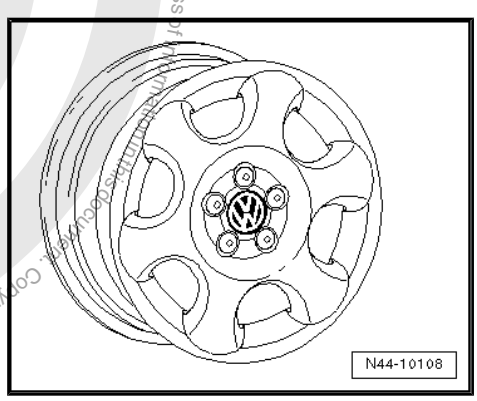

1C0 601 025 H - Wheel and tyre combination ⇒ page 232

Size:	$6^1/_2$ J x 16
Wheel offset in mm:	42
Wheel load in kg:	550

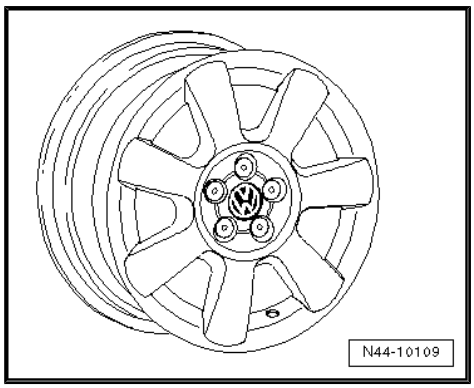

1J0 601 025 R, 1J0 601 025 AN - Wheel and tyre combination
⇒ page 232

Size:	$6^1/_2$ J x 16
Wheel offset in mm:	42
Wheel load in kg:	550

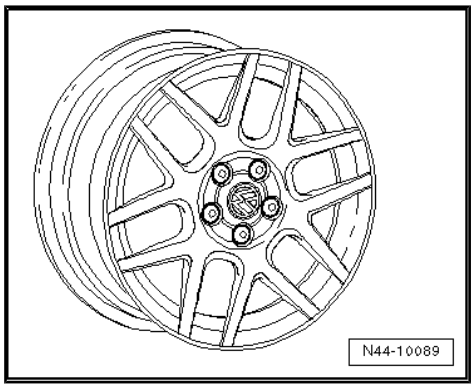

satelettronica

1J0 601 025 T, 1J0 601 025 AJ - Wheel and tyre combination
⇒ page 232

Size:	$6^1/_2$ J x 16
Wheel offset in mm:	42
Wheel load in kg:	550

For vehicles with 110 kW TDI and petrol engines 1.8l 132 kW, 2.3l 125 kW, 2.8l 150 kW

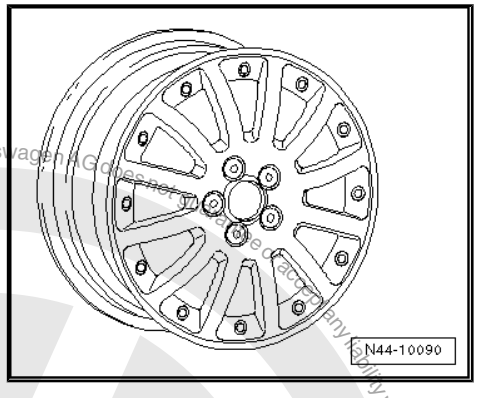

1J0 601 027 L, 1J0 601 027 R - Wheel and tyre combination
⇒ page 234

Size:	$6^1/_2$ J x 16
Wheel offset in mm:	42
Wheel load in kg:	550

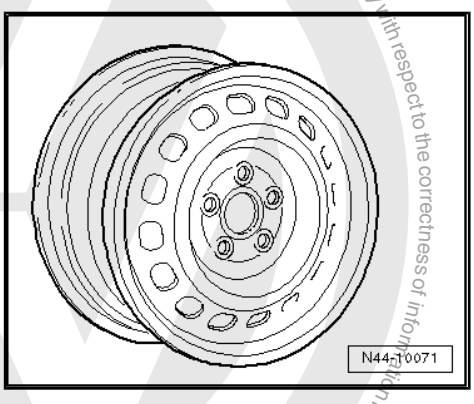

1J0 601 025 F, 1J0 601 025 AC - Wheel and tyre combination
⇒ page 234

Size:	$6^1/_2$ J x 16
Wheel offset in mm:	42
Wheel load in kg:	530

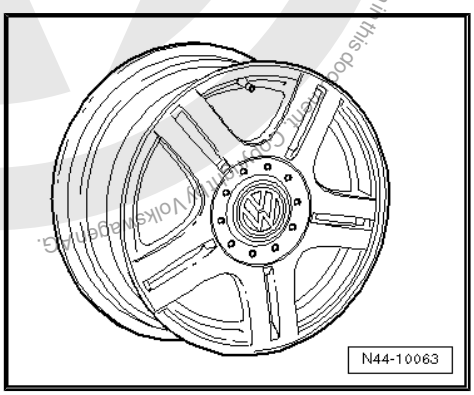

1J0 601 025 L, 1J0 601 025 AE - Wheel and tyre combination
⇒ page 234

Size:	$6^1/_2$ J x 16
Wheel offset in mm:	42
Wheel load in kg:	550

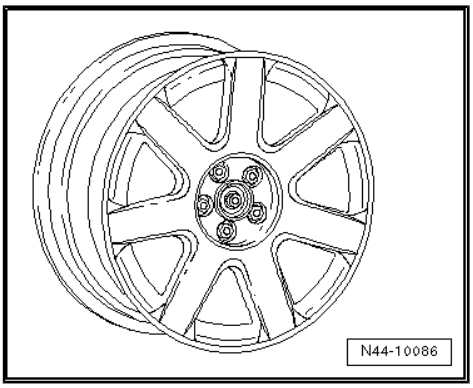

Protected by copyright. Copying for private or commercial purposes, in part or in whole, is not permitted unless authorised by Volkswagen AG. Volkswagen AG does not guarantee or accept any liability with respect to the correctness of information in this document. Copyright by Volkswagen AG.
satelettronica

Protected by copyright. Copyright by Volkswagen AG. Volkswagen AG does not guarantee or accept any liability with respect to the correctness of information in this document. Copyright by Volkswagen AG.

1J0 601 025 AN, 1J0 601 025 R - Wheel and tyre combination
⇒ page 234

Size:	$6^1/_2$ J x 16
Wheel offset in mm:	42
Wheel load in kg:	550

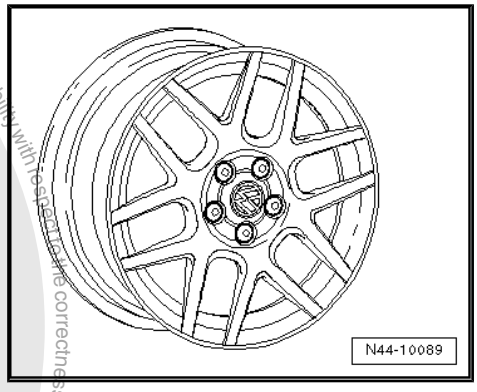

1J0 601 025 T, 1J0 601 025 AJ - Wheel and tyre combination
⇒ page 234

Size:	$6^1/_2$ J x 16
Wheel offset in mm:	42
Wheel load in kg:	550

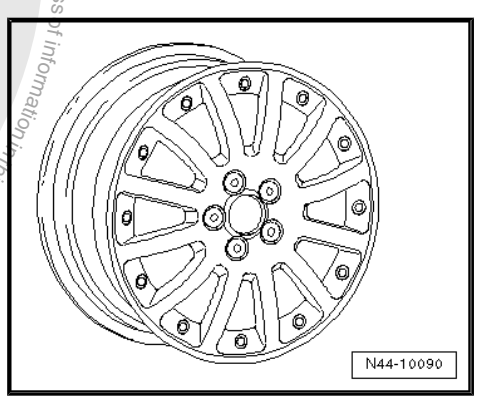

1C0 601 025 G - Wheel and tyre combination ⇒ page 234

Size:	$6^1/_2$ J x 16
Wheel offset in mm:	42
Wheel load in kg:	550

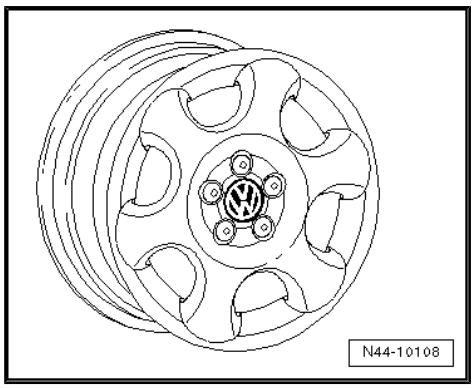

1C0 601 025 H - Wheel and tyre combination ⇒ page 234

Size:	$6^1/_2$ J x 16
Wheel offset in mm:	42
Wheel load in kg:	550

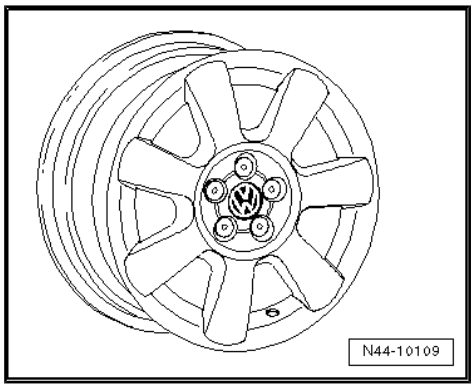

satelettronica

19.2.4 7 J x 17

The following wheels are permitted only if the stated conditions ⇒ page 245 are fulfilled.

> ⚠ **Caution**
>
> *Observe the allocation of wheels and tyres to the respective engines, which are listed in the overview table ⇒ page 232 .*

1J0 601 025 J, 1J0 601 025 S - Wheel and tyre combination ⇒ page 233

Size:	7 J x 17
Wheel offset in mm:	38
Wheel load in kg:	580

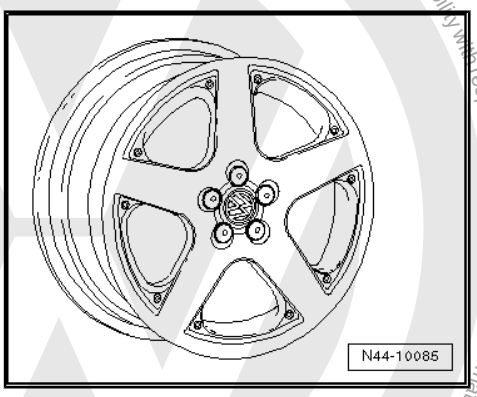

1J0 601 025 AB - Wheel and tyre combination ⇒ page 233

Size:	7 J x 17
Wheel offset in mm:	38
Wheel load in kg:	550

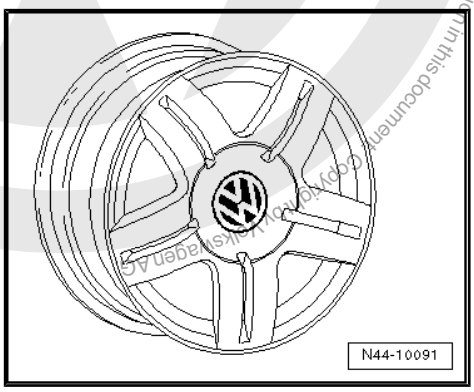

1C0 601 025 B, 1C0 601 025 E - Wheel and tyre combination ⇒ page 233

Size:	7 J x 17
Wheel offset in mm:	38
Wheel load in kg:	550

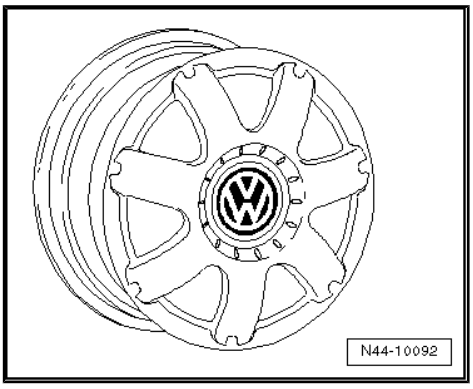

Protected by copyright. Copying for private or commercial purposes, in part or in whole, is not permitted unless authorised by Volkswagen AG. Volkswagen AG does not guarantee or accept any liability with respect to the correctness of information in this document. Copyright by Volkswagen AG.
satelettronica

1C0 601 025 J - Wheel and tyre combination ⇒ page 233

Size:	7 J x 17
Wheel offset in mm:	38
Wheel load in kg:	550

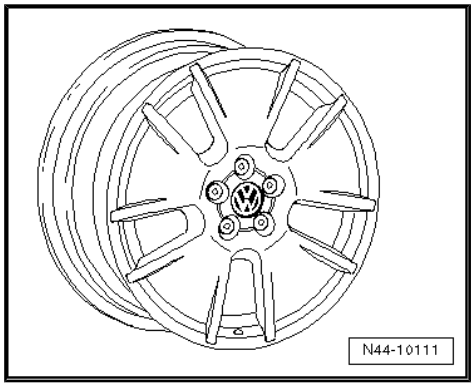

1C0 601 025 K, 1C0 601 025 Q - Wheel and tyre combination
⇒ page 233

Alloy wheels with exchangeable trim elements

Size:	7 J x 17
Wheel offset in mm:	38
Wheel load in kg:	550

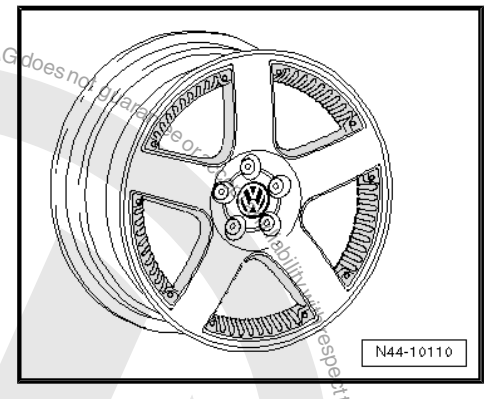

1J0 601 025 BE - Wheel and tyre combination ⇒ page 233

Size:	7 J x 17
Wheel offset in mm:	38
Wheel load in kg:	550

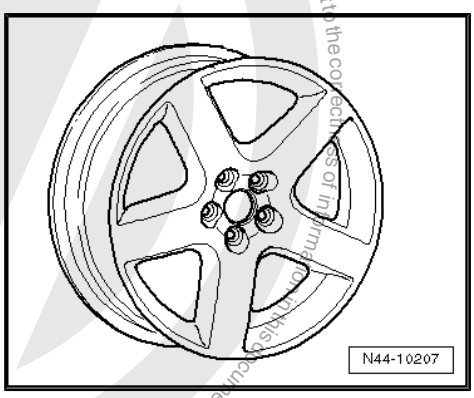

1J0 601 025 AS - Wheel and tyre combination ⇒ page 233

Size:	7 J x 17
Wheel offset in mm:	38
Wheel load in kg:	550

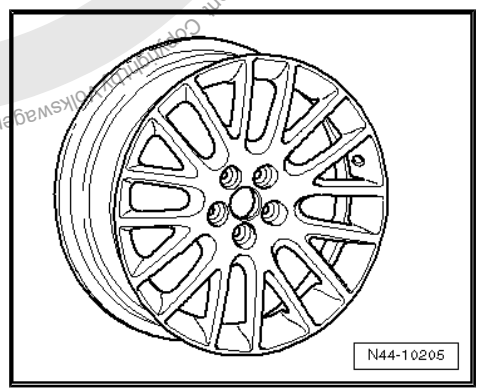

Protected by copyright. Copying for private or commercial purposes, in part or in whole, is not permitted unless authorised by Volkswagen AG. Volkswagen AG does not guarantee or assume any liability with respect to the correctness of information in this document. Copyright by Volkswagen AG.
satelettronica

1C0 601 025 M - Wheel and tyre combination ⇒ page 233

Size:	7 J x 17
Wheel offset in mm:	38
Wheel load in kg:	550

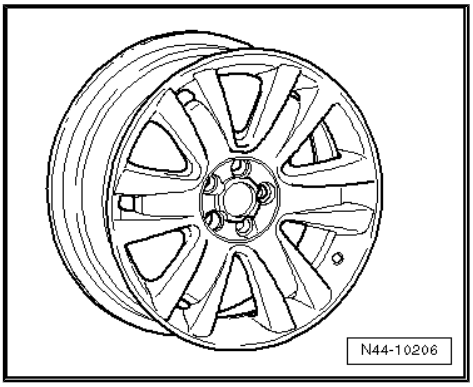

19.2.5 7 1/2 J x 17

The following wheels are permitted only if the stated conditions ⇒ page 245 **are fulfilled.**

> ⚠ **Caution**
>
> *Observe the allocation of wheels and tyres to the respective engines, which are listed in the overview table* ⇒ page 232 *.*

1J0 601 025 BF - Wheel and tyre combination ⇒ page 233

Size:	7 1/2 J x 17
Wheel offset in mm:	38
Wheel load in kg:	550

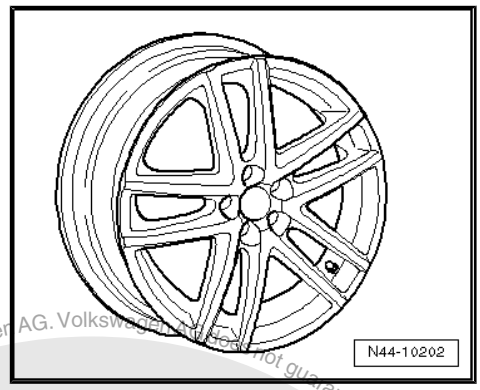

1J0 601 025 BH - Wheel and tyre combination ⇒ page 233

Size:	7 1/2 J x 17
Wheel offset in mm:	38
Wheel load in kg:	560

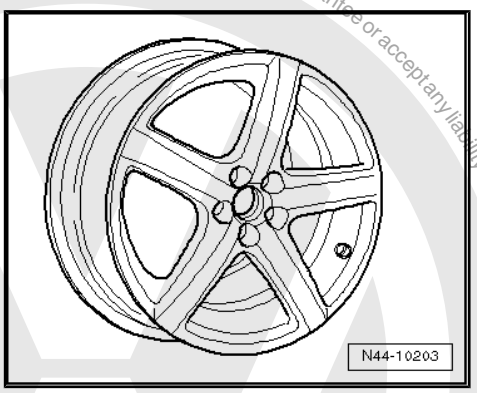

19.3 Conditions for fitting 17" wheels and tyres

17" wheels with 225/45 R 17 are possible only:

1. For vehicles from model year 2001.

2. If 17" sports running gear and a steering box with reduced steering arm travel are installed in the vehicle

satelettronica
Copyright by Volkswagen AG. Volkswagen does not guarantee or accept any liability with respect to the correctness of information in this document. Copyright by Volkswagen AG. Protected by copyright. Copying for private or commercial purposes, in part or in whole, is not permitted unless authorised by Volkswagen AG.

Allocation of steering box PR No. to engine:	
PR No. of steering box	**Engine**
QZ 3[13)]	1.8l; 2.0l; 2.3l petrol engines; 1.9l diesel engines
QZ 4[13)]	Through 1.6l petrol engines
QZ 5[13)]	VR6 (US version); VR6 4Motion

13) Replacement part numbers ⇒ Electronic parts catalogue „ETKA“

3. If tyres with a maximum width of 218 mm are used.

4. If snow chains are not used.

Maximum width of 17" tyres

If a vehicle is retrofitted with 17" tyres or if existing 17" tyres are renewed, use only tyres with a maximum width -a- which does not exceed 218 mm during use [14)].

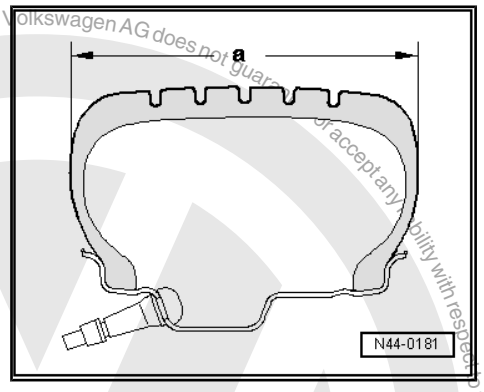

14) The measured width of the tyre including lettering on 7 J x 17 or $7^1/_2$ J x 17 and at the specified tyre pressure.

If wider tyres are used, under certain circumstances, the tyres may contact the front axle and the bodywork while the car is being driven.

Protected by copyright. Copying for private or commercial purposes, in part or in whole, is not permitted unless authorised by Volkswagen AG. Volkswagen AG does not guarantee or accept any liability with respect to the correctness of information in this document. Copyright by Volkswagen AG.
satelettronica

Volkswagen AG. Volkswagen AG does not guarantee or accept any liability with respect to the correctness of information in this document. Copyright by Volkswagen AG. Copyright. Copying for private or commercial purposes, in part or in whole, is not permitted unless authorised by Volkswagen AG.

20 Jetta from model year 2006

General

Volkswagen vehicles are built according to the latest findings in safety engineering. To keep it that way, we recommend the use of genuine Volkswagen spare parts only. You can recognise this by the VW Audi logo and by the part number. It has been established that these parts are reliable, safe and suitable.

Despite constant appraisal of the market, we cannot assess other products on these points, even when in isolated cases they have been passed by official inspectors or have been granted official approval. Therefore, we cannot, of course, assume any liability if these products are installed.

> ⚠ **WARNING**
>
> *The products from Volkswagen genuine parts and Votex genuine accessories may differ in fitting requirements, torque specifications and so on.*
>
> *Always follow the respective fitting and operating instructions.*

The wheel and tyre combinations or changes listed in the vehicle tables refer exclusively to Volkswagen Genuine wheels. Approval of wheel and tyre combinations or a change to wheels from the accessories trade is not possible with the parts certificate attached here.

> ⚠ **WARNING**
>
> *The fitting instructions and torque specifications for wheels from Votex genuine accessories may differ from those intended for wheels from Volkswagen genuine parts.*
>
> *Therefore, always observe the torque settings for the wheel bolts as well as the respective fitting and operating instructions.*

20.1 Jetta, type 1KM from model year 2006

Attachment to parts certificate 1901/05

Type Approval No.: e1*2001/116*0328*00

Overview

Model engine output	Tyres	Tyre size	Wheel	Off-set in mm	Snow chains	Remarks
1.6l 75 kW petrol engine	Standard tyres	195/65 R 15 91H	6 J x 15 ⇒ page 249	47	Yes	General notes on winter tyres
1.9l 77 kW TDI diesel engines	Modification	195/65 R 15 91V	6 J x 15 ⇒ page 249	47	Yes	Tyre makes recommended by Volkswagen: ◆ Summer tyres ⇒ page 375 ◆ All-season tyres ⇒ page 384 ◆ Winter tyres ⇒ page 393
		195/65 R 15 91H/V	$6^1/_2$ J x 15 ⇒ page 250	50	Yes	

satelettronica

Protected by copyright. Copyright by Volkswagen AG. Volkswagen AG does not guarantee or accept any liability with respect to the correctness of information in this document. Copyright by Volkswagen AG. Reproduction in whole or in part is prohibited unless authorised by Volkswagen AG. Volkswagen AG does not guarantee or accept any liability with respect to the correctness of information in this document. Copyright by Volkswagen AG.

Model engine output	Tyres	Tyre size	Wheel	Off-set in mm	Snow chains	Remarks
		205/60 R 15 91H/V	6 J x 15 ⇒ page 249	47	Yes	
		205/55 R 16 91H/V/W	6 1/2 J x 16 ⇒ page 251	50	No	
		225/45 R 17 91H/V/W	7 J x 17 ⇒ page 252	54	No	
	Winter tyres	195/65 R 15 91Q/T/H	6 J x 15 ⇒ page 249	47	Yes	
		205/55 R 16 91Q/T/H	6 J x 16 ⇒ page 250	50	Yes	
2.0l 103 kW TDI diesel engines	Standard tyres	205/55 R 16 91V	6 1/2 J x 16 ⇒ page 251	50	No	
	Modification	195/65 R 15 91H/V	6 J x 15 ⇒ page 249	47	Yes	
		195/65 R 15 91H/V	6 1/2 J x 15 ⇒ page 250	50	Yes	
		205/60 R 15 91H/V	6 J x 15 ⇒ page 249	47	Yes	
		205/55 R 16 91H/V/W	6 1/2 J x 16 ⇒ page 251	50	No	
		225/45 R 17 91H/V/W	7 J x 17 ⇒ page 164	54	No	
	Winter tyres	195/65 R 15 91Q/T/H	6 J x 15 ⇒ page 249	47	Yes	
		205/55 R 16 91Q/T/H	6 J x 16 ⇒ page 250	50	Yes	
2.0l 110 kW petrol engine	Standard tyres	205/55 R 16 91V	6 1/2 J x 16 ⇒ page 251	50	No	
	Modification	195/65 R 15 91V	6 J x 15 ⇒ page 249	47	Yes	
		195/65 R 15 91V	6 1/2 J x 15 ⇒ page 250	50	Yes	
		205/60 R 15 91V	6 J x 15 ⇒ page 249	47	Yes	
		225/45 R 17 91V/W	7 J x 17 ⇒ page 164	54	No	
	Winter tyres	195/65 R 15 91Q/T/H	6 J x 15 ⇒ page 249	47	Yes	

satelettronica

Model engine output	Tyres	Tyre size	Wheel	Off-set in mm	Snow chains	Remarks
		205/55 R 16 91Q/T/H	6 J x 16 ⇒ page 250	50	Yes	

Tyre pressures can be found on the inside of the fuel tank flap or in ⇒ Maintenance ; Booklet 20.1 .

20.2 Wheel allocation for Jetta, type 1KM from model year 2006

Explanation of information on wheels

Wheel bolt torque settings ⇒ Running gear, axles, steering; Rep. gr. 44 ; Wheel bolt torque settings .

Pitch circle diameter	112 mm
Number of wheel bolt holes:	5

20.2.1 6 J x 15

Caution

Observe the allocation of wheels and tyres to the respective engines, which are listed in the overview table ⇒ page 247 .

1K0 601 027 C - Wheel and tyre combination ⇒ page 247

Size:	6 J x 15
Wheel offset in mm:	47
Wheel load in kg:	600

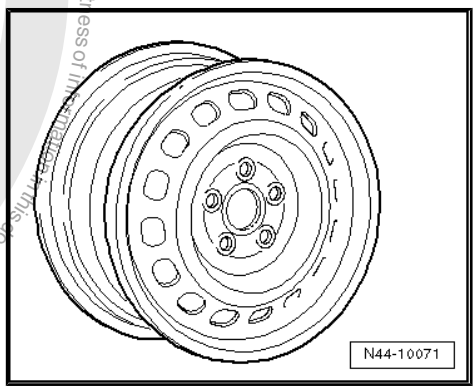

2K0 601 027 - Wheel and tyre combination ⇒ page 247

Size:	6 J x 15
Wheel offset in mm:	47
Wheel load in kg:	625

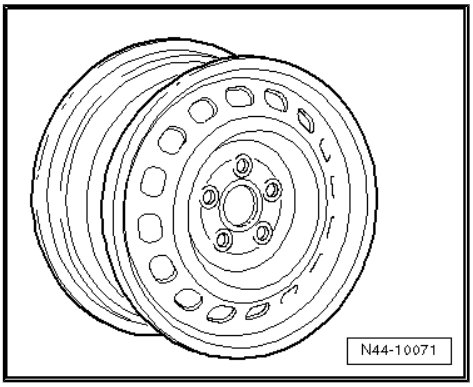

Protected by copyright. Copyright by Volkswagen AG.
Copyright by Volkswagen AG. Volkswagen AG does not guarantee or accept any liability with respect to the correctness of information in this document.
satelettronica

20.2.2 6 1/2 J x 15

Caution

Observe the allocation of wheels and tyres to the respective engines, which are listed in the overview table ⇒ page 247 *.*

1K0 601 025 A - Wheel and tyre combination ⇒ page 247

Size:	6 1/2 J x 15
Wheel offset in mm:	50
Wheel load in kg:	600

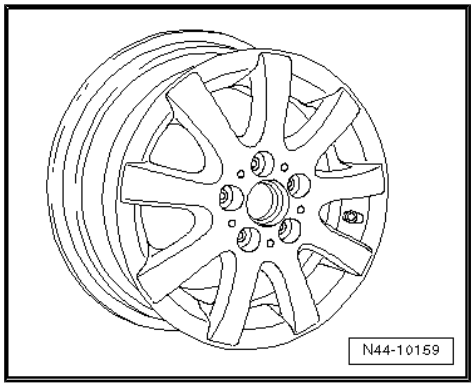

1K0 601 025 F - Wheel and tyre combination ⇒ page 247

Size:	6 1/2 J x 15
Wheel offset in mm:	50
Wheel load in kg:	615

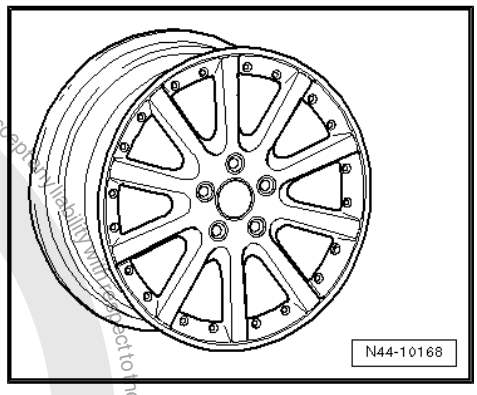

20.2.3 6 J x 16

Caution

Observe the allocation of wheels and tyres to the respective engines, which are listed in the overview table ⇒ page 247 *.*

Snow tyres

8P0 601 027 - Wheel and tyre combination ⇒ page 248

Size:	6 J x 16
Wheel offset in mm:	50
Wheel load in kg:	600

Use the following wheel bolt caps for the wheel bolts:

- 1K0.601.173 (4 per wheel)
- 1K0.601.173 (1 per wheel)

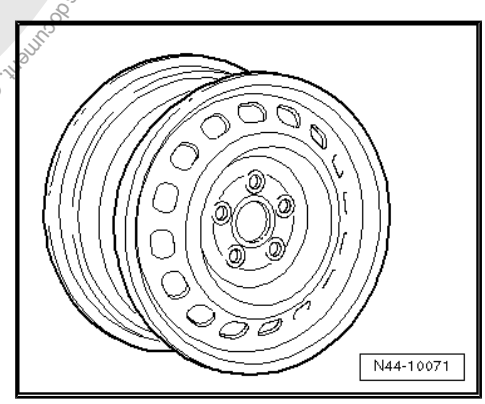

Protected by copyright. Copyright by Volkswagen AG. Volkswagen AG does not guarantee or accept any liability with respect to the correctness of information in this document. Copyright by Volkswagen AG. Reproduction, in part or in whole, is not permitted unless authorised by Volkswagen AG or contrary to law.
satelettronica

1K0 601 025 Q - Wheel and tyre combination ⇒ page 248

Size:	6 J x 16 EH2
Wheel offset in mm:	50
Wheel load in kg:	615

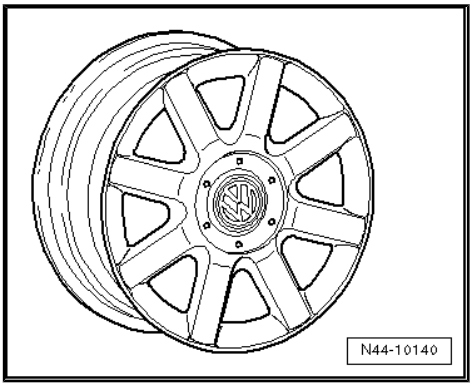

20.2.4 6 1/2 J x 16

> ⚠ **Caution**
>
> *Observe the allocation of wheels and tyres to the respective engines, which are listed in the overview table* ⇒ page 247 *.*

1K0 601 027 A - Wheel and tyre combination ⇒ page 248

Size:	6 1/2 J x 16
Wheel offset in mm:	50
Wheel load in kg:	615

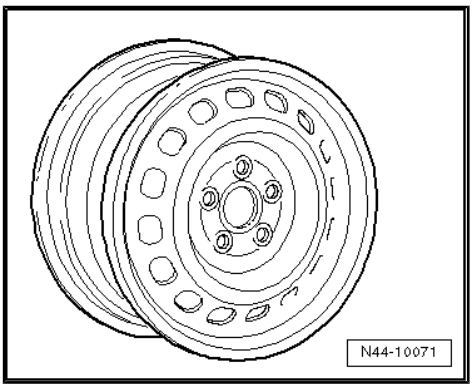

1T0 601 025 C - Wheel and tyre combination ⇒ page 248

Size:	6 1/2 J x 16
Wheel offset in mm:	50
Wheel load in kg:	615

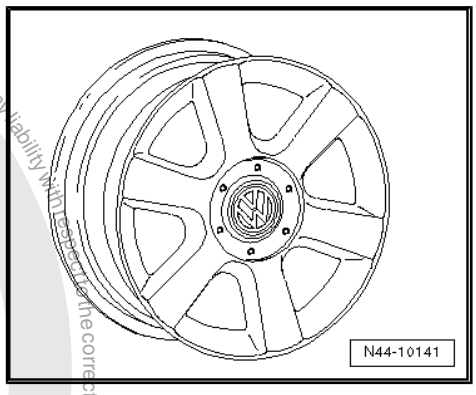

1K0 601 025 P - Wheel and tyre combination ⇒ page 248

Size:	6 1/2 J x 16
Wheel offset in mm:	50
Wheel load in kg:	615

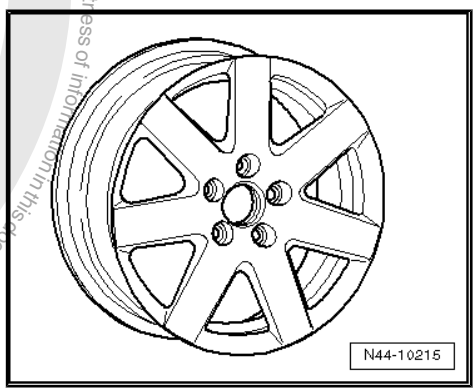

Protected by copyright. Copying for private or commercial purposes, in part or in whole, is not permitted unless authorised by Volkswagen AG. Volkswagen AG does not guarantee or accept any liability with respect to the correctness of information in this document. Copyright by Volkswagen AG.
satelettronica

1K0 601 025 R - Wheel and tyre combination ⇒ page 248

Size:	$6^1/_2$ J x 16
Wheel offset in mm:	50
Wheel load in kg:	615

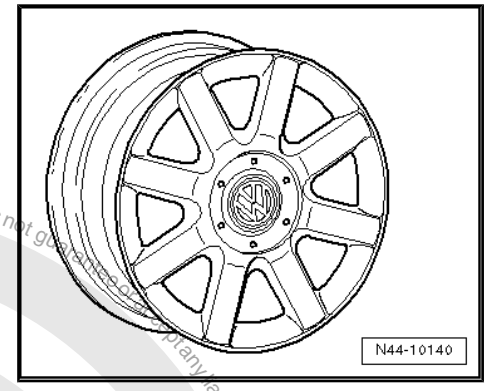

20.2.5 7 J x 17

Caution

Observe the allocation of wheels and tyres to the respective engines, which are listed in the overview table ⇒ page 247 *.*

1K0 601 025 B - Wheel and tyre combination ⇒ page 248

Size:	7 J x 17
Wheel offset in mm:	54
Wheel load in kg:	615

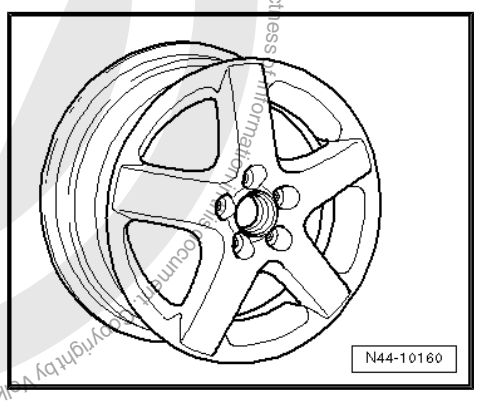

1K0 601 025 C - Wheel and tyre combination ⇒ page 248

Size:	7 J x 17
Wheel offset in mm:	54
Wheel load in kg:	615

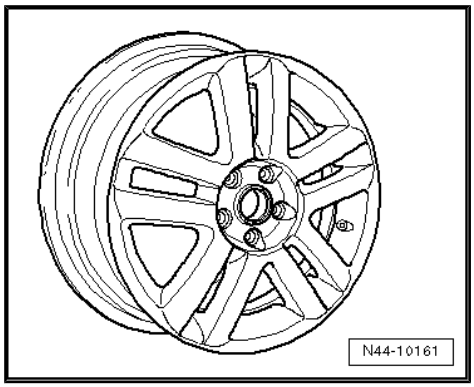

1K0 601 025 J - Wheel and tyre combination ⇒ page 248

Size:	7 J x 17
Wheel offset in mm:	54
Wheel load in kg:	615

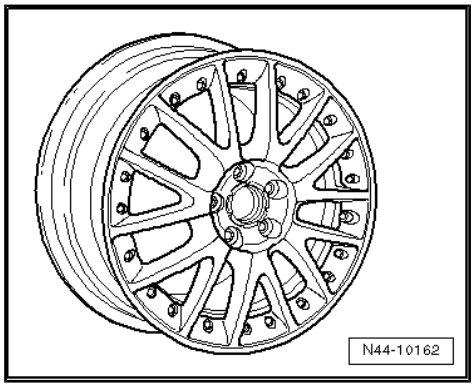

Protected by copyright. Copying for private or commercial purposes, in part or in whole, is not permitted unless authorised by Volkswagen AG. Volkswagen AG does not guarantee or accept any liability with respect to the correctness of information in this document. Copyright by Volkswagen AG.

satelettronica

Protected by copyright. Copying for private or commercial purposes, in part or in whole, is not permitted unless authorised by Volkswagen AG. Volkswagen AG does not guarantee or accept any liability with respect to the correctness of information in this document. Copyright by Volkswagen AG.

1K0 601 025 K - Wheel and tyre combination ⇒ page 248

Size:	7 J x 17
Wheel offset in mm:	54
Wheel load in kg:	615

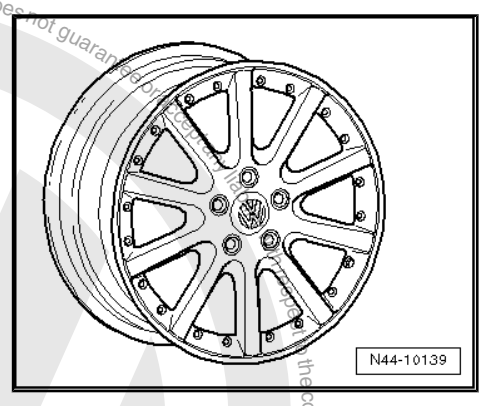

1K0 601 025 M - Wheel and tyre combination ⇒ page 248

Size:	7 J x 17
Wheel offset in mm:	54
Wheel load in kg:	615

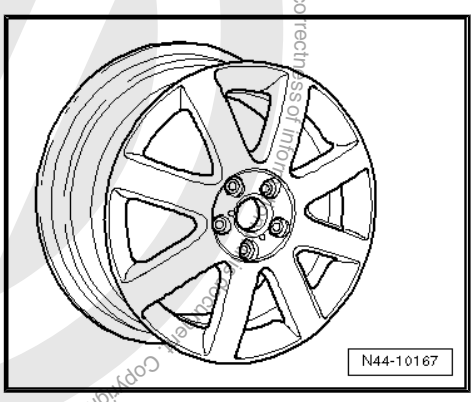

1K0 601 025 T - Wheel and tyre combination ⇒ page 248

Size:	7 J x 17
Wheel offset in mm:	54
Wheel load in kg:	615

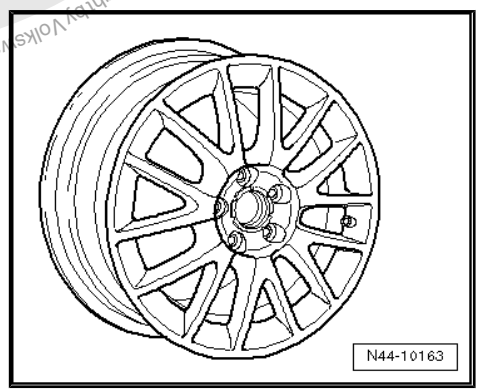

1K0 601 025 AF - Wheel and tyre combination ⇒ page 248

Size:	7 J x 17
Wheel offset in mm:	54
Wheel load in kg:	630

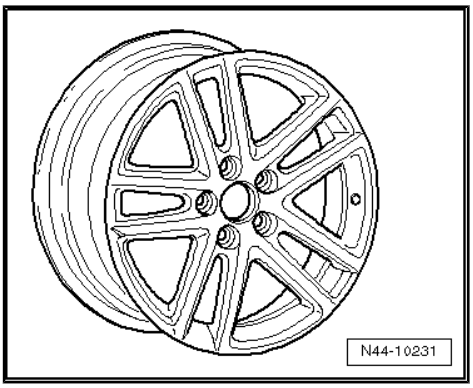

satelettronica

1K0 601 025 AE - Wheel and tyre combination ⇒ page 248

Size:	7 J x 17
Wheel offset in mm:	54
Wheel load in kg:	630

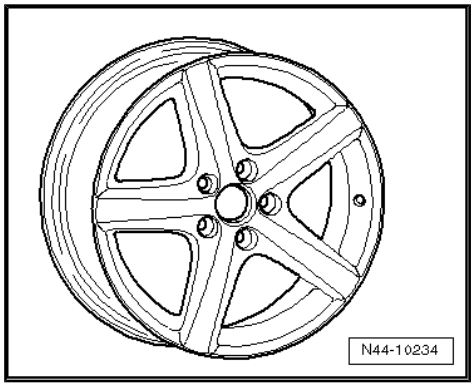

Protected by copyright. Copying for private or commercial purposes, in part or in whole, is not permitted unless authorised by Volkswagen AG. Volkswagen AG does not guarantee or accept any liability with respect to the correctness of information in this document. Copyright by Volkswagen AG.

satelettronica

21 New Beetle from model year 1999

General

Volkswagen vehicles are built according to the latest findings in safety engineering. To keep it that way, we recommend the use of genuine Volkswagen spare parts only. You can recognise this by the VW Audi logo and by the part number. It has been established that these parts are reliable, safe and suitable.

Despite constant appraisal of the market, we cannot assess other products on these points, even when in isolated cases they have been passed by official inspectors or have been granted official approval. Therefore, we cannot, of course, assume any liability if these products are installed.

> ⚠ WARNING
>
> *The products from Volkswagen genuine parts and Votex genuine accessories may differ in fitting requirements, torque specifications and so on.*
>
> *Always follow the respective fitting and operating instructions.*

The wheel and tyre combinations or changes listed in the vehicle tables refer exclusively to Volkswagen Genuine wheels. Approval of wheel and tyre combinations or a change to wheels from the accessories trade is not possible with the parts certificate attached here.

> ⚠ WARNING
>
> *The fitting instructions and torque specifications for wheels from Votex genuine accessories may differ from those intended for wheels from Volkswagen genuine parts.*
>
> *Therefore, always observe the torque settings for the wheel bolts as well as the respective fitting and operating instructions.*

21.1 New Beetle, type 9C from model year 1999 through model year 2006

Attachment to parts certificate 1909/05

Type Approval No.: e1*97/27*0106*00

Type Approval No.: e1*98/14*0106*01 to e1*98/14*0106*13

Type Approval No.: e1*2001/116*0106*14 through e1*2001/116*0106*17

Overview

Model engine output	Tyres	Tyre size	Wheel	Off-set in mm	Snow chains	Remarks
1.4l 55 kW petrol engine	Standard tyres	195/65 R 15 91T	6 J x 15 ⇒ page 258	38	Yes	General notes on winter tyres
	Modification	205/55 R 16 91H	$6^1/_2$ J x 16 ⇒ page 261	42	No	Tyre makes recommended by Volkswagen:

Protected by copyright. Copying for private or commercial purposes, in part or in whole, is not permitted unless authorised by Volkswagen AG. Volkswagen AG does not guarantee or accept any liability with respect to the correctness of information in this document. Copyright by Volkswagen AG.

sateletronica

Model engine output	Tyres	Tyre size	Wheel	Off-set in mm	Snow chains	Remarks
		225/45 R 17 91W	7 J x 17 ⇒ page 265	38	No	♦ Summer tyres ⇒ page 371 ♦ All-season tyres ⇒ page 382 ♦ Winter tyres ⇒ page 392
	Winter tyres	195/65 R 15 91Q/T	6 J x 15 ⇒ page 258	38	Yes	
		205/55 R 16 91T/H	$5^1/_2$ J x 16 ⇒ page 260	36	Yes	
1.9l 66 kW TDI	Standard tyres	195/65 R 15 91T	6 J x 15 ⇒ page 258	38	Yes	The 225/45 R 17 tyre may be mounted on the 7 J x 17 or the $7^1/_2$ J x 17 rim only if the listed conditions ⇒ page 268 are fulfilled!
	Modification	205/55 R 16 91H	$6^1/_2$ J x 16 ⇒ page 261	42	No	
		225/45 R 17 91W	7 J x 17 ⇒ page 265	38	No	
		225/45 R 17 91W	$7^1/_2$ J x 17 ⇒ page 267	38	No	
	Winter tyres	195/65 R 15 91Q/T	6 J x 15 ⇒ page 258	38	Yes	
		205/55 R 16 91T/H	$5^1/_2$ J x 16 ⇒ page 260	36	Yes	
1.6l 74 kW; 2.0l 85 kW; petrol engines	Standard tyres	195/65 R15 91H	6 J x 15 ⇒ page 258	38	Yes	The adhesive weights for balancing must be attached to the inner side of the rim of $6^1/_2$ J x 16 aluminium wheels!
	Modification	205/55 R 16 91H	$6^1/_2$ J x 16 ⇒ page 261	42	No	
		225/45 R 17 91W	7 J x 17 ⇒ page 265	38	No	
		225/45 R 17 91W	$7^1/_2$ J x 17 ⇒ page 267	38	No	
	Winter tyres	195/65 R 15 91Q/T	6 J x 15 ⇒ page 258	38	Yes	

Protected by copyright. Copying for private or commercial purposes, in part or in whole, is not permitted unless authorised by Volkswagen AG. Volkswagen AG does not guarantee or accept any liability with respect to the correctness of information in this document. Copyright by Volkswagen AG.

satelettronica

Model engine output	Tyres	Tyre size	Wheel	Off-set in mm	Snow chains	Remarks
		205/55 R 16 91T/H	$5^1/_2$ J x 16 ⇒ page 260	36	Yes	
1.6l 75 kW petrol engine* ⇒ page 257 1.9l 74 kW TDI** ⇒ page 257	Standard tyres	195/65 R15 91H	6 J x 15 ⇒ page 258	38	Yes	* Type Approval No.: e1*98/14*0106*04
	Modification	195/65 R15 91T	6 J x 15 ⇒ page 258	38	No	** Type Approval No.: e1*98/14*0106*05
		205/55 R 16 91H	$6^1/_2$ J x 16 ⇒ page 261	42	No	
		225/45 R 17 91W	7 J x 17 ⇒ page 265	38	No	
		225/45 R 17 91W	$7^1/_2$ J x 17 ⇒ page 267	38	Yes	
	Winter tyres	195/65 R 15 91Q/T	6 J x 15 ⇒ page 258	38	Yes	
		205/55 R 16 91T/H	$5^1/_2$ J x 16 ⇒ page 260	36	Yes	
1.8l 110 kW petrol engine	Standard tyres	195/65 R15 91V	6 J x 15 ⇒ page 258	38	Yes	
	Modification	205/55 R 16 91V	$6^1/_2$ J x 16 ⇒ page 261	42	No	
		225/45 R 17 91W	7 J x 17 ⇒ page 265	38	No	
		225/45 R 17 91W	$7^1/_2$ J x 17 ⇒ page 267	38	No	
	Winter tyres	195/65 R 15 91Q/T	6 J x 15 ⇒ page 258	38	Yes	
		205/55 R 16 91T/H	$5^1/_2$ J x 16 ⇒ page 260	36	Yes	
2.3l 125 kW petrol engine	Standard tyres	205/55 R 16 91W	$6^1/_2$ J x 16 ⇒ page 261	42	No	
	Modification	205/55 R 16 91V	$6^1/_2$ J x 16 ⇒ page 261	42	No	
		225/45 R 17 91W	7 J x 17 ⇒ page 265	38	No	

Protected by copyright. Copying for private or commercial purposes, in part or in whole, is not permitted unless authorised by Volkswagen AG. Volkswagen AG does not guarantee or accept any liability with respect to the correctness of information in this document. Copyright by Volkswagen AG.
satelettronica

Model engine output	Tyres	Tyre size	Wheel	Off-set in mm	Snow chains	Remarks
		225/45 R 17 91W	$7^1/_2$ J x 17 ⇒ page 267	38	No	
	Winter tyres	205/55 R 16 91T/H	$5^1/_2$ J x 16 ⇒ page 260	36	Yes*** ⇒ page 258	*** Snow chains: Only the listed snow chains are approved! Article No. ⇒ page 258

Tyre pressures can be found on the inside of the fuel tank flap or in ⇒ Maintenance ; Booklet 14.1 .

Approved snow chains for New Beetle 2.3l 125 kW

The snow chains listed below are permitted only in conjunction with the wheel and tyre combinations listed next to them!

Chain manufacturer Article No.	Accessories part No.	Tyre size	Wheel	Part No.
Rud 460 22	000 091 386 D	205/55 R 16 91T/H	$5^1/_2$ J x 16 ET 36	1J0 601 025 M 1J0 601 025 AF 1J0 601 025 AP
Ottinger 100 905	-			

21.2 Wheel allocation for New Beetle, type 9C from model year 1999 through model year 2006

Explanation of information on wheels

Wheel bolt torque settings ⇒ Running gear, axles, steering; Rep. gr. 44 ; Wheel bolt torque settings

Pitch circle diameter	100 mm
Number of wheel bolt holes:	5

21.2.1 6 J x 15

Caution

Observe the allocation of wheels and tyres to the respective engines, which are listed in the overview table ⇒ page 255 .

Protected by copyright. Copying for private or commercial purposes, in part or in whole, is not permitted unless authorised by Volkswagen AG. Volkswagen AG does not guarantee or accept any liability with respect to the correctness of information in this document. Copyright by Volkswagen AG.
satelettronica

Protected by copyright. Copying for private or commercial purposes, in part or in whole, is not permitted unless authorised by Volkswagen AG. Volkswagen AG does not guarantee or accept any liability with respect to the correctness of information.

1J0 601 025 B, 1J0 601 025 AA - Wheel and tyre combination
⇒ page 255

For vehicles with maximum permitted axle load of 1,000 kg

Size:	6 J x 15
Wheel offset in mm:	38
Wheel load in kg:	500

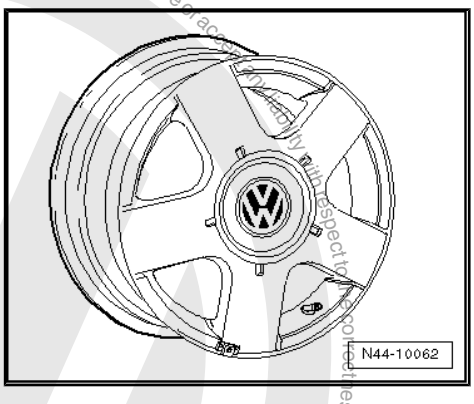

1J0 601 027 K - Wheel and tyre combination
⇒ page 255

Size:	6 J x 15
Wheel offset in mm:	38
Wheel load in kg:	550

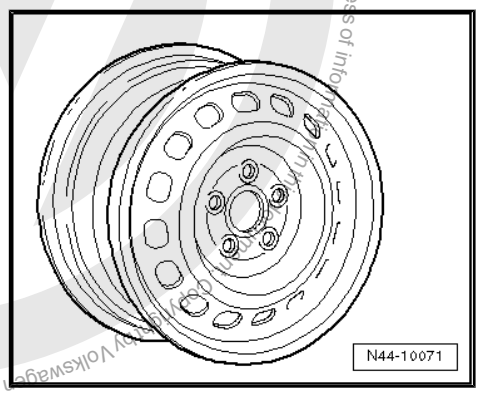

1J0 601 027 H, 1J0 601 027 Q - Wheel and tyre combination
⇒ page 255

Size:	6 J x 15
Wheel offset in mm:	38
Wheel load in kg:	550

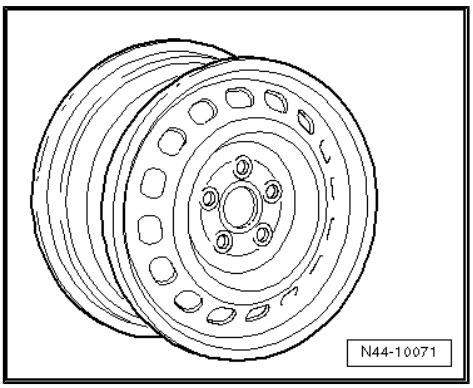

1J0 601 025 Q - Wheel and tyre combination
⇒ page 255

Size:	6 J x 15
Wheel offset in mm:	38
Wheel load in kg:	530

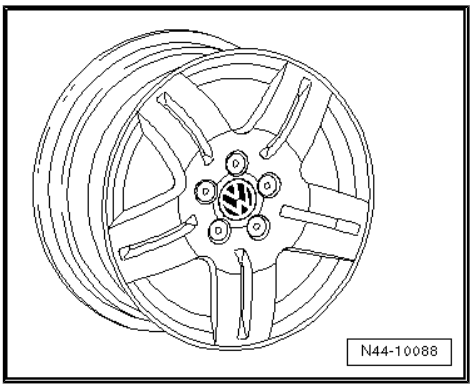

satelettronica

1C0 601 025 F - Wheel and tyre combination ⇒ page 255

Size:	6 J x 15
Wheel offset in mm:	38
Wheel load in kg:	550

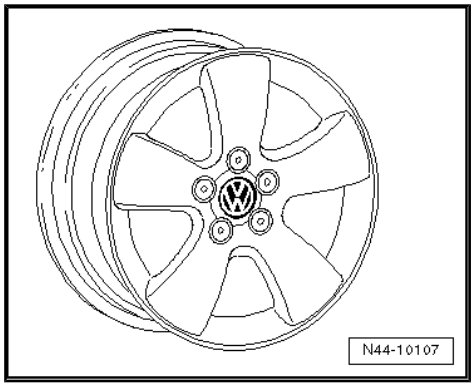

1J0 601 025 P, 1J0 601 025 AL - Wheel and tyre combination ⇒ page 255

Size:	6 J x 15
Wheel offset in mm:	38
Wheel load in kg:	550

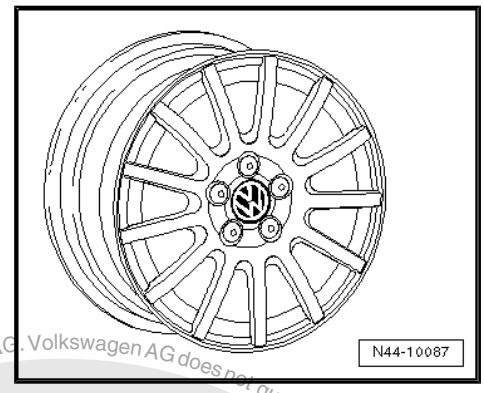

1J0 601 025 BD - Wheel and tyre combination ⇒ page 255

Size:	6 J x 15
Wheel offset in mm:	38
Wheel load in kg:	580

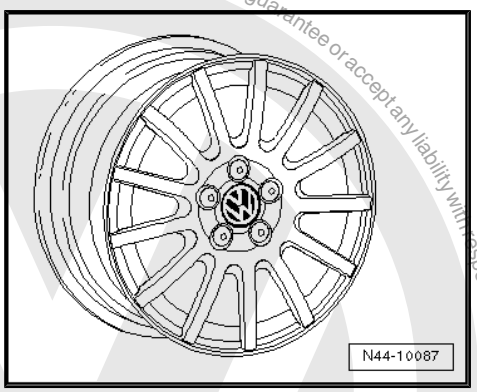

21.2.2 5 1/2 J x 16

Caution

Observe the allocation of wheels and tyres to the respective engines, which are listed in the overview table ⇒ page 255 *.*

Protected by copyright. Copying for private or commercial purposes, in part or in whole, is not permitted unless authorised by Volkswagen AG. Volkswagen AG does not guarantee or accept any liability with respect to the correctness of information in this document. Copyright by Volkswagen AG.
satelettronica

Snow tyres

1J0 601 025 M, 1J0 601 025 AF - Wheel and tyre combination
⇒ page 256

Size:	$5^1/_2$ J x 16
Wheel offset in mm:	36
Wheel load in kg:	550

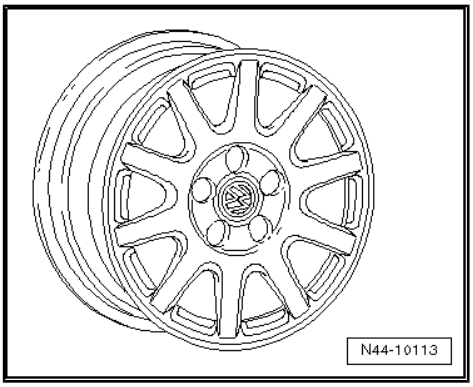

1J0 601 025 AP - Wheel and tyre combination ⇒ page 256

Size:	$5^1/_2$ J x 16
Wheel offset in mm:	36
Wheel load in kg:	550

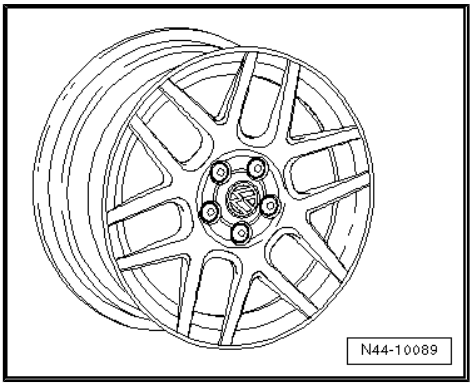

21.2.3 $6^1/_2$ J x 16

Caution

Observe the allocation of wheels and tyres to the respective engines, which are listed in the overview table *⇒ page 255* *.*

1C0 601 025 A, 1C0 601 025 D - Wheel and tyre combination
⇒ page 255

For vehicles with maximum permitted axle load of 1,000 kg

Size:	$6^1/_2$ J x 16
Wheel offset in mm:	42
Wheel load in kg:	500

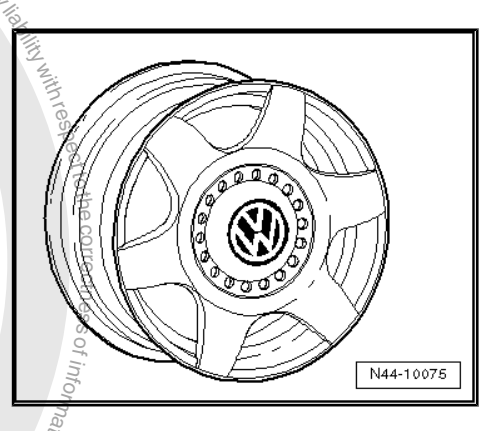

Protected by copyright. Copying for private or commercial purposes, in part or in whole, is not permitted unless authorised by Volkswagen AG. Volkswagen AG does not guarantee or accept any liability with respect to the correctness of information in this document. Copyright by Volkswagen AG.
satelettronica

1J0 601 027 L, 1J0 601 027 R - Wheel and tyre combination
⇒ page 255

Size:	$6^1/_2$ J x 16
Wheel offset in mm:	42
Wheel load in kg:	550

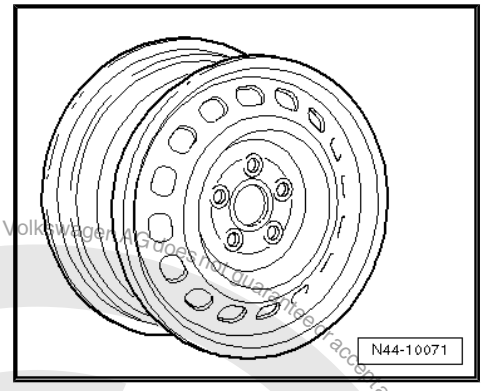

1J0 601 025 F, 1J0 601 025 AC - Wheel and tyre combination
⇒ page 255

Size:	$6^1/_2$ J x 16
Wheel offset in mm:	42
Wheel load in kg:	530

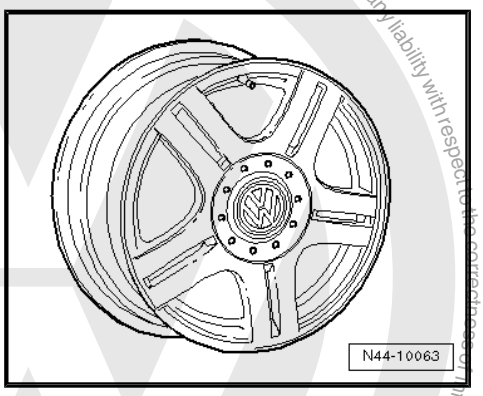

1J0 601 025 E, 1J0 601 025 AD - Wheel and tyre combination
⇒ page 255

Size:	$6^1/_2$ J x 16
Wheel offset in mm:	42
Wheel load in kg:	530

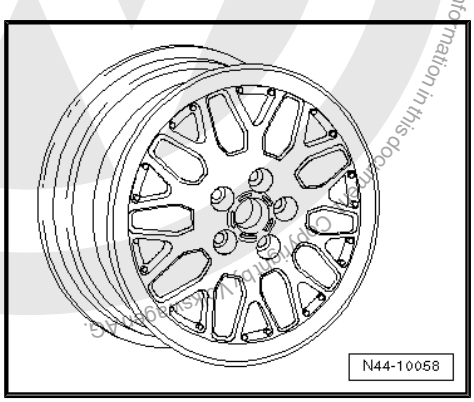

1J0 601 025 H, 1J0 601 025 AH - Wheel and tyre combination
⇒ page 255

Size:	$6^1/_2$ J x 16
Wheel offset in mm:	42
Wheel load in kg:	530

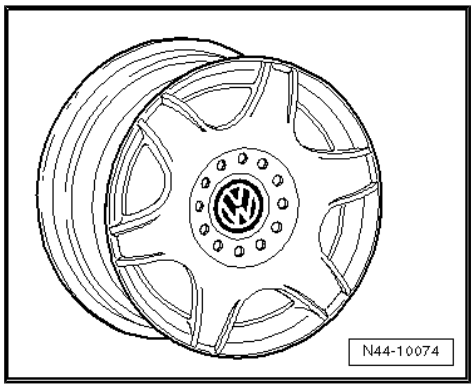

Protected by copyright. Copying for private or commercial purposes, in part or in whole, is not permitted unless authorised by Volkswagen AG. Volkswagen AG does not guarantee or accept any liability with respect to the correctness of information in this document. Copyright by Volkswagen AG.
satelettronica

1J0 601 025 L, 1J0 601 025 AE - Wheel and tyre combination
⇒ page 255

Size:	$6^1/_2$ J x 16
Wheel offset in mm:	42
Wheel load in kg:	550

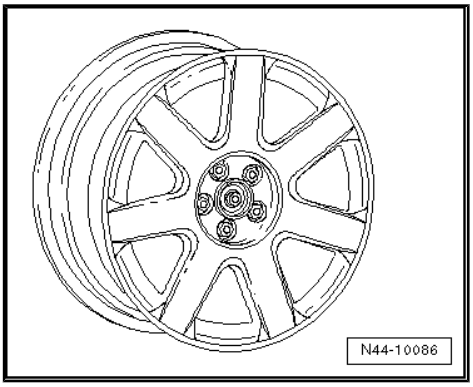

1J0 601 025 R, 1J0 601 025 AN - Wheel and tyre combination
⇒ page 255

Size:	$6^1/_2$ J x 16
Wheel offset in mm:	42
Wheel load in kg:	550

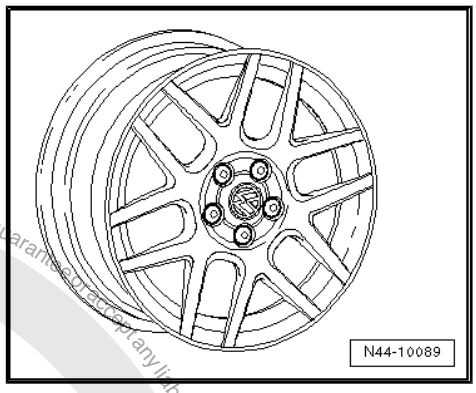

1J0 601 025 T, 1J0 601 025 AJ - Wheel and tyre combination
⇒ page 255

Size:	$6^1/_2$ J x 16
Wheel offset in mm:	42
Wheel load in kg:	550

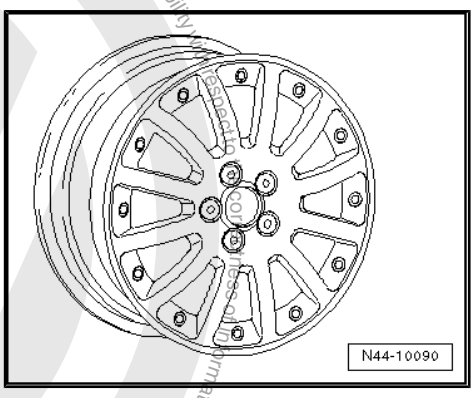

1C0 601 025 G, 1C0 601 025 AA - Wheel and tyre combination
⇒ page 255

Size:	$6^1/_2$ J x 16
Wheel offset in mm:	42
Wheel load in kg:	550

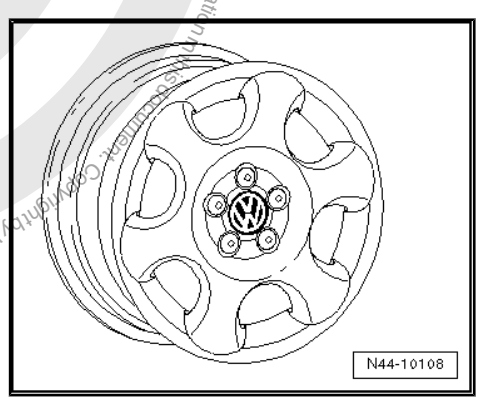

Protected by copyright. Copying for private or commercial purposes, in part or in whole, is not permitted unless authorised by Volkswagen AG. Volkswagen AG does not guarantee or accept any liability in respect of the correctness of information in this document. Copyright by Volkswagen AG.
satelettronica

1C0 601 025 H - Wheel and tyre combination ⇒ page 255

Size:	$6^1/_2$ J x 16
Wheel offset in mm:	42
Wheel load in kg:	550

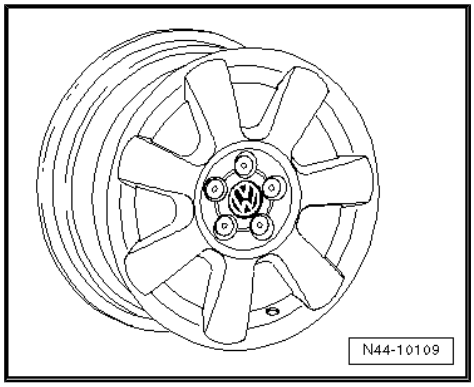

1C0 601 025 N - Wheel and tyre combination ⇒ page 255

Size:	$6^1/_2$ J x 16
Wheel offset in mm:	42
Wheel load in kg:	550

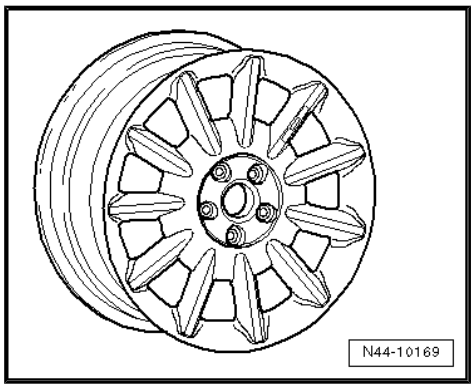

1C0 601 025 P - Wheel and tyre combination ⇒ page 255

Size:	$6^1/_2$ J x 16
Wheel offset in mm:	42
Wheel load in kg:	550

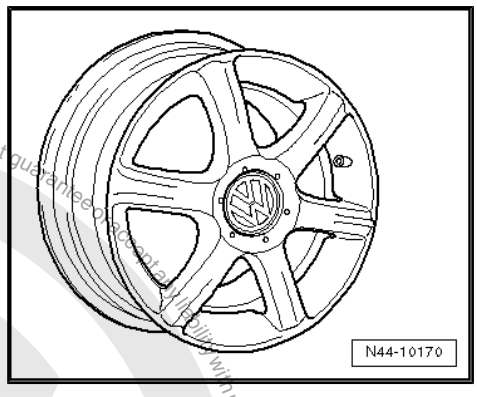

1C0 601 025 T - Wheel and tyre combination ⇒ page 255

Size:	$6^1/_2$ J x 16
Wheel offset in mm:	42
Wheel load in kg:	550

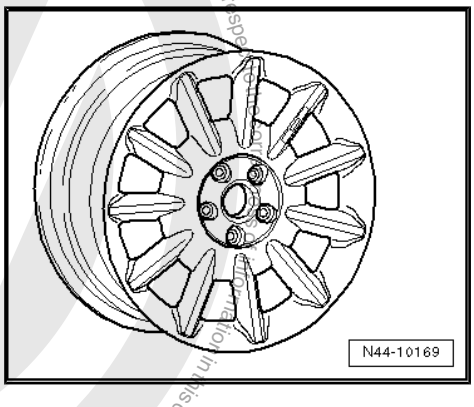

Protected by copyright. Copying for private or commercial purposes, in part or in whole, is not permitted unless authorised by Volkswagen AG. Volkswagen AG does not guarantee or accept any liability with respect to the correctness of information in this document. Copyright by Volkswagen AG.
satelettronica

21.2.4 7 J x 17

The following wheels are permitted only if the stated conditions ⇒ page 268 are fulfilled.

> ⚠ **Caution**
>
> *Observe the allocation of wheels and tyres to the respective engines, which are listed in the overview table ⇒ page 255 .*

1J0 601 025 J, 1J0 601 025 S - Wheel and tyre combination ⇒ page 256

Size:	7 J x 17
Wheel offset in mm:	38
Wheel load in kg:	580

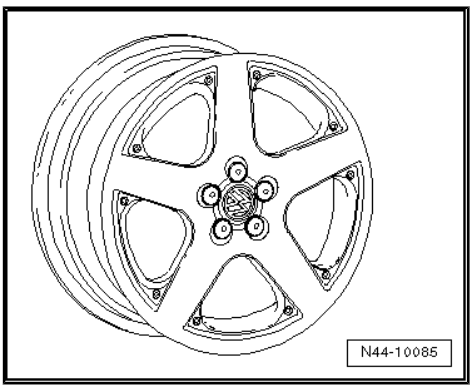

1J0 601 025 AB - Wheel and tyre combination ⇒ page 256

Size:	7 J x 17
Wheel offset in mm:	38
Wheel load in kg:	550

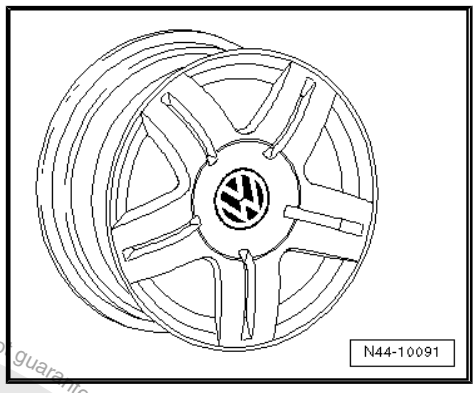

1C0 601 025 B, 1C0 601 025 E - Wheel and tyre combination ⇒ page 256

Size:	7 J x 17
Wheel offset in mm:	38
Wheel load in kg:	550

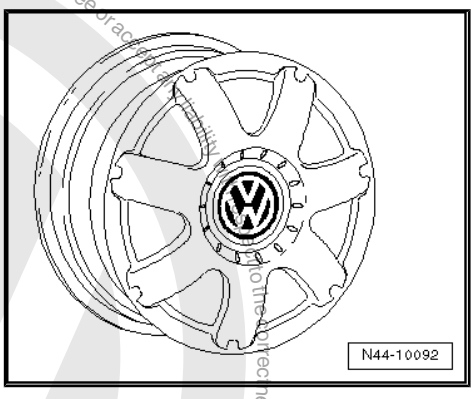

Protected by copyright. Copying for private or commercial purposes, in part or in whole is not permitted unless authorised by Volkswagen AG. Volkswagen AG does not guarantee or accept any liability with respect to the correctness of information in this document. Copyright by Volkswagen AG.
satelettronica

1C0 601 025 J - Wheel and tyre combination ⇒ page 256

Size:	7 J x 17
Wheel offset in mm:	38
Wheel load in kg:	550

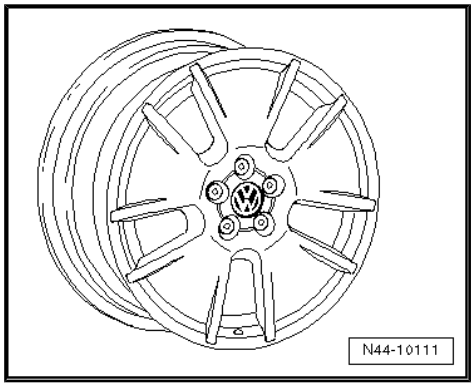

1C0 601 025 K, 1C0 601 025 Q - Wheel and tyre combination ⇒ page 256

Alloy wheels with exchangeable trim elements

Size:	7 J x 17
Wheel offset in mm:	38
Wheel load in kg:	550

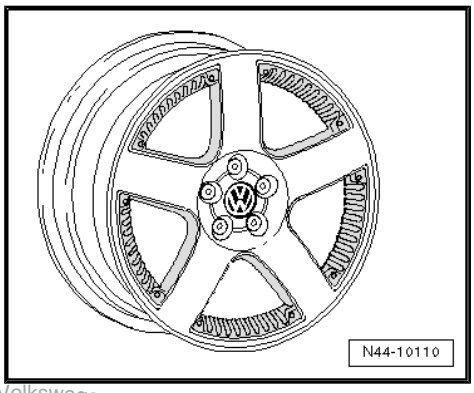

1J0 601 025 AS - Wheel and tyre combination ⇒ page 256

Size:	7 J x 17
Wheel offset in mm:	38
Wheel load in kg:	550

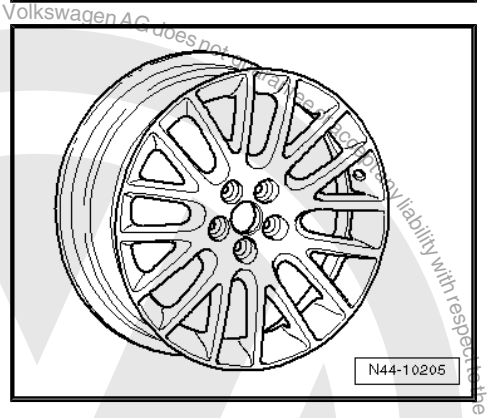

1C0 601 025 M - Wheel and tyre combination ⇒ page 256

Size:	7 J x 17
Wheel offset in mm:	38
Wheel load in kg:	550

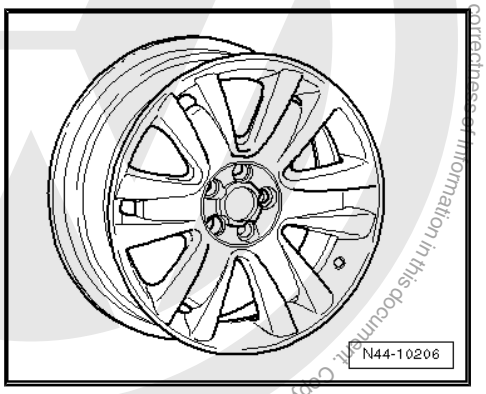

Protected by copyright. Copying for private or commercial purposes, in part or in whole, is not permitted unless authorised by Volkswagen AG. Volkswagen AG does not give any liability with respect to the correctness of information in this document. Copyright by Volkswagen AG.
satelettronica

1C0 601 025 R - Wheel and tyre combination ⇒ page 256

Size:	7 J x 17
Wheel offset in mm:	38
Wheel load in kg:	550

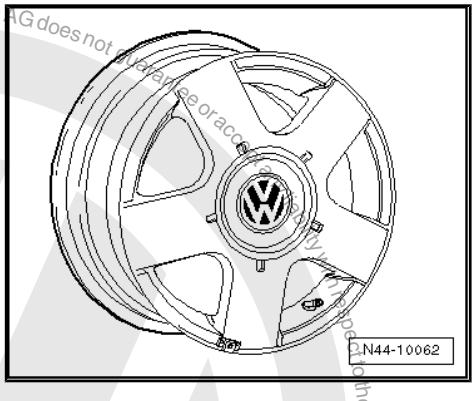

1J0 601 025 BE - Wheel and tyre combination ⇒ page 256

Size:	7 J x 17
Wheel offset in mm:	38
Wheel load in kg:	550

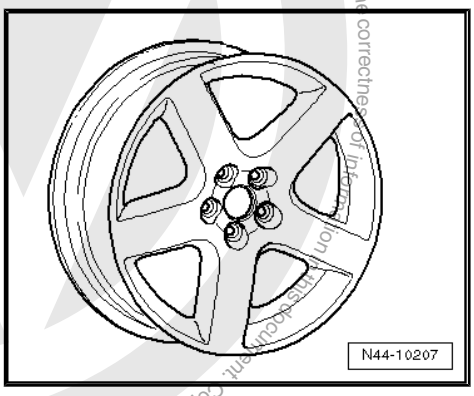

21.2.5 $7^1/_2$ J x 17

The following wheels are permitted only if the stated conditions ⇒ page 268 are fulfilled.

> ⚠ Caution
>
> *Observe the allocation of wheels and tyres to the respective engines, which are listed in the overview table ⇒ page 255 .*

1J0 601 025 BF - Wheel and tyre combination ⇒ page 256

Size:	$7^1/_2$ J x 17
Wheel offset in mm:	38
Wheel load in kg:	550

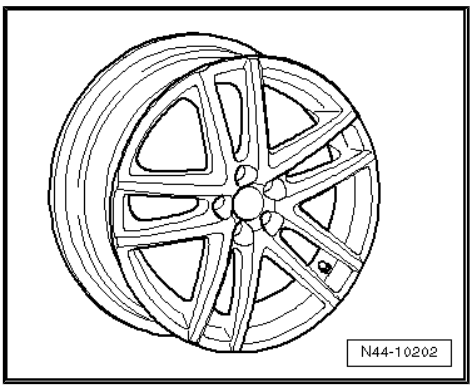

Protected by copyright. Copyright for private or commercial purposes, in part or in whole, is not permitted unless authorised by Volkswagen AG. Volkswagen AG does not guarantee or accept any liability with respect to the correctness of information in this document. Copyright by Volkswagen AG.
satelettronica

1J0 601 025 BH - Wheel and tyre combination ⇒ page 256

Size:	$7^1/_2$ J x 17
Wheel offset in mm:	38
Wheel load in kg:	560

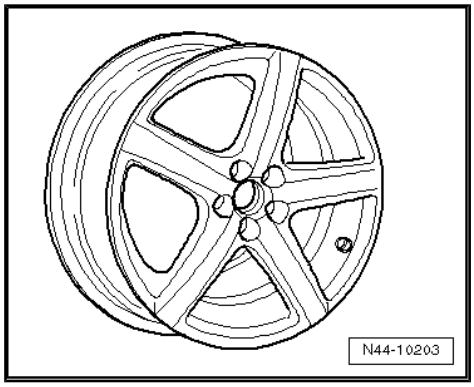

21.3 Conditions for fitting 17" wheels and tyres

17" wheels with 225/45 R 17 are possible only:

1. For vehicles from model year 2001.

2. If 17" sports running gear and a steering box with reduced steering arm travel are installed in the vehicle

Allocation of steering box PR No. to engine:	
PR No. of steering box	**Engine**
QZ 3[15)]	1.8l; 2.0l; 2.3l petrol engines; 1.9l diesel engines
QZ 4[15)]	Through 1.6l petrol engines

15) Replacement part numbers ⇒ Electronic parts catalogue „ETKA“

3. If tyres with a maximum width of 218 mm are used.

4. If snow chains are not used.

Maximum width of 17" tyres

If a vehicle is retrofitted with 17" tyres or if existing 17" tyres are renewed, use only tyres with a maximum width -a- which does not exceed 218 mm during use [16)].

16) The measured width of the tyre including lettering on 7 J x 17 or $7^1/_2$ J x 17 and at the specified tyre pressure.

If wider tyres are used, under certain circumstances, the tyres may contact the front axle and the bodywork while the car is being driven.

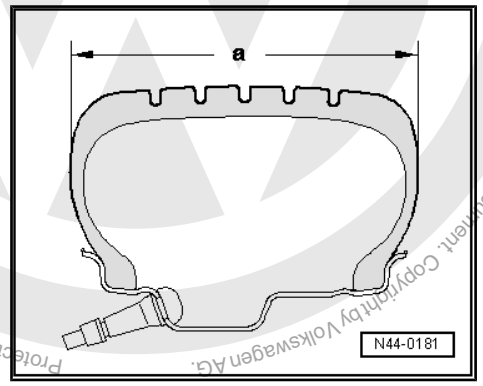

Protected by copyright. Copyright by Volkswagen AG. Copying for private or commercial purposes, in part or in whole, is not permitted unless authorised by Volkswagen AG. Volkswagen AG does not guarantee or accept any liability with respect to the correctness of information in this document.
satelettronica

22 New Beetle Cabriolet from model year 2003

General

Volkswagen vehicles are built according to the latest findings in safety engineering. To keep it that way, we recommend the use of genuine Volkswagen spare parts only. You can recognise this by the VW Audi logo and by the part number. It has been established that these parts are reliable, safe and suitable.

Despite constant appraisal of the market, we cannot assess other products on these points, even when in isolated cases they have been passed by official inspectors or have been granted official approval. Therefore, we cannot, of course, assume any liability if these products are installed.

WARNING

The products from Volkswagen genuine parts and Votex genuine accessories may differ in fitting requirements, torque specifications and so on.

Always follow the respective fitting and operating instructions.

The wheel and tyre combinations or changes listed in the vehicle tables refer exclusively to Volkswagen Genuine wheels. Approval of wheel and tyre combinations or a change to wheels from the accessories trade is not possible with the parts certificate attached here.

WARNING

The fitting instructions and torque specifications for wheels from Votex genuine accessories may differ from those intended for wheels from Volkswagen genuine parts.

Therefore, always observe the torque settings for the wheel bolts as well as the respective fitting and operating instructions.

22.1 New Beetle Cabrioet, type 1Y from model year 2003 through model year 2006

Attachment to parts certificate 1909/05

Type Approval No.: e1*2001/116*0205*00 through e1*2001/116*0205*07

Overview

Model engine output	Tyres	Tyre size	Wheel	Off-set in mm	Snow chains	Remarks
1.4l 55 kW petrol engine	Standard tyres	195/65 R 15 91T	6 J x 15 ⇒ page 271	38	Yes	General notes on winter tyres
	Modification	205/55 R 16 91H	$6^1/_2$ J x 16 ⇒ page 274	42	No	Tyre makes recommended by Volkswagen:

satelettronica

Model engine output	Tyres	Tyre size	Wheel	Off-set in mm	Snow chains	Remarks
		225/45 R 17 91V/W	7 J x 17 ⇒ page 277	38	No	♦ Summer tyres ⇒ page 372 ♦ All-season tyres ⇒ page 383 ♦ Winter tyres ⇒ page 392
	Winter tyres	195/65 R 15 91Q/T	6 J x 15 ⇒ page 271	38	Yes	
		205/55 R 16 91T	5 1/2 J x 16 ⇒ page 273	36	Yes	
1.6l 75 kW petrol engine 1.9l 74 kW diesel engine	Standard tyres	195/65 R 15 91T	6 J x 15 ⇒ page 271	38	Yes	The 225/45 R 17 tyre may be mounted on the 7 J x 17 or the 7 1/2 J x 17 rim only if the listed conditions ⇒ page 280 are fulfilled! The adhesive weights for balancing must be attached to the inner side of the rim of 6 1/2 J x 16 aluminium wheels!
	Modification	205/55 R 16 91H	6 1/2 J x 16 ⇒ page 274	42	No	
		225/45 R 17 91V/W	7 J x 17 ⇒ page 277	38	No	
		225/45 R 17 91V/W	7 1/2 J x 17 ⇒ page 279	38	No	
	Winter tyres	195/65 R 15 91Q/T	6 J x 15 ⇒ page 271	38	Yes	
		205/55 R 16 91T	5 1/2 J x 16 ⇒ page 273	36	Yes	
2.0l 85 kW petrol engine	Standard tyres	195/65 R 15 91H	6 J x 15 ⇒ page 271	38	Yes	
	Modification	205/55 R 16 91H	6 1/2 J x 16 ⇒ page 274	42	No	
		225/45 R 17 91V/W	7 J x 17 ⇒ page 277	38	No	
		225/45 R 17 91V/W	7 1/2 J x 17 ⇒ page 279	38	No	
	Winter tyres	195/65 R 15 91Q/T	6 J x 15 ⇒ page 271	38	Yes	
		205/55 R 16 91T	5 1/2 J x 16 ⇒ page 273	36	Yes	

Protected by copyright. Copying for private or commercial purposes, in part or in whole, is not permitted unless authorised by Volkswagen AG. Volkswagen AG does not guarantee or accept any liability with respect to the correctness of information in this document. Copyright by Volkswagen AG.
satelettronica

Model engine output	Tyres	Tyre size	Wheel	Off-set in mm	Snow chains	Remarks
1.8l 110 kW petrol engine	Standard tyres	195/65 R 15 91V	6 J x 15 ⇒ page 271	38	Yes	
	Modification	205/55 R 16 91V	6 1/2 J x 16 ⇒ page 274	42	No	
		225/45 R 17 91V/W	7 J x 17 ⇒ page 277	38	No	
		225/45 R 17 91V/W	7 1/2 J x 17 ⇒ page 279	38	No	
	Winter tyres	195/65 R 15 91Q/T	6 J x 15 ⇒ page 271	38	Yes	
		205/55 R 16 91T	5 1/2 J x 16 ⇒ page 273	36	Yes	

Tyre pressures can be found on the inside of the fuel tank flap or in ⇒ Maintenance ; Booklet 14.1 .

22.2 Wheel allocation for New Beetle Cabrioet, type 1Y from model year 2003 through model year 2006

Explanation of information on wheels

Wheel bolt torque settings ⇒ Running gear, axles, steering; Rep. gr. 44 ; Wheel bolt torque settings

Pitch circle diameter	100 mm
Number of wheel bolt holes:	5

22.2.1 6 J x 15

Caution

Observe the allocation of wheels and tyres to the respective engines, which are listed in the overview table ⇒ page 269 .

1J0 601 025 B, 1J0 601 025 AA - Wheel and tyre combination ⇒ page 269

For vehicles with maximum permitted axle load of 1,000 kg

Size:	6 J x 15
Wheel offset in mm:	38
Wheel load in kg:	500

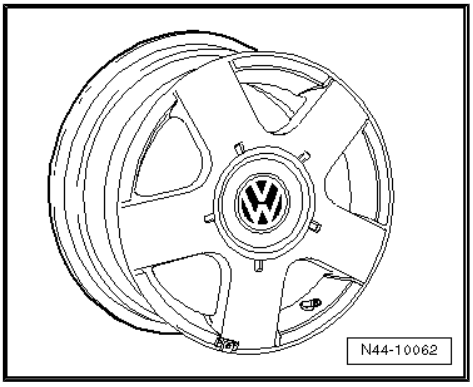

Protected by copyright. Copying for private or commercial purposes, in part or in whole is not permitted unless authorised by Volkswagen AG. Volkswagen AG does not guarantee or accept any liability with respect to the correctness of information in this document. Copyright by Volkswagen AG.
satelettronica

1J0 601 027 K - Wheel and tyre combination ⇒ page 269

Size:	6 J x 15
Wheel offset in mm:	38
Wheel load in kg:	550

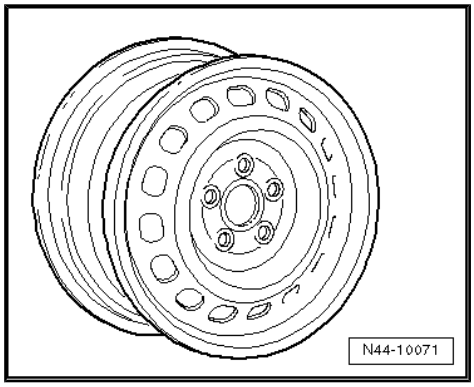

1J0 601 027 H, 1J0 601 027 Q - Wheel and tyre combination ⇒ page 269

Size:	6 J x 15
Wheel offset in mm:	38
Wheel load in kg:	550

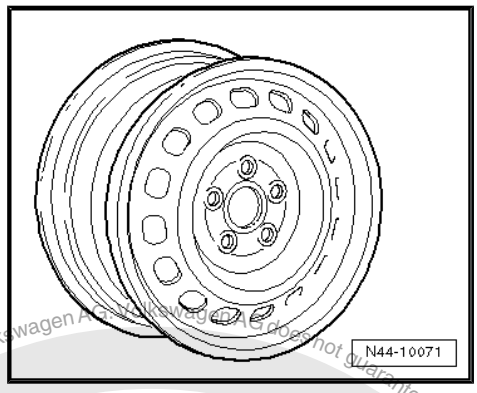

1J0 601 025 Q - Wheel and tyre combination ⇒ page 269

Size:	6 J x 15
Wheel offset in mm:	38
Wheel load in kg:	530

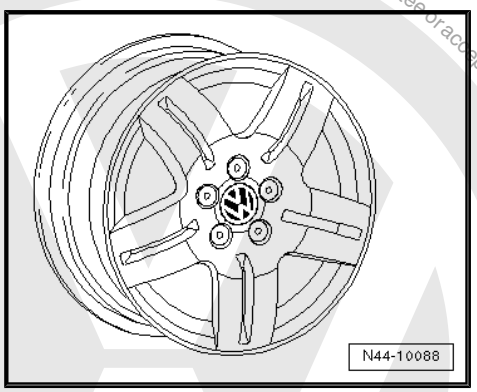

1C0 601 025 F - Wheel and tyre combination ⇒ page 269

Size:	6 J x 15
Wheel offset in mm:	38
Wheel load in kg:	550

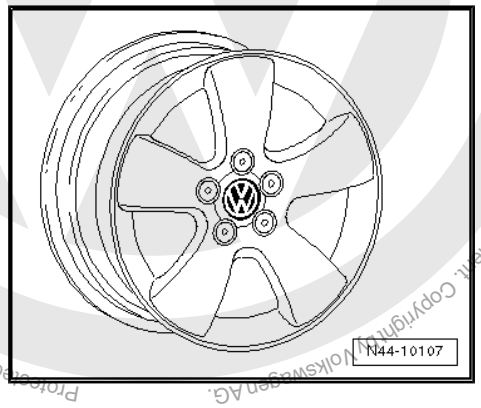

satelettronica
Protected by copyright. Copying for private or commercial purposes, in part or in whole, is not permitted unless authorised by Volkswagen AG. Volkswagen AG does not guarantee or accept any liability with respect to the correctness of information in this document. Copyright by Volkswagen AG.

1J0 601 025 P, 1J0 601 025 AL - Wheel and tyre combination
⇒ page 269

Size:	6 J x 15
Wheel offset in mm:	38
Wheel load in kg:	550

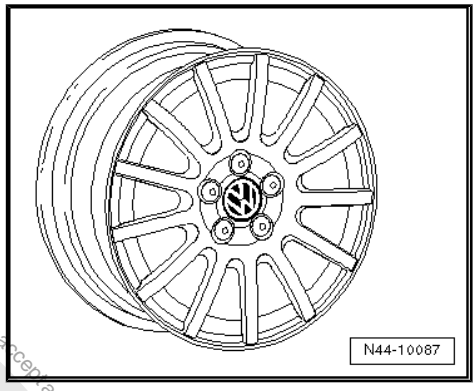

1J0 601 025 BD - Wheel and tyre combination ⇒ page 269

Size:	6 J x 15
Wheel offset in mm:	38
Wheel load in kg:	580

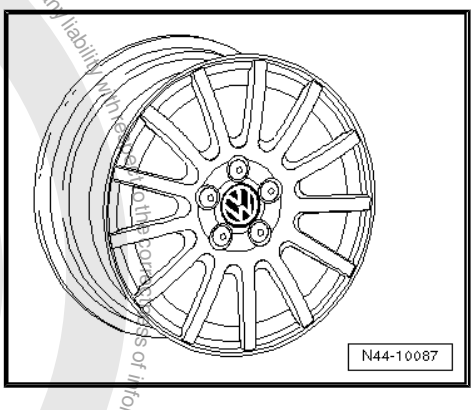

22.2.2 5 1/2 J x 16

Caution

Observe the allocation of wheels and tyres to the respective engines, which are listed in the overview table ⇒ page 269 *.*

Snow tyres

1J0 601 025 M, 1J0 601 025 AF - Wheel and tyre combination
⇒ page 270

Size:	5 1/2 J x 16
Wheel offset in mm:	36
Wheel load in kg:	550

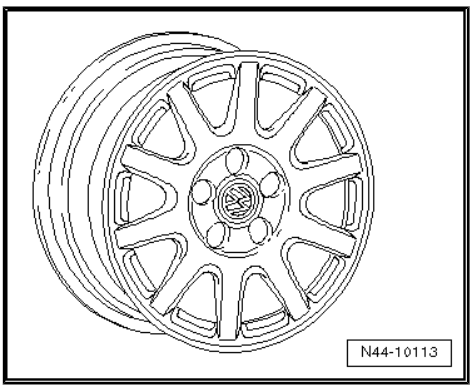

Protected by copyright. Copyright by Volkswagen AG.
Copyright by Volkswagen AG. Volkswagen AG does not guarantee or accept any liability with respect to the correctness of information in this document. Copying for private or commercial purposes, in part or in whole, is not permitted unless authorised by Volkswagen AG.
satelettronica

1J0 601 025 AP - Wheel and tyre combination ⇒ page 270

Size:	$5^1/_2$ J x 16
Wheel offset in mm:	36
Wheel load in kg:	550

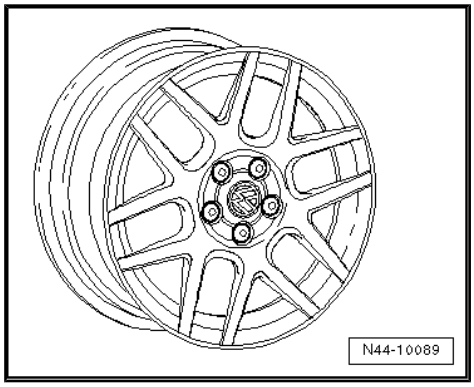

22.2.3 $6^1/_2$ J x 16

Caution

Observe the allocation of wheels and tyres to the respective engines, which are listed in the overview table ⇒ page 269 *.*

1C0 601 025 A, 1C0 601 025 D - Wheel and tyre combination ⇒ page 269

For vehicles with maximum permitted axle load of 1,000 kg

Size:	$6^1/_2$ J x 16
Wheel offset in mm:	42
Wheel load in kg:	500

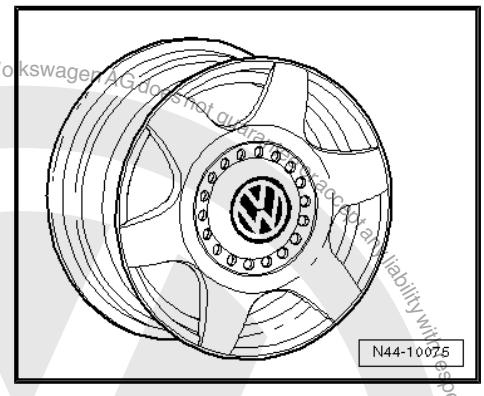

1J0 601 027 L, 1J0 601 027 R, 1J0 601 027 T- Wheel and tyre combination ⇒ page 269

Size:	$6^1/_2$ J x 16
Wheel offset in mm:	42
Wheel load in kg:	550

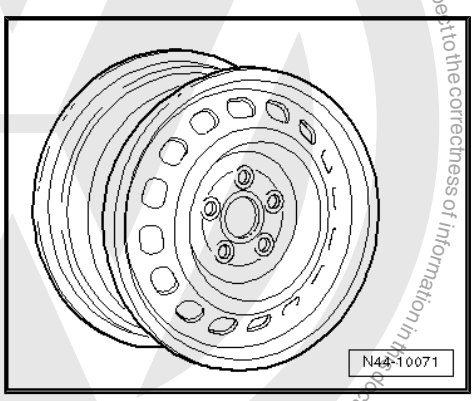

1J0 601 025 F, 1J0 601 025 AC - Wheel and tyre combination ⇒ page 269

Size:	$6^1/_2$ J x 16
Wheel offset in mm:	42
Wheel load in kg:	530

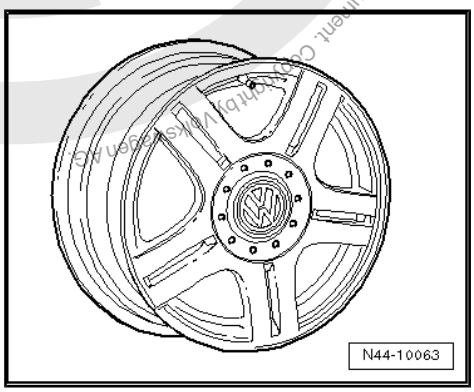

Protected by copyright. Copying for private or commercial purposes, in part or whole, is not permitted unless authorised by Volkswagen AG. Volkswagen AG does not guarantee or accept any liability with respect to the correctness of information in this document. Copyright by Volkswagen AG.

satelettronica

1J0 601 025 E, 1J0 601 025 AD - Wheel and tyre combination
⇒ page 269

Size:	$6^1/_2$ J x 16
Wheel offset in mm:	42
Wheel load in kg:	530

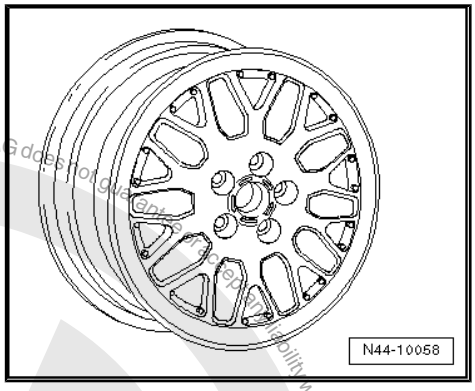

1J0 601 025 H, 1J0 601 025 AH - Wheel and tyre combination
⇒ page 269

Size:	$6^1/_2$ J x 16
Wheel offset in mm:	42
Wheel load in kg:	530

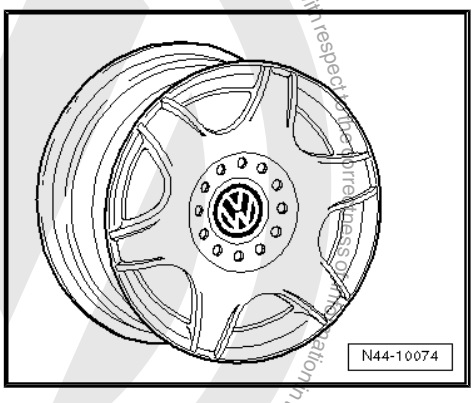

1J0 601 025 L, 1J0 601 025 AE - Wheel and tyre combination
⇒ page 269

Size:	$6^1/_2$ J x 16
Wheel offset in mm:	42
Wheel load in kg:	550

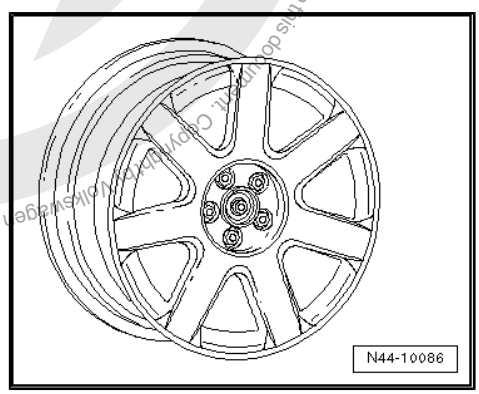

1J0 601 025 R, 1J0 601 025 AN - Wheel and tyre combination
⇒ page 269

Size:	$6^1/_2$ J x 16
Wheel offset in mm:	42
Wheel load in kg:	550

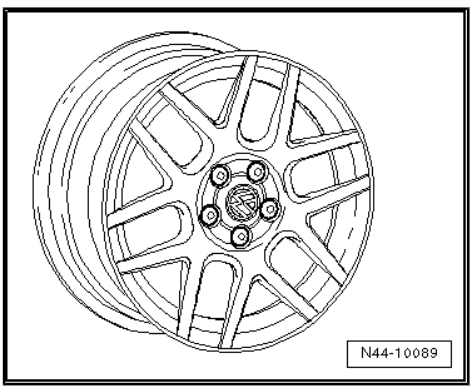

Protected by copyright. Copyright for this document belongs to Volkswagen AG. Volkswagen AG does not give a warranty as to the accuracy or completeness of this document. Copying or publishing in whole or in part, or in any other form, is not permitted unless authorised by Volkswagen AG for commercial purposes.

satelettronica

Protected by copyright. Copying for private or commercial purposes, in part or in whole, is not permitted unless authorised by Volkswagen AG. Volkswagen AG does not guarantee that the contents are free of the rights of third parties.

1J0 601 025 T, 1J0 601 025 AJ - Wheel and tyre combination
⇒ page 269

Size:	$6^1/_2$ J x 16
Wheel offset in mm:	42
Wheel load in kg:	550

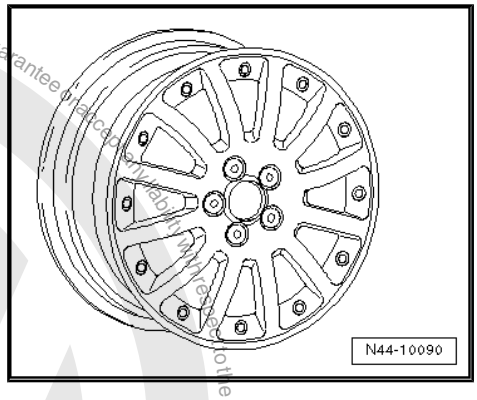

1C0 601 025 G, 1C0 601 025 AA - Wheel and tyre combination
⇒ page 269

Size:	$6^1/_2$ J x 16
Wheel offset in mm:	42
Wheel load in kg:	550

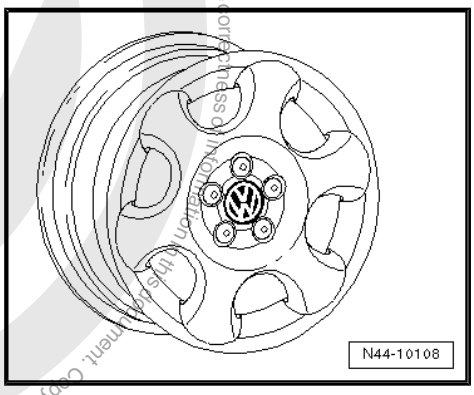

1C0 601 025 H - Wheel and tyre combination
⇒ page 269

Size:	$6^1/_2$ J x 16
Wheel offset in mm:	42
Wheel load in kg:	550

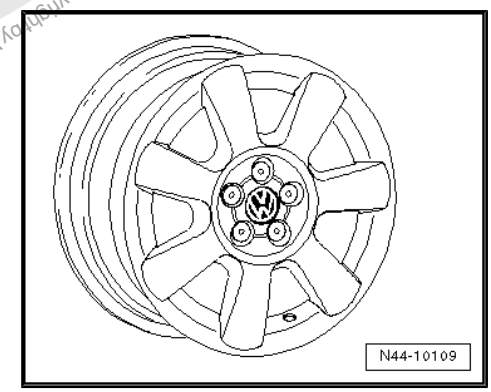

1C0 601 025 N - Wheel and tyre combination
⇒ page 269

Size:	$6^1/_2$ J x 16
Wheel offset in mm:	42
Wheel load in kg:	550

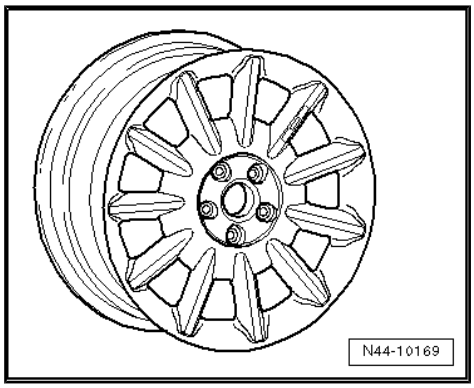

satelettronica

1C0 601 025 P - Wheel and tyre combination ⇒ page 269

Size:	$6^1/_2$ J x 16
Wheel offset in mm:	42
Wheel load in kg:	550

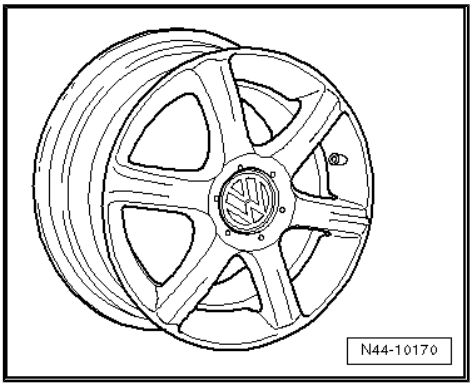

22.2.4 7 J x 17

The following wheels are permitted only if the stated conditions ⇒ page 280 are fulfilled.

> ⚠ Caution
>
> *Observe the allocation of wheels and tyres to the respective engines, which are listed in the overview table ⇒ page 269 .*

1J0 601 025 J, 1J0 601 025 S - Wheel and tyre combination ⇒ page 270

Size:	7 J x 17
Wheel offset in mm:	38
Wheel load in kg:	580

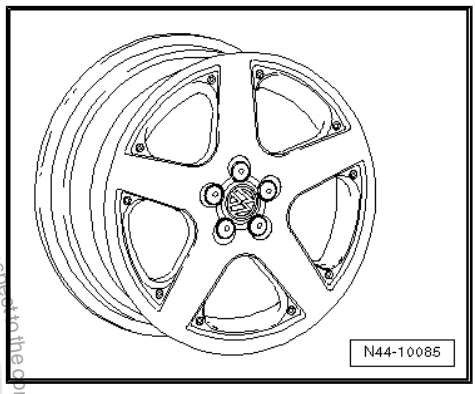

1J0 601 025 AB - Wheel and tyre combination ⇒ page 270

Size:	7 J x 17
Wheel offset in mm:	38
Wheel load in kg:	550

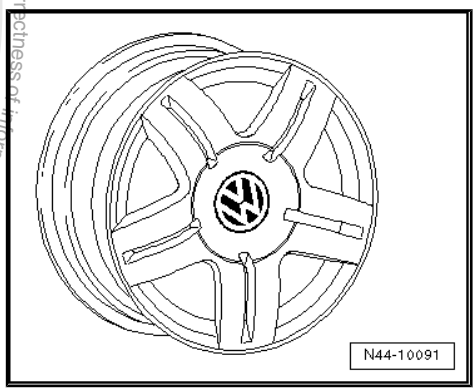

Protected by copyright. Copyright by Volkswagen AG.
Copyright by Volkswagen AG. Volkswagen AG does not guarantee or accept any liability with respect to the correctness of information in this document. Copying for private or commercial purposes, in part or in whole, is not permitted unless authorised by Volkswagen AG.
satelettronica

1C0 601 025 B, 1C0 601 025 E - Wheel and tyre combination
⇒ page 270

Size:	7 J x 17
Wheel offset in mm:	38
Wheel load in kg:	550

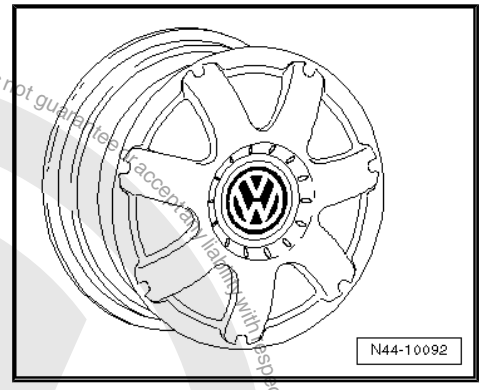

1C0 601 025 J - Wheel and tyre combination ⇒ page 270

Size:	7 J x 17
Wheel offset in mm:	38
Wheel load in kg:	550

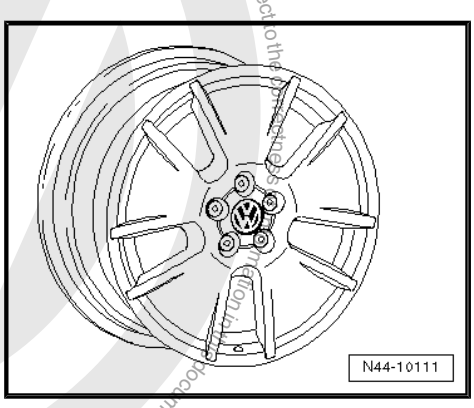

1C0 601 025 K, 1C0 601 025 Q - Wheel and tyre combination
⇒ page 270

Alloy wheels with exchangeable trim elements

Size:	7 J x 17
Wheel offset in mm:	38
Wheel load in kg:	550

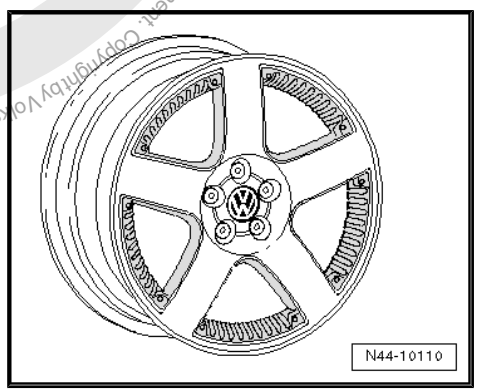

1J0 601 025 AS - Wheel and tyre combination ⇒ page 270

Size:	7 J x 17
Wheel offset in mm:	38
Wheel load in kg:	550

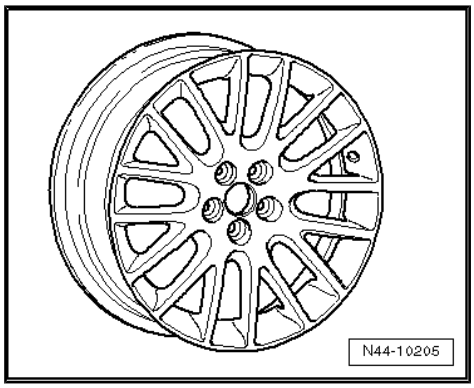

Copyright by Volkswagen AG. Protected by copyright. Copying for private or commercial purposes, in part or in whole, is not permitted unless authorised by Volkswagen AG. Volkswagen AG does not guarantee or accept any liability with respect to the correctness and completeness of this document.
satelettronica

1C0 601 025 M - Wheel and tyre combination ⇒ page 270

Size:	7 J x 17
Wheel offset in mm:	38
Wheel load in kg:	550

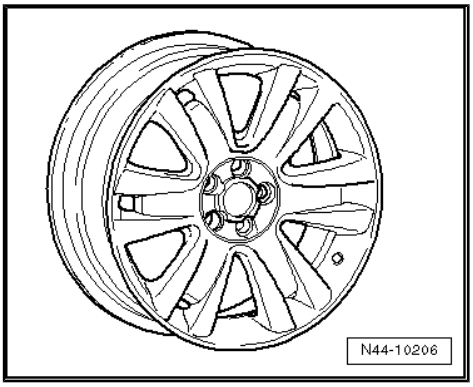

1C0 601 025 R - Wheel and tyre combination ⇒ page 270

Size:	7 J x 17
Wheel offset in mm:	38
Wheel load in kg:	550

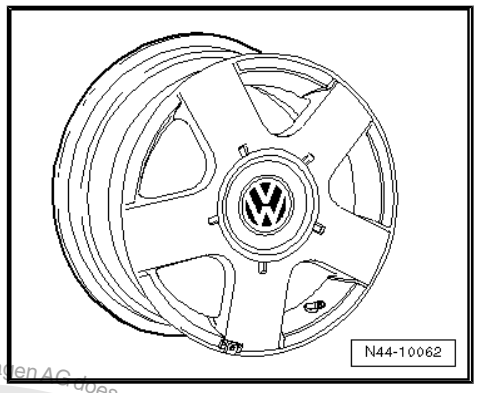

1J0 601 025 BE - Wheel and tyre combination ⇒ page 270

Size:	7 J x 17
Wheel offset in mm:	38
Wheel load in kg:	550

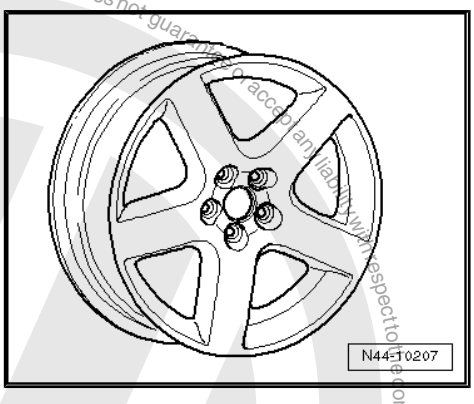

22.2.5 7 1/2 J x 17

The following wheels are permitted only if the stated conditions ⇒ page 280 **are fulfilled.**

> ⚠ **Caution**
>
> *Observe the allocation of wheels and tyres to the respective engines, which are listed in the overview table* ⇒ page 269 *.*

Protected by copyright. Copyright by Volkswagen AG. Volkswagen AG does not guarantee or accept any liability with respect to the correctness of information in this document. Copyright by Volkswagen AG. Copying for private or commercial purposes, in part or in whole, is not permitted unless authorised by Volkswagen AG.
satelettronica

1J0 601 025 BF - Wheel and tyre combination ⇒ page 270

Size:	$7^1/_2$ J x 17
Wheel offset in mm:	38
Wheel load in kg:	550

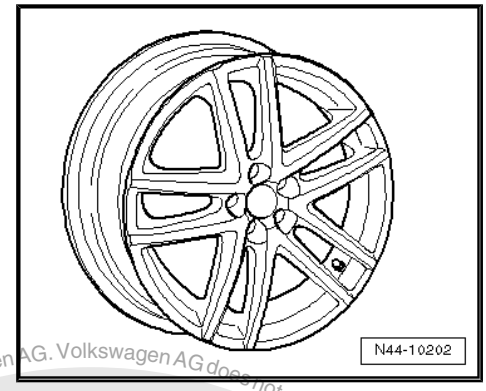

1J0 601 025 BH - Wheel and tyre combination ⇒ page 270

Size:	$7^1/_2$ J x 17
Wheel offset in mm:	38
Wheel load in kg:	560

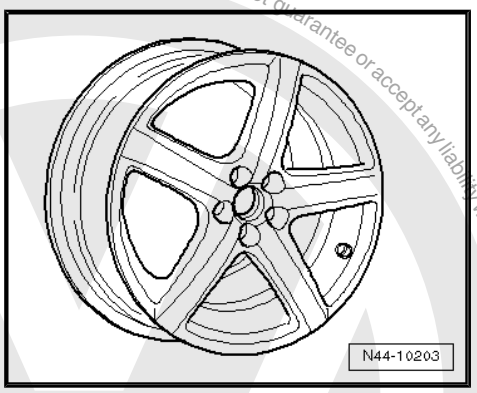

22.3 Conditions for fitting 17" wheels and tyres

17" wheels with 225/45 R 17 are possible only:

1. For vehicles from model year 2003.

2. If 17" sports running gear and a steering box with reduced steering arm travel are installed in the vehicle

Allocation of steering box PR No. to engine:	
PR No. of steering box	**Engine**
QZ 3[17)]	1.8l; 2.0l petrol engines; 1.9l diesel engines
QZ 4[17)]	Through 1.6l petrol engines

17) Replacement part numbers ⇒ Electronic parts catalogue „ETKA“

3. If tyres with a maximum width of 218 mm are used.

4. If snow chains are not used.

Maximum width of 17" tyres

If a vehicle is retrofitted with 17" tyres or if existing 17" tyres are renewed, use only tyres with a maximum width -a- which does not exceed 218 mm during use [18)].

18) The measured width of the tyre including lettering on 7 J x 17 or $7^1/_2$ J x 17 and at the specified tyre pressure.

If wider tyres are used, under certain circumstances, the tyres may contact the front axle and the bodywork while the car is being driven.

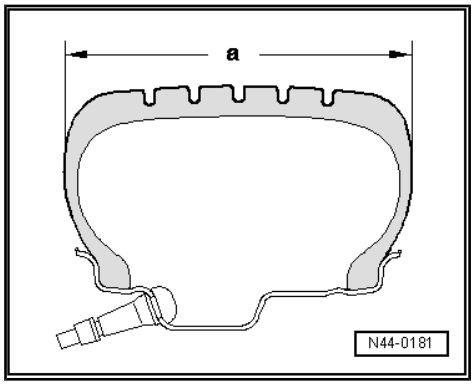

Protected by copyright. Copyright by Volkswagen AG. Copying for private or commercial purposes, in part or in whole, is not permitted unless authorised by Volkswagen AG. Volkswagen AG does not guarantee or accept any liability with respect to the correctness of information in this document.
satelettronica

23 New Beetle RSi

General

Volkswagen vehicles are built according to the latest findings in safety engineering. To keep it that way, we recommend the use of genuine Volkswagen spare parts only. You can recognise this by the VW Audi logo and by the part number. It has been established that these parts are reliable, safe and suitable.

Despite constant appraisal of the market, we cannot assess other products on these points, even when in isolated cases they have been passed by official inspectors or have been granted official approval. Therefore, we cannot, of course, assume any liability if these products are installed.

> ⚠ **WARNING**
>
> *The products from Volkswagen genuine parts and Votex genuine accessories may differ in fitting requirements, torque specifications and so on.*
>
> *Always follow the respective fitting and operating instructions.*

The wheel and tyre combinations or changes listed in the vehicle tables refer exclusively to Volkswagen Genuine wheels. Approval of wheel and tyre combinations or a change to wheels from the accessories trade is not possible with the parts certificate attached here.

> ⚠ **WARNING**
>
> *The fitting instructions and torque specifications for wheels from Votex genuine accessories may differ from those intended for wheels from Volkswagen genuine parts.*
>
> *Therefore, always observe the torque settings for the wheel bolts as well as the respective fitting and operating instructions.*

23.1 New Beetle RSi, type 9CR from model year 2001

Appendix 2 to Parts Certificate 1486/03

Type Approval No.: e1*98/14*0152*00

Overview

Model engine output	Tyres	Tyre size	Wheel	Off-set in mm	Snow chains	Remarks
3.2l 165 kW	Standard tyres	235/40 R 18 91W	9 J x 18 ⇒ page 282	10	No	General notes on winter tyres
	Modification	No changes are permissible apart from the standard wheel and tyre combinations!				Tyre makes recommended by Volkswagen:
	Winter tyres	205/55 R 16 91H	7 J x 16 ⇒ page 282	10	Yes	◆ Summer tyres ⇒ page 373 ◆ Winter tyres ⇒ page 393

Protected by copyright. Copyright by Volkswagen AG. Volkswagen AG does not guarantee or accept any liability with respect to the correctness of information in this document. Copyright by Volkswagen AG. Reproduced by Volkswagen AG. Volkswagen AG does not guarantee or accept any liability with respect to the correctness of information in this document. Copyright by Volkswagen AG.
satelettronica

23.2 Wheel allocation for New Beetle RSi, type 9CR from model year 2001

Explanation of information on wheels

Torque specification for wheel bolts ⇒ Running gear, axles, steering; Rep. gr. 44 ; Wheels and tyres; Fitting notes on removing and installing wheels

Pitch circle diameter	100 mm
Number of wheel bolt holes:	5

23.2.1 7 J x 16

Caution

Observe the allocation of wheels and tyres to the respective engines, which are listed in the overview table ⇒ page 281 .

Winter wheel

1C9 60 025 A - Wheel and tyre combination ⇒ page 281

Size:	7 J x 16
Wheel offset in mm:	10
Wheel load in kg:	520

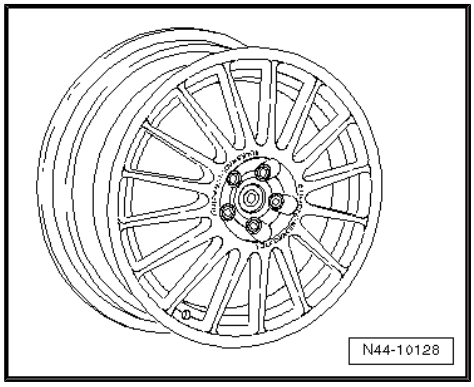

23.2.2 9 x 18

Caution

Observe the allocation of wheels and tyres to the respective engines, which are listed in the overview table ⇒ page 281 .

1C9 60 025 - Wheel and tyre combination ⇒ page 281

Size:	9 x 18
Wheel offset in mm:	10
Wheel load in kg:	520

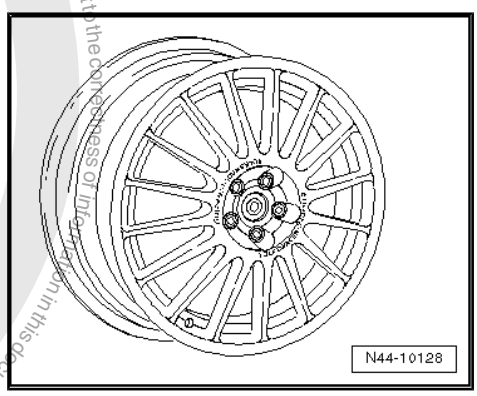

Protected by copyright. Copying for private or commercial purposes, in part, is not permitted unless authorised by Volkswagen AG. Volkswagen AG does not guarantee or accept any liability with respect to the correctness of information in this document. Copyright by Volkswagen AG.
satelettronica

24 Touran from model year 2003

General

Volkswagen vehicles are built according to the latest findings in safety engineering. To keep it that way, we recommend the use of genuine Volkswagen spare parts only. You can recognise this by the VW Audi logo and by the part number. It has been established that these parts are reliable, safe and suitable.

Despite constant appraisal of the market, we cannot assess other products on these points, even when in isolated cases they have been passed by official inspectors or have been granted official approval. Therefore, we cannot, of course, assume any liability if these products are installed.

WARNING

The products from Volkswagen genuine parts and Votex genuine accessories may differ in fitting requirements, torque specifications and so on.

Always follow the respective fitting and operating instructions.

The wheel and tyre combinations or changes listed in the vehicle tables refer exclusively to Volkswagen Genuine wheels. Approval of wheel and tyre combinations or a change to wheels from the accessories trade is not possible with the parts certificate attached here.

WARNING

The fitting instructions and torque specifications for wheels from Votex genuine accessories may differ from those intended for wheels from Volkswagen genuine parts.

Therefore, always observe the torque settings for the wheel bolts as well as the respective fitting and operating instructions.

24.1 Touran, type 1T from model year 2003 through model year 2006

Attachment to parts certificate 1902/05

Type Approval No.: e1*2001/116*0211*00 through e1*2001/116*0211*08

Overview

Model engine output	Tyres	Tyre size	Wheel	Off-set in mm	Snow chains	Remarks
1.9l 66 kW TDI diesel engines	Standard tyres	195/65 R 15 91H	6 J x 15 ⇒ page 286	47	Yes	
	Modification	195/65 R 15 91T	6 J x 15 ⇒ page 286	47	Yes	General notes on winter tyres
		195/65 R 15 91T/H	$6^1/_2$ J x 15 ⇒ page 286	50	Yes	Tyre makes recommended by Volkswagen:

Volkswagen AG. Volkswagen AG does not guarantee or accept any liability with respect to the correctness of information in this document. Copyright by Volkswagen AG.
satelettronica

Model engine output	Tyres	Tyre size	Wheel	Off-set in mm	Snow chains	Remarks
		195/65 R 15 91V	6 J x 15 ⇒ page 286	47	Yes	♦ Summer tyres ⇒ page 375 ♦ All-season tyres ⇒ page 384 ♦ Winter tyres ⇒ page 394
		205/60 R 15 91T/H/V	6 1/2 J x 15 ⇒ page 286	50	Yes	
		205/55 R 16 91H/V/W	6 J x 16 ⇒ page 287	50	No	
		205/55 R 16 91H/V/W	6 1/2 J x 16 ⇒ page 288	50	No	
		225/45 R 17 91H/V/W * ⇒ page 284	7 J x 17 ⇒ page 289	47	No	* The 225/45 R 17 91H/V/W tyre on the 7 J x 17 ET 47 rim is permitted only for vehicles with sports running gear and widened wheel housing (flaps).
	Winter tyres	195/65 R 15 91T/H	6 J x 15 ⇒ page 286	47	Yes	
		205/55 R 16 91T/H	6 J x 16 ⇒ page 287	50	Yes	
1.6l 75 kW, 85 kW petrol engine;	Standard tyres	195/65 R 15 91H	6 J x 15 ⇒ page 286	47	Yes	
1.9l 74 kW TDI diesel engines	Modification	195/65 R 15 91V	6 J x 15 ⇒ page 286	47	Yes	
1.9l 77 kW TDI diesel engine with manual gearbox;		195/65 R 15 91H	6 1/2 J x 15 ⇒ page 286	50	Yes	
2.0l 100 kW TDI diesel engine with manual gearbox;		205/60 R 15 91H/V	6 1/2 J x 15 ⇒ page 286	50	Yes	
2.0l 103 kW TDI diesel engine with manual gearbox		205/55 R 16 91H/V/W	6 J x 16 ⇒ page 287	50	No	
		205/55 R 16 91H/V/W	6 1/2 J x 16 ⇒ page 288	50	No	
		225/45 R 17 91H/V/W * ⇒ page 284	7 J x 17 ⇒ page 289	47	No	
	Winter tyres	195/65 R 15 91T/H	6 J x 15 ⇒ page 286	47	Yes	

Protected by copyright. Copying for private or commercial purposes, in part or in whole, is not permitted unless authorised by Volkswagen AG. Volkswagen AG does not guarantee or accept any liability with respect to the correctness of information in this document. Copyright by Volkswagen AG.

satelettronica

Model engine output	Tyres	Tyre size	Wheel	Off-set in mm	Snow chains	Remarks
		205/55 R 16 91T/H	6 J x 16 ⇒ page 287	50	Yes	
1.9l 77 kW TDI diesel engine with direct shift gearbox;	Standard tyres	195/65 R 15 95H	6 J x 15 ⇒ page 286	47	Yes	
2.0l 100 kW TDI diesel engine with direct shift gearbox;	Modification	195/65 R 15 95H	6 1/2 J x 15 ⇒ page 286	50	Yes	
2.0l 103 kW TDI diesel engine with direct shift gearbox;		205/60 R 15 95H/V	6 1/2 J x 15 ⇒ page 286	50	Yes	
		205/55 R 16 94V	6 J x 16 ⇒ page 287	50	No	
		205/55 R 16 94V	6 1/2 J x 16 ⇒ page 288	50	No	
		225/45 R 17 94H/V/W * ⇒ page 284	7 J x 17 ⇒ page 289	47	No	
	Winter tyres	195/65 R 15 95T/H	6 J x 15 ⇒ page 286	47	Yes	
		205/55 R 16 94T/H	6 J x 16 ⇒ page 287	50	Yes	
2.0l 110 kW petrol engine	Standard tyres	195/65 R 15 91V	6 J x 15 ⇒ page 286	47	Yes	
	Modification	195/65 R 15 91V	6 1/2 J x 15 ⇒ page 286	50	Yes	
		205/60 R 15 91V	6 1/2 J x 15 ⇒ page 286	50	Yes	
		205/55 R 16 91V/W	6 J x 16 ⇒ page 287	50	No	
		205/55 R 16 91V/W	6 1/2 J x 16 ⇒ page 288	50	No	
		225/45 R 17 91V/W * ⇒ page 284	7 J x 17 ⇒ page 289	47	No	
	Winter tyres	195/65 R 15 91T/H	6 J x 15 ⇒ page 286	47	Yes	
		205/55 R 16 91T/H	6 J x 16 ⇒ page 287	50	Yes	

Tyre pressures can be found on the inside of the fuel tank flap or in ⇒ Maintenance ; Booklet 18.1

Protected by copyright. Copying for private or commercial purposes, in part or in whole, is not permitted unless authorised by Volkswagen AG. Volkswagen AG does not guarantee or accept any liability with respect to the correctness of information in this document. Copyright by Volkswagen AG.

satelettronica

24.2 Wheel allocation for Touran, type 1T from model year 2003 through model year 2006

Explanation of information on wheels

Wheel bolt torque settings ⇒ Running gear, axles, steering; Rep. gr. 44 ; Wheel bolt torque settings .

Pitch circle diameter	112 mm
Number of wheel bolt holes:	5

24.2.1 6 J x 15

Caution

Observe the allocation of wheels and tyres to the respective engines, which are listed in the overview table ⇒ page 283 .

1K0 601,027 C - Wheel and tyre combination ⇒ page 283

Size:	6 J x 15
Wheel offset in mm:	47
Wheel load in kg:	600

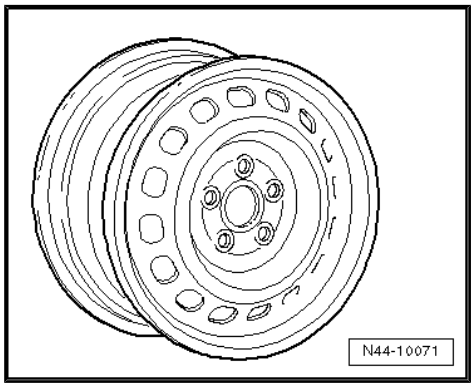

2K0 601 027 - Wheel and tyre combination ⇒ page 283

Size:	6 J x 15
Wheel offset in mm:	47
Wheel load in kg:	625

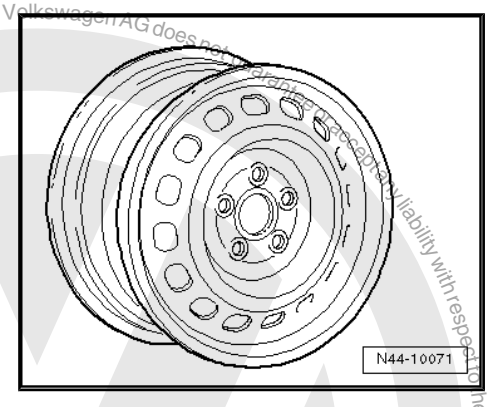

24.2.2 6 1/2 J x 15

Caution

Observe the allocation of wheels and tyres to the respective engines, which are listed in the overview table ⇒ page 283 .

Protected by copyright. Copying for private or commercial purposes, in part or in whole, is not permitted unless authorised by Volkswagen AG. Volkswagen AG does not guarantee or accept any liability with respect to the correctness of information in this document. Copyright by Volkswagen AG.
satelettronica

1K0 601 025 A - Wheel and tyre combination ⇒ page 283

Size:	$6^1/_2$ J x 15
Wheel offset in mm:	50
Wheel load in kg:	600

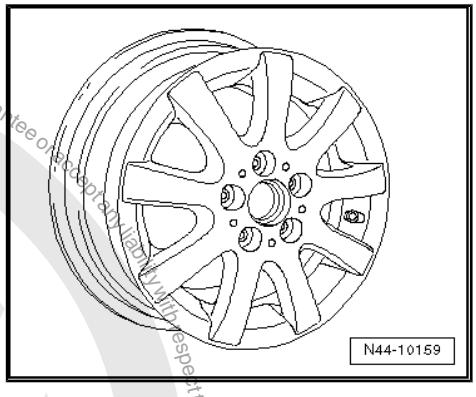

1K0 601 025 F - Wheel and tyre combination ⇒ page 283

Size:	$6^1/_2$ J x 15
Wheel offset in mm:	50
Wheel load in kg:	615

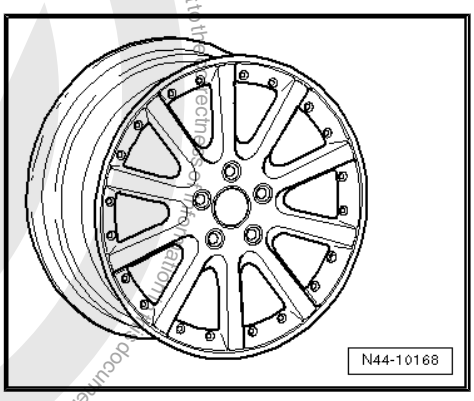

24.2.3 6 J x 16

Caution

Observe the allocation of wheels and tyres to the respective engines, which are listed in the overview table *⇒ page 283* *.*

8P0 601 027 - Wheel and tyre combination ⇒ page 284

Size:	6 J x 16
Wheel offset in mm:	50
Wheel load in kg:	600

Use the following wheel bolt caps for the wheel bolts:

- 1K0.601.173 (4 per wheel)
- 1K0.601.173 (1 per wheel)

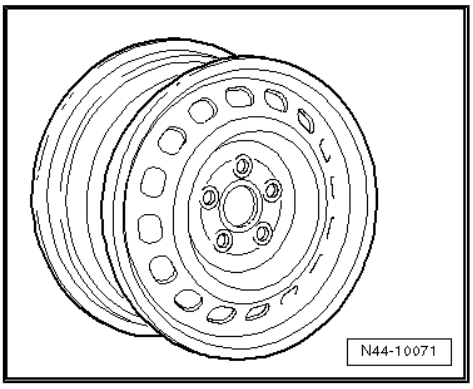

1K0 601 025 Q - Wheel and tyre combination ⇒ page 284

Size:	6 J x 16 EH2
Wheel offset in mm:	50
Wheel load in kg:	615

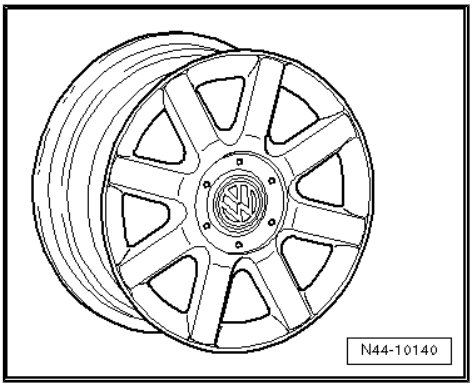

Volkswagen AG does not guarantee or accept any liability with respect to the correctness of information in this document. Copyright by Volkswagen AG.
Protected by copyright. Copying for private or commercial purposes, in part or in whole, is not permitted unless authorised by Volkswagen AG.
satelettronica

24.2.4 6$^1/_2$ J x 16

Caution

Observe the allocation of wheels and tyres to the respective engines, which are listed in the overview table ⇒ page 283 *.*

1K0 601 027 A - Wheel and tyre combination ⇒ page 284

Size:	6$^1/_2$ J x 16
Wheel offset in mm:	50
Wheel load in kg:	615

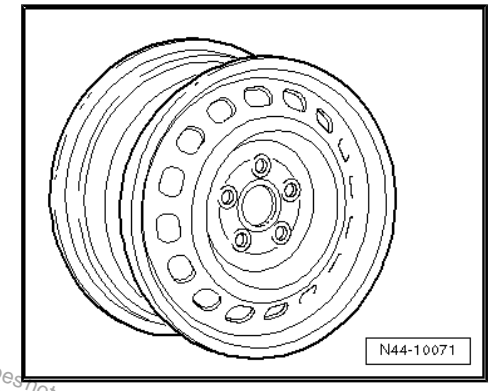

1T0 601 025 C - Wheel and tyre combination ⇒ page 284

Size:	6$^1/_2$ J x 16
Wheel offset in mm:	50
Wheel load in kg:	615

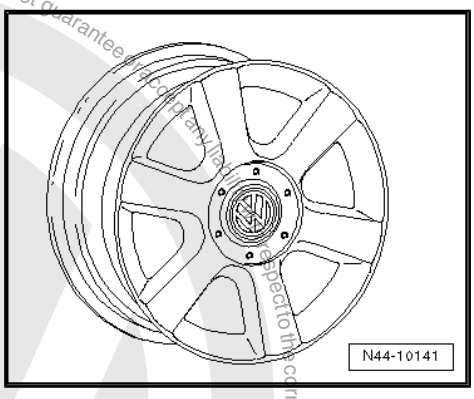

1T0 601 025 G - Wheel and tyre combination ⇒ page 284

Size:	6$^1/_2$ J x 16
Wheel offset in mm:	50
Wheel load in kg:	615

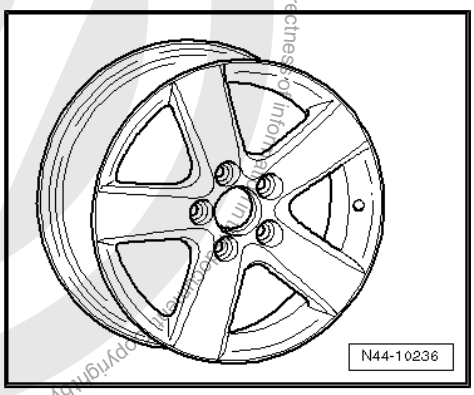

1K0 601 025 R - Wheel and tyre combination ⇒ page 284

Size:	6$^1/_2$ J x 16
Wheel offset in mm:	50
Wheel load in kg:	615

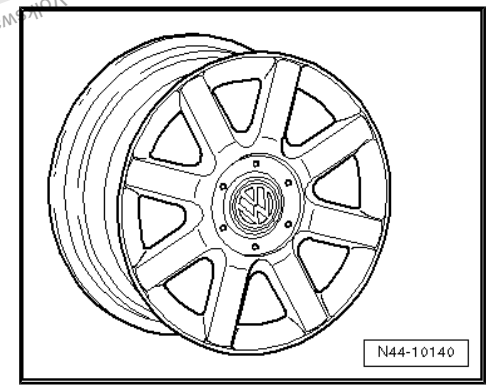

Protected by copyright. Copying for private or commercial purposes, in part or in whole, is not permitted unless authorised by Volkswagen AG. Volkswagen AG does not guarantee or accept any liability with respect to the correctness of information.
Copyright by Volkswagen AG.
satelettronica

24.2.5 7 J x 17

Caution

Observe the allocation of wheels and tyres to the respective engines, which are listed in the overview table ⇒ page 283 *.*

1T0 601 025 F - Wheel and tyre combination ⇒ page 284

Only for vehicles with sports running gear and widened wheel housings (flaps)

Size:	7 J x 17
Wheel offset in mm:	47
Wheel load in kg:	615

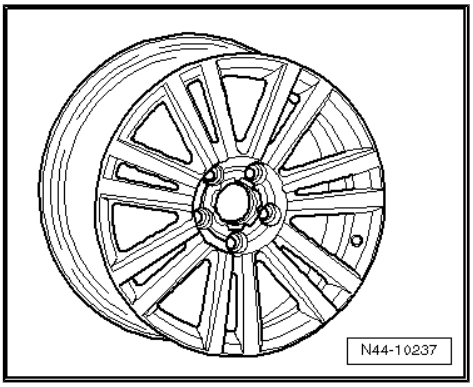

Protected by copyright. Copying for private or commercial purposes, in part or in whole, is not permitted unless authorised by Volkswagen AG. Volkswagen AG does not guarantee or accept any liability with respect to the correctness of information in this document. Copyright by Volkswagen AG.

satelettronica

25 Passat from model year 1994 through model year 1997

General

Volkswagen vehicles are built according to the latest findings in safety engineering. To keep it that way, we recommend the use of genuine Volkswagen spare parts only. You can recognise this by the VW Audi logo and by the part number. It has been established that these parts are reliable, safe and suitable.

Despite constant appraisal of the market, we cannot assess other products on these points, even when in isolated cases they have been passed by official inspectors or have been granted official approval. Therefore, we cannot, of course, assume any liability if these products are installed.

> ⚠ **WARNING**
>
> *The products from Volkswagen genuine parts and Votex genuine accessories may differ in fitting requirements, torque specifications and so on.*
>
> *Always follow the respective fitting and operating instructions.*

The wheel and tyre combinations or changes listed in the vehicle tables refer exclusively to Volkswagen Genuine wheels. Approval of wheel and tyre combinations or a change to wheels from the accessories trade is not possible with the parts certificate attached here.

> ⚠ **WARNING**
>
> *The fitting instructions and torque specifications for wheels from Votex genuine accessories may differ from those intended for wheels from Volkswagen genuine parts.*
>
> *Therefore, always observe the torque settings for the wheel bolts as well as the respective fitting and operating instructions.*

25.1 Passat, type 35I from model year 1994 through model year 1997

Appendix 2 to Parts Certificate 1481/00

General type approval No. for Passat front-wheel drive; E 657/1 Supplement 5

General type approval No. for Passat Syncro; E 960 Supplement 8

Overview

Model engine output	Tyres	Tyre size	Wheel	Off-set in mm	Snow chains	Remarks
55 kW petrol and diesel engines	Standard tyres	185/65 R 14 86T	6 J x 14 ⇒ page 292	38	Yes	205/50 R 15 86 tyres are standard on vehicles having GT equipment
	Modification	185/65 R 14 86S	6 J x 14 ⇒ page 292	38	Yes	General notes on winter tyres

Volkswagen AG. Volkswagen AG does not guarantee or accept any liability with respect to the correctness of information in this document. Copyright by Volkswagen AG. Reproduced by copyright permission for private or commercial use only.
satelettronica

Protected by copyright. Copyright by Volkswagen AG. Volkswagen AG does not guarantee or accept any liability with respect to the correctness of information in this document. Copying for private or commercial purposes, in part or in whole, is not permitted unless authorised by Volkswagen AG.

Model engine output	Tyres	Tyre size	Wheel	Off-set in mm	Snow chains	Remarks
		195/60 R 14 86S	6 J x 14 ⇒ page 292	38	Yes	Tyre makes recommended by Volkswagen: ◆ Summer tyres ⇒ page 376 ◆ Winter tyres ⇒ page 394
		205/50 R 15 86S	6 J x 15 ⇒ page 294	35	Yes	
	Winter tyres	185/65 R 14 85Q	6 J x 14 ⇒ page 292	38	Yes	
66 kW petrol and diesel engines; Saloon/Estate; 66 kW TDI Syncro	Standard tyres	185/65 R 14 86T	6 J x 14 ⇒ page 292	38	Yes	
	Modification	195/60 R 14 86T	6 J x 14 ⇒ page 292	38	Yes	
		205/50 R 15 86T	6 J x 15 ⇒ page 294	35	Yes	
	Winter tyres	185/65 R 14 85Q	6 J x 14 ⇒ page 292	38	Yes	
74 kW, 85 kW Saloon/Estate; 85 kW Syncro	Standard tyres	195/60 R 14 86H	6 J x 14 ⇒ page 292	38	Yes	
	Modification	185/65 R 14 85H	6 J x 14 ⇒ page 292	38	Yes	
		205/50 R 15 86H* ⇒ page 291	6 J x 15 ⇒ page 292	35	Yes	*Not for vehicles with heavy-duty running gear (1BB)
	Winter tyres	185/65 R 14 85Q	6 J x 14 ⇒ page 292	38	Yes	Syncro vehicles: Snow chains are permitted on the front wheels only.
81 kW TDI 81 kW Syncro Saloon/Estate;	Standard tyres	205/50 R 15 86H	6 J x 15 ⇒ page 296	35	Yes	
	Modification	No changes are permissible apart from the standard wheel and tyre combinations!				
	Winter tyres	195/55 R 15 85T	6 J x 15 ⇒ page 294	35	Yes	Vehicles with front-wheel drive
		205/50 R 15 86T	6 J x 15 ⇒ page 294	35	Yes	Syncro vehicles
110 kW Saloon/Estate	Standard tyres	205/50 R 15 86W	6 J x 15 ⇒ page 296	35	Yes	
	Modification	205/50 R 15 86V	6 J x 15 ⇒ page 296	35	Yes	
	Winter tyres	195/55 R 15 85T	6 J x 15 ⇒ page 296	35	Yes	

satelettronica

Model engine output	Tyres	Tyre size	Wheel	Off-set in mm	Snow chains	Remarks
128 kW VR6 Saloon/Estate	Standard tyres	205/50 R 15 86W	6 J x 15 ⇒ page 296	35	Yes	
	Modification	205/50 ZR 15 86W** ⇒ page 292	6 J x 15 ⇒ page 296	35	Yes	**Tyres with this double rating were offered by tyre dealers only during a transition period after which W tyres were offered.
	Winter tyres	195/55 R 15 85T	6 J x 15 ⇒ page 296	35	Yes	
135 kW Syncro Estate	Standard tyres	205/50 R 15 86W	6 J x 15 ⇒ page 296	35	Yes	Syncro vehicles: Snow chains are permitted on the front wheels only.
	Modification	205/50 ZR 15 86W** ⇒ page 292	6 J x 15 ⇒ page 296	35	Yes	
	Winter tyres	205/50 R 15 86T	6 J x 15 ⇒ page 296	35	Yes	

Tyre pressures can be found on the inside of the fuel tank flap or in ⇒ Maintenance ; Booklet 27 .

25.2 Wheel allocation for Passat, type 35I from model year 1994 through model year 1997

Explanation of information on wheels

Torque specifications for wheel bolts ⇒ Running gear, axles, steering; Rep. gr. 40 ; Repairing front suspension (basic running gear); Removing and installing wheel bearing, strut, drive shaft (basic suspension) or ⇒ Running gear, axles, steering; Rep. gr. 40 ; Repairing front suspension (plus running gear); Removing and installing wheel bearing, strut (plus running gear)

Pitch circle diameter 100 mm

25.2.1 6 J x 14

Caution

Observe the allocation of wheels and tyres to the respective engines, which are listed in the overview table ⇒ page 290 .

Reserved by copyright. Copyright by Volkswagen AG. Volkswagen AG does not guarantee or accept any liability with respect to the correctness of information in this document. Copyright by Volkswagen AG. Reserved by copyright. Copying for private or commercial purposes, in part or in whole, is not permitted unless authorised by Volkswagen AG.

satelettronica

Saloon/Estate 55 to 85 kW petrol engine front-wheel drive,

Estate Syncro 85 kW,

55 through 66 kW diesel engines, front-wheel drive

357 601 025 A/B/Q - Wheel and tyre combination ⇒ page 290

Size:	6 J x 14
Wheel offset in mm:	38
Wheel load in kg:	530
Number of wheel bolt holes:	4

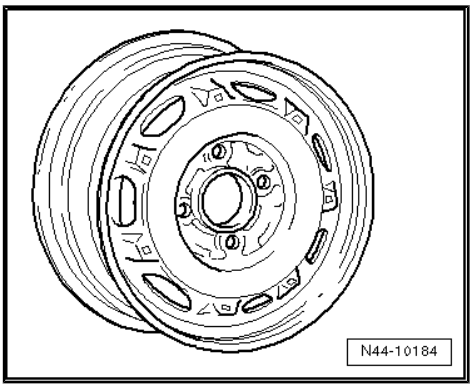

357 601 025 AB/AC - Wheel and tyre combination ⇒ page 290

Size:	6 J x 14
Wheel offset in mm:	38
Wheel load in kg:	530
Number of wheel bolt holes:	4

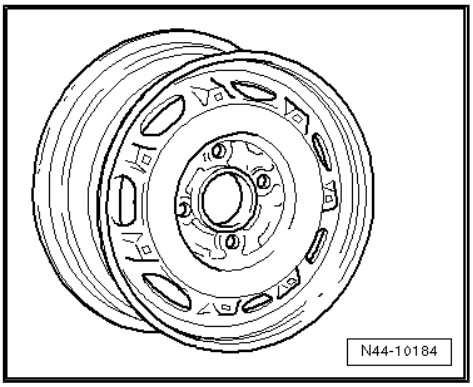

357 601 025 C - Wheel and tyre combination ⇒ page 290

Size:	6 J x 14
Wheel offset in mm:	38
Wheel load in kg:	515
Number of wheel bolt holes:	4

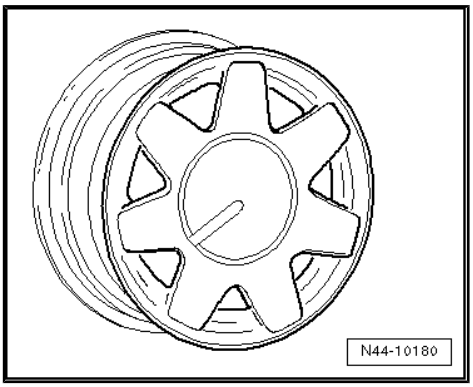

171 601 025 H - Wheel and tyre combination ⇒ page 290

Note

Not for Estate Syncro 85 kW!

Size:	6 J x 14
Wheel offset in mm:	38
Wheel load in kg:	515
Number of wheel bolt holes:	4

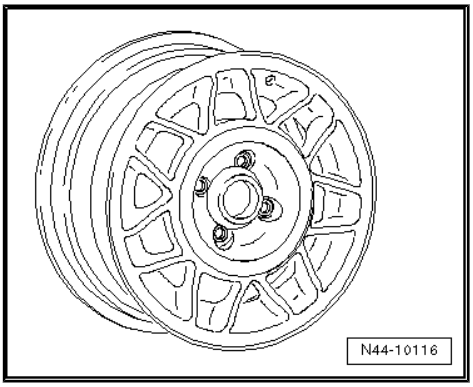

Protected by copyright. Copying for private or commercial purposes, in part or in whole, is not permitted unless authorised by Volkswagen AG. Volkswagen AG does not guarantee or accept any liability with respect to the correctness of information in this document. Copyright by Volkswagen AG.

satelettronica

Protected by copyright. Copying for private or commercial purposes, in part or in whole, is not permitted unless authorised by Volkswagen AG. Volkswagen AG does not guarantee or accept any liability with respect to the correctness of information in this document. Copyright by Volkswagen AG.

191 601 025 F - Wheel and tyre combination ⇒ page 290

Size:	6 J x 14
Wheel offset in mm:	38
Wheel load in kg:	510
Number of wheel bolt holes:	4

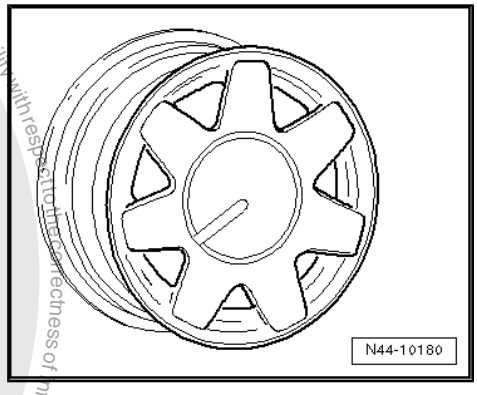

321 601 025 N - Wheel and tyre combination ⇒ page 290

Note

Not for Estate Syncro 85 kW!

Size:	6 J x 14
Wheel offset in mm:	38
Wheel load in kg:	500
Number of wheel bolt holes:	4

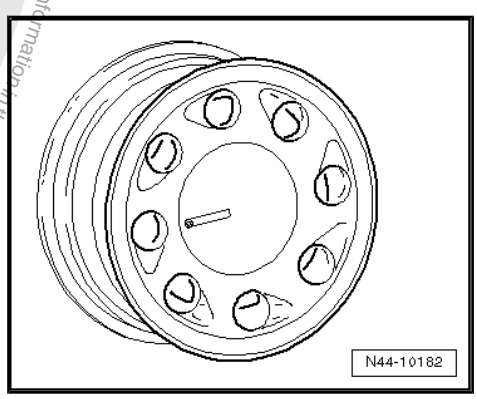

357 601 025 N - Wheel and tyre combination ⇒ page 290

Size:	6 J x 14
Wheel offset in mm:	38
Wheel load in kg:	510
Number of wheel bolt holes:	4

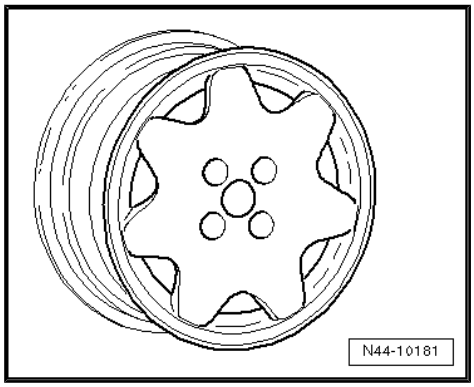

25.2.2 6 J x 15

Caution

Observe the allocation of wheels and tyres to the respective engines, which are listed in the overview table ⇒ page 290 *.*

satelettronica

Saloon/Estate 55 to 85 kW petrol engine front-wheel drive,

Estate Syncro 85 kW,

55 through 66 kW diesel engines, front-wheel drive

535 601 025 B/F - Wheel and tyre combination ⇒ page 291

Size:	6 J x 15
Wheel offset in mm:	35
Wheel load in kg:	510
Number of wheel bolt holes:	4

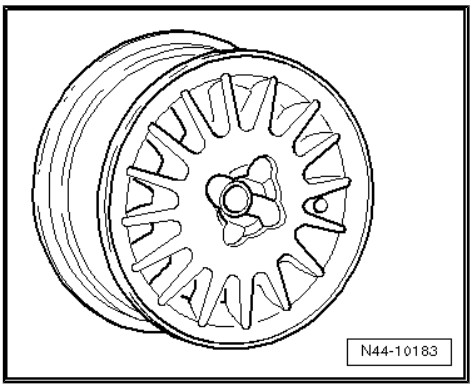

3A0 601 025 B - Wheel and tyre combination ⇒ page 291

Size:	6 J x 15
Wheel offset in mm:	35
Wheel load in kg:	530
Number of wheel bolt holes:	4

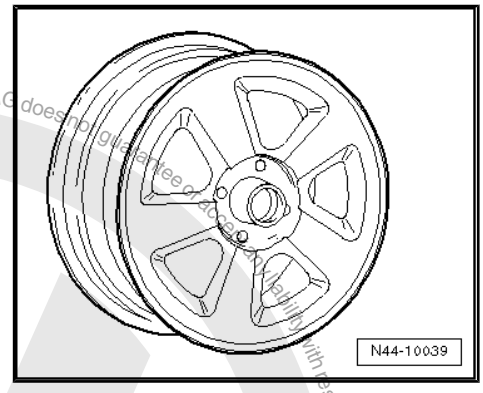

357 601 025 G - Wheel and tyre combination ⇒ page 291

Size:	6 J x 15
Wheel offset in mm:	35
Wheel load in kg:	510
Number of wheel bolt holes:	4

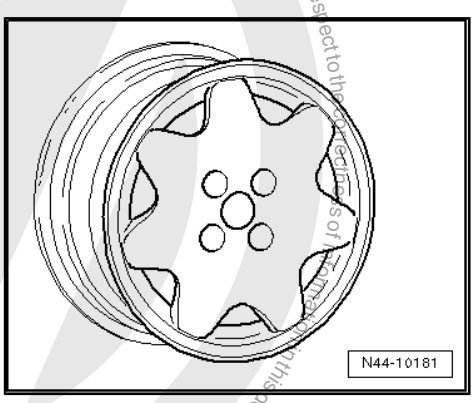

191 601 025 Q/AD - Wheel and tyre combination ⇒ page 291

Size:	6 J x 15
Wheel offset in mm:	35
Wheel load in kg:	510
Number of wheel bolt holes:	4

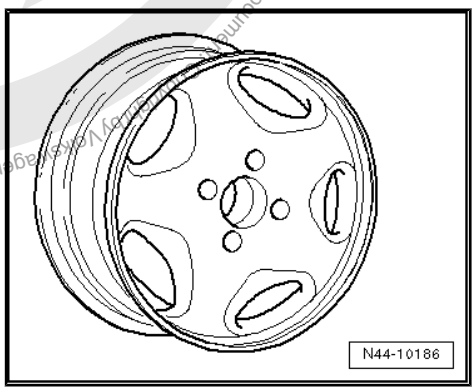

Protected by copyright. Copying for private or commercial purposes, in part or in whole, is not permitted unless authorised by Volkswagen AG. Volkswagen AG does not give a guarantee or assume liability with respect to the correctness of information in this document.
satelettronica

357 601 025 M - Wheel and tyre combination ⇒ page 291

Size:	6 J x 15
Wheel offset in mm:	35
Wheel load in kg:	530
Number of wheel bolt holes:	4

Saloon/Estate 16V and VR6 as well as 81 kW TDI Syncro, 135 kW VR6 Syncro

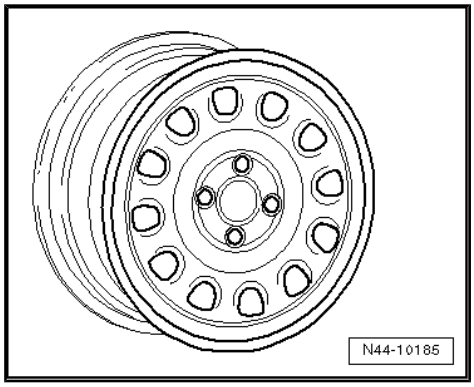

357 601 025 AA - Wheel and tyre combination ⇒ page 291

Size:	6 J x 15
Wheel offset in mm:	35
Wheel load in kg:	510
Number of wheel bolt holes:	5

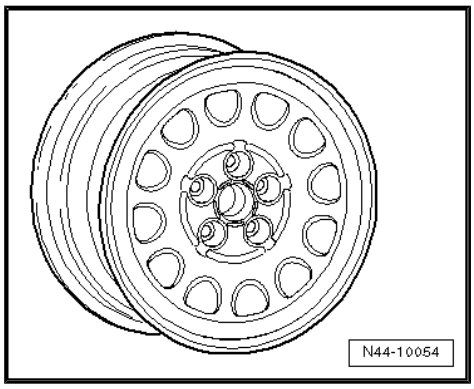

3A0 601 027 - Wheel and tyre combination ⇒ page 291

Size:	6 J x 15
Wheel offset in mm:	35
Wheel load in kg:	530
Number of wheel bolt holes:	5

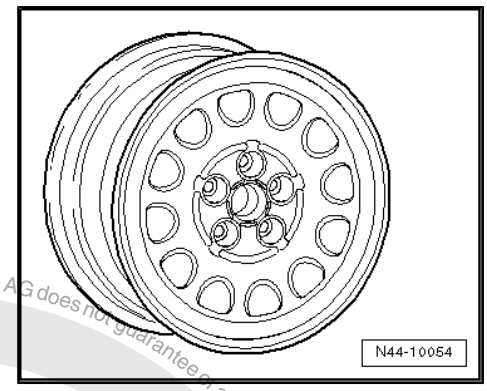

357 601 025 S - Wheel and tyre combination ⇒ page 291

Size:	6 J x 15
Wheel offset in mm:	35
Wheel load in kg:	530
Number of wheel bolt holes:	5

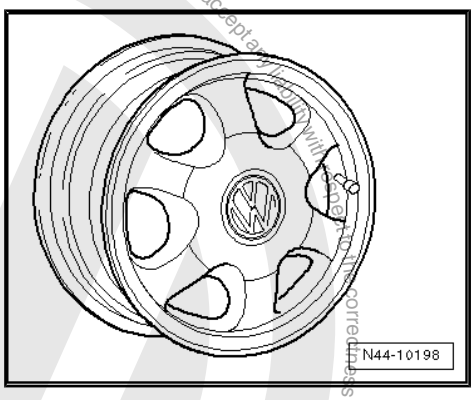

Protected by copyright. Copying for private or commercial purposes, in part or in whole, is not permitted unless authorised by Volkswagen AG. Volkswagen AG does not guarantee or accept any liability with respect to the correctness of information in this document. Copyright by Volkswagen AG.
satelettronica

357 601 025 T - Wheel and tyre combination ⇒ page 291

Size:	6 J x 15
Wheel offset in mm:	35
Wheel load in kg:	530
Number of wheel bolt holes:	5

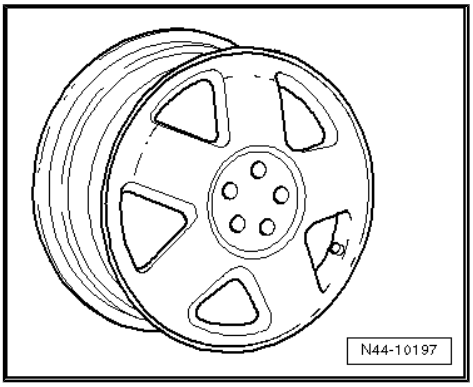

3A0 601 025 A - Wheel and tyre combination ⇒ page 291

Size:	6 J x 15
Wheel offset in mm:	35
Wheel load in kg:	530
Number of wheel bolt holes:	5

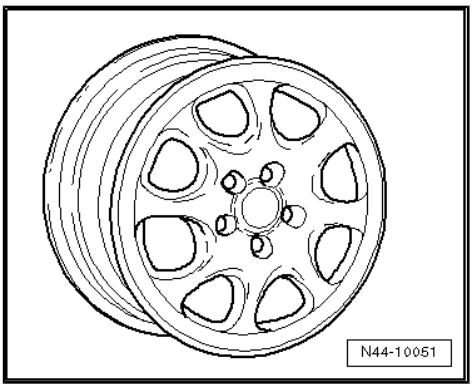

satelettronica

Reproduced by copyright. Copying for private or commercial purposes, in part or in whole, is not permitted unless authorised by Volkswagen AG. Volkswagen AG does not guarantee or accept any liability with respect to the correctness of information in this document. Copyright by Volkswagen AG

26 Passat from model year 1997 through model year 2006

General

Volkswagen vehicles are built according to the latest findings in safety engineering. To keep it that way, we recommend the use of genuine Volkswagen spare parts only. You can recognise this by the VW Audi logo and by the part number. It has been established that these parts are reliable, safe and suitable.

Despite constant appraisal of the market, we cannot assess other products on these points, even when in isolated cases they have been passed by official inspectors or have been granted official approval. Therefore, we cannot, of course, assume any liability if these products are installed.

Reproduction, copying for commercial purposes, in part or in whole, is not permitted unless authorised by Volkswagen AG. Volkswagen AG does not guarantee or accept any liability with respect to the correctness of information in this document. Copyright by Volkswagen AG.

WARNING

The products from Volkswagen genuine parts and Votex genuine accessories may differ in fitting requirements, torque specifications and so on.

Always follow the respective fitting and operating instructions.

The wheel and tyre combinations or changes listed in the vehicle tables refer exclusively to Volkswagen Genuine wheels. Approval of wheel and tyre combinations or a change to wheels from the accessories trade is not possible with the parts certificate attached here.

WARNING

The fitting instructions and torque specifications for wheels from Votex genuine accessories may differ from those intended for wheels from Volkswagen genuine parts.

Therefore, always observe the torque settings for the wheel bolts as well as the respective fitting and operating instructions.

26.1 Passat, Passat Estate, type 3B from model year 1997 through model year 2000

Appendix 2 to Parts Certificate 2523/03

Type Approval No.: e1*95/54*0043*00 through e1*95/54*0043*10

Type Approval No.: e1*98/14*D0043*11

Type Approval No.: e1*98/14*0043*12 through e1*98/14*0043*15

Overview

Model engine output	Tyres	Tyre size	Wheel	Off-set in mm	Snow chains	Remarks
1.9l 66 kW TDI Saloon/Estate	Standard tyres	195/65 R 15 91T	6 J x 15 ⇒ page 300	45	Yes	Syncro and 4Motion vehicles: Snow chains are permitted on the front wheels only.

satelettronica

Model engine output	Tyres	Tyre size	Wheel	Off-set in mm	Snow chains	Remarks
	Modification	205/60 R 15 91T	7 J x 15 ⇒ page 301	45	No	General notes on winter tyres
		205/55 R 16 91T	7 J x 16 ⇒ page 302	45	No	Tyre makes recommended by Volkswagen:
	Winter tyres	195/65 R 15 91Q/T	6 J x 15 ⇒ page 300	45	Yes	◆ Summer tyres ⇒ page 376 ◆ All-season tyres ⇒ page 384 ◆ Winter tyres ⇒ page 394
1.6l 74 kW; 1.9l 74 kW, 81 kW und 85 kW TDI Saloon/Estate	Standard tyres	195/65 R 15 91V	6 J x 15 ⇒ page 300	45	Yes	Snow tyres with „V“ rating
	Modification	195/65 R 15 91H	6 J x 15 ⇒ page 300	45	Yes	
		205/60 R 15 91H	7 J x 15 ⇒ page 301	45	No	
		205/55 R 16 91H	7 J x 16 ⇒ page 302	45	No	
	Winter tyres	195/65 R 15 91Q/T	6 J x 15 ⇒ page 300	45	Yes	
2.0l 88 kW; 1.8l 92 kW, 110 kW; 2.3l 110 kW, 125 kW; 2.5l 110 kW with front-wheel drive, Saloon/Estate	Standard tyres	195/65 R 15 91V	6 J x 15 ⇒ page 300	45	Yes	
	Modification	205/60 R 15 91V	7 J x 15 ⇒ page 301	45	No	
		205/55 R 16 91V	7 J x 16 ⇒ page 302	45	No	
	Winter tyres	195/65 R 15 91Q/T/H/V	6 J x 15 ⇒ page 300	45	Yes	
2.5l 110 kW Syncro/4Motion Saloon/Estate 2.8l 142 kW front-wheel drive and Syncro/4Motion Saloon/Estate	Standard tyres	195/65 R 15 91W	6 J x 15 ⇒ page 300	45	Yes	
	Modification	205/60 R 15 91W	7 J x 15 ⇒ page 301	45	No	
		205/55 R 16 91W	7 J x 16 ⇒ page 302	45	No	
	Winter tyres	195/65 R 15 91Q/T/H/V	6 J x 15 ⇒ page 300	45	Yes	

Tyre pressures can be found on the inside of the fuel tank flap or in ⇒ Maintenance ; Booklet 36 .

Reproduced by copyright. Copying for private or commercial purposes, in part or in whole, is not permitted unless authorised by Volkswagen AG. Volkswagen AG does not guarantee or accept any liability with respect to the correctness of information in this document. Copyright by Volkswagen AG.

satelettronica

Protected by copyright. Copyright by Volkswagen AG. Volkswagen AG does not guarantee or accept any liability with respect to the correctness of information in this document. Copyright by Volkswagen AG. Reproduction in whole or in part is prohibited unless authorised by Volkswagen AG for commercial purposes, in part or in whole.

26.2 Wheel allocation for Passat, Passat Estate, type 3B from model year 1997 through model year 2000

Explanation of information on wheels

Torque specifications for wheel bolts ⇒ Running gear, axles, steering - front and four-wheel drive; Rep. gr. 44 ; Fitting wheels and tyres; Fitting wheels

Pitch circle diameter	112 mm
Number of wheel bolt holes:	5

26.2.1 6 J x 15

Caution

Observe the allocation of wheels and tyres to the respective engines, which are listed in the overview table ⇒ page 298 .

Saloon/Estate with front-wheel drive saloon Syncro/4Motion, Estate Syncro/4Motion to maximum permitted axle load of 1180 kg

8D0 601 025 D - Wheel and tyre combination ⇒ page 298

Size:	6 J x 15
Wheel offset in mm:	45
Wheel load in kg:	590

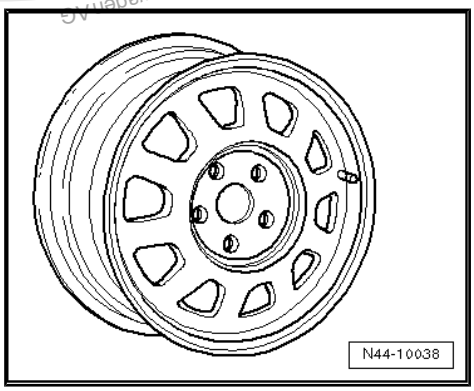

All saloons and estates with front-wheel drive; all Syncro or 4Motion saloons, all Syncro or 4Motion estates

8D0 601 027 - Wheel and tyre combination ⇒ page 298

Size:	6 J x 15
Wheel offset in mm:	45
Wheel load in kg:	605

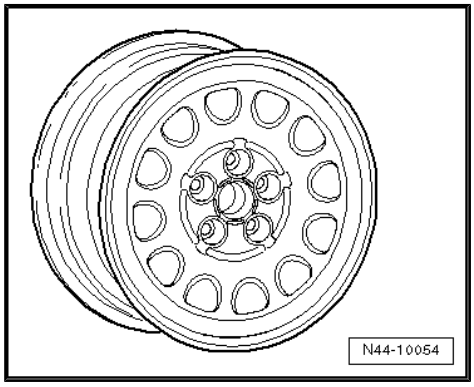

satelettronica

4A0 601 025 J - Wheel and tyre combination ⇒ page 298

Size:	6 J x 15
Wheel offset in mm:	45
Wheel load in kg:	605

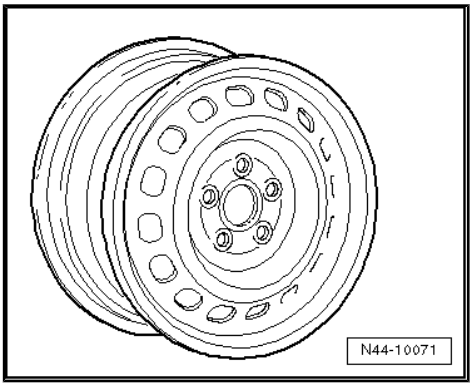

4B0 601 027 - Wheel and tyre combination ⇒ page 298

Size:	6 J x 15
Wheel offset in mm:	45
Wheel load in kg:	605

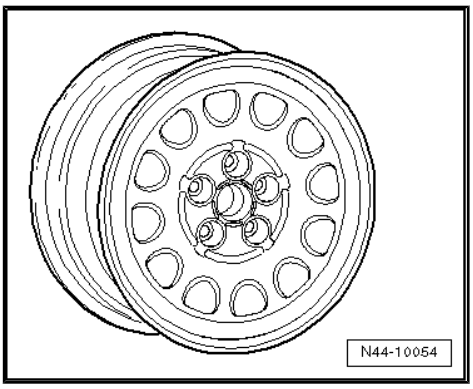

4B0 601 025 J, 4B0 601 025 N - Wheel and tyre combination ⇒ page 298

Size:	6 J x 15
Wheel offset in mm:	45
Wheel load in kg:	605

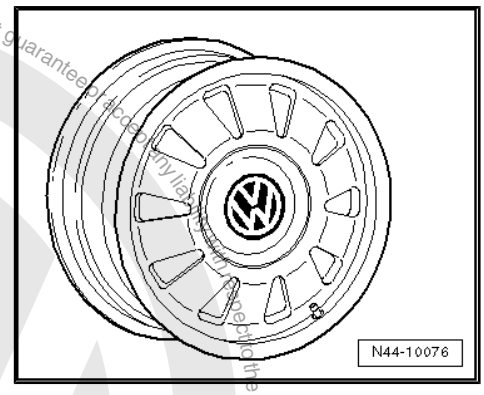

26.2.2 7 J x 15

Caution

Observe the allocation of wheels and tyres to the respective engines, which are listed in the overview table ⇒ page 298 *.*

Protected by copyright. Copying for private or commercial purposes, in part or in whole, is not permitted unless authorised by Volkswagen AG. Volkswagen AG does not guarantee or accept any liability with respect to the correctness of information in this document. Copyright by Volkswagen AG.
satelettronica

Saloons and estates with front-wheel drive to maximum permitted axle load of 1,150 kg,

Saloon Syncro/4Motion, Estate Syncro/4Motion to maximum axle load 1150 kg

3B0 601 025 A/C - Wheel and tyre combination ⇒ page 299

Size:	7 J x 15
Wheel offset in mm:	45
Wheel load in kg:	575

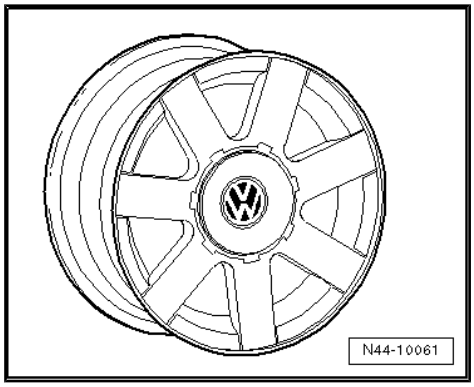

Saloons and estates with front-wheel drive to maximum permitted axle load of 1,160 kg,

Saloon Syncro/4Motion, Estate Syncro/4Motion to maximum axle load 1,160 kg

3B0 601 027 - Wheel and tyre combination ⇒ page 299

Size:	7 J x 15
Wheel offset in mm:	45
Wheel load in kg:	580

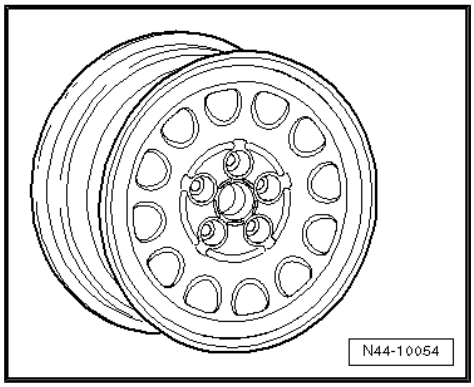

26.2.3 7 J x 16

Caution

Observe the allocation of wheels and tyres to the respective engines, which are listed in the overview table ⇒ page 298 *.*

Saloons and estates with front-wheel drive to maximum permitted axle load of 1,160 kg,

Saloon Syncro/4Motion, Estate Syncro/4Motion to maximum axle load 1,160 kg

3B0 601 027 A - Wheel and tyre combination ⇒ page 299

Size:	7 J x 16
Wheel offset in mm:	45
Wheel load in kg:	580

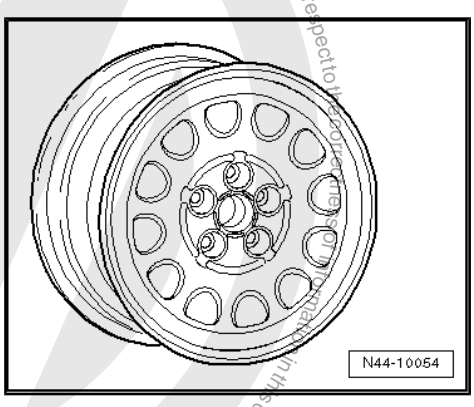

Saloon/Estate with front-wheel drive saloon Syncro/4Motion, Estate Syncro/4Motion to maximum permitted axle load of 1,190 kg

Protected by copyright. Copying for private or commercial purposes, in part or in whole, is not permitted unless authorised by Volkswagen AG. Volkswagen AG does not guarantee or accept any liability with respect to the correctness of information in this document. Copyright by Volkswagen AG.
satelettronica

3B0 601 025 G - Wheel and tyre combination ⇒ page 299

Size:	7 J x 16
Wheel offset in mm:	45
Wheel load in kg:	595

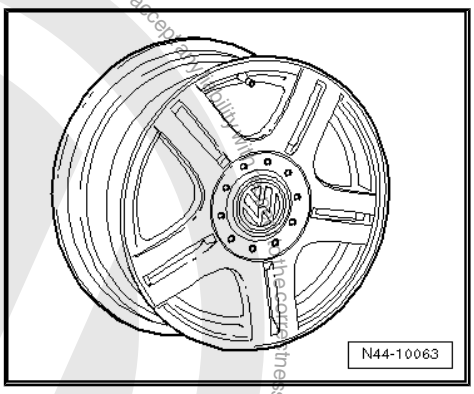

26.3 Passat, Passat Estate, type 3BG from model year 2001 through model year 2006

Appendix 2 to Parts Certificate 2523/03

Type Approval No. e1*98/14*0157*00 bis e1*98/14*0157*09

Type Approval No.: e1*2001/116*0157*10 through e1*2001/116*0157*12

Overview

Model engine output	Tyres	Tyre size	Wheel	Off-set in mm	Snow chains	Remarks
1.6l 75 kW Saloon/Estate; 1.9l 74 kW TDI Saloon/Estate	Standard tyres	195/65 R 15 91V	6 J x 15 ⇒ page 305	37	Yes	4Motion vehicles: Snow chains are permitted on the front wheels only.
2.0l 85 kW Saloon/Estate, front-wheel drive and 4Motion	Modification	195/65 R 15 91H	6 J x 15 ⇒ page 305	37	Yes	*17" wheels and tyres: This combination of wheels and tyres is not permitted for vehicles with front-wheel drive and sports running gear.
		205/60 R 15 91H	7 J x 15 ⇒ page 306	37	No	
		205/55 R 16 91H	7 J x 16 ⇒ page 307	37	No	
		225/45 R 17 91H* ⇒ page 303	7 J x 17* ⇒ page 303 ⇒ page 309	37	No	Snow tyres with „V“ rating
	Winter tyres	195/65 R 15 91Q/T	6 J x 15 ⇒ page 305	37/45	Yes	
1.8l 110 kW Saloon/Estate; 1.9l 96 kW TDI Saloon/Estate, front-wheel drive or 4Motion;	Standard tyres	195/65 R 15 91V	6 J x 15 ⇒ page 305	37	Yes	General notes on winter tyres
2.0l 96 kW Saloon/Estate, front-wheel drive	Modification	205/60 R 15 91V	7 J x 15 ⇒ page 306	37	No	Tyre makes recommended by Volkswagen:

Protected by copyright. Copyright by Volkswagen AG. Volkswagen AG does not warrant or accept any liability with respect to the correctness of information in this document. Copyright by Volkswagen AG. Volkswagen AG does not authorise the use of this document for commercial purposes, in part or in whole, is not permitted unless authorised by Volkswagen AG.
satelettronica

Model engine output	Tyres	Tyre size	Wheel	Off-set in mm	Snow chains	Remarks
2.0l 100 kW TDI Saloon/Estate, front-wheel drive		205/55 R 16 91V	7 J x 16 ⇒ page 307	37	No	◆ Summer tyres ⇒ page 376 ◆ All-season tyres ⇒ page 384 ◆ Winter tyres ⇒ page 394
		225/45 R 17 91V* ⇒ page 303	7 J x 17* ⇒ page 303	37	No	
	Winter tyres	195/65 R 15 91Q/T	6 J x 15 ⇒ page 305	37/45	Yes	
V5 2.3l 125 kW Saloon/Estate, front-wheel drive and 4Motion	Standard tyres	205/55 R 16 91V	7 J x 16 ⇒ page 308	37	No	
	Modification	205/55 R 16 91W	7 J x 16 ⇒ page 308	37	No	
		225/45 R 17 91V/W/Y* ⇒ page 303	7 J x 17* ⇒ page 303	37	No	
	Winter tyres	205/55 R 16 91T/V	6 J x 16 ⇒ page 306	40	Yes	
V6 TDI 2.5l 110 kW Saloon/Estate, front-wheel drive and 4Motion	Standard tyres	205/55 R 16 91W	7 J x 16 ⇒ page 308	37	No	
V6 TDI 2.5l 120 kW Saloon/Estate, front-wheel drive;	Modification	225/45 R 17 91W* ⇒ page 303	7 J x 17* ⇒ page 303	37	No	
V6 TDI 2.5l 132 kW Saloon/Estate, 4Motion; V6 2.8l 140 kW Saloon/Estate, front-wheel drive; V6 2.8l 142 kW Saloon/Estate, 4Motion;	Winter tyres	205/55 R 16 91T/V	6 J x 16 ⇒ page 306	40	Yes	

Tyre pressures can be found on the inside of the fuel tank flap or in ⇒ Maintenance ; Booklet 36 .

26.4 Wheel allocation for Passat, Passat Estate, type 3BG from model year 2001 through model year 2006

Explanation of information on wheels

Protected by copyright. Copying for private or commercial purposes, in part or in whole, is not permitted unless authorised by Volkswagen AG. Volkswagen AG does not guarantee or accept any liability with respect to the correctness of information in this document. Copyright by Volkswagen AG.
satelettronica

Torque specifications for wheel bolts ⇒ Running gear, axles, steering - front and four-wheel drive; Rep. gr. 44 ; Fitting wheels and tyres; Fitting wheels

Pitch circle diameter	112 mm
Number of wheel bolt holes:	5

26.4.1 6 J x 15

Caution

Observe the allocation of wheels and tyres to the respective engines, which are listed in the overview table ⇒ page 303 .

Saloon/Estate with front-wheel drive through 110 kW petrol engine and 96 kW and 100 kW diesel engines,

Saloon/Estate 4Motion through 110 kW petrol engine and 96 kW diesel engine

4B0 601 027 - Wheel and tyre combination ⇒ page 303

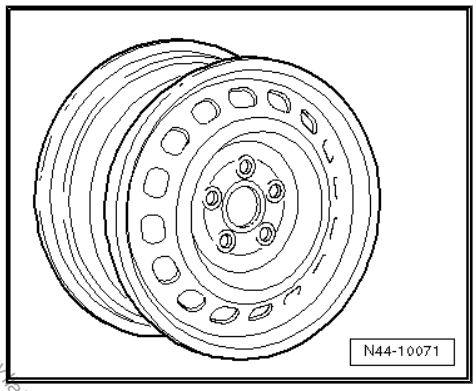

Note

Only permissible with winter tyres.

Size:	6 J x 15
Wheel offset in mm:	45
Wheel load in kg:	605

3B0 601 027 D - Wheel and tyre combination ⇒ page 303

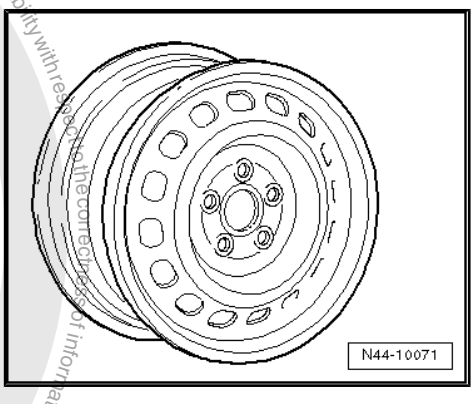

Size:	6 J x 15
Wheel offset in mm:	37
Wheel load in kg:	605

4B0 601 025 J, 4B0 601 025 N - Wheel and tyre combination ⇒ page 303

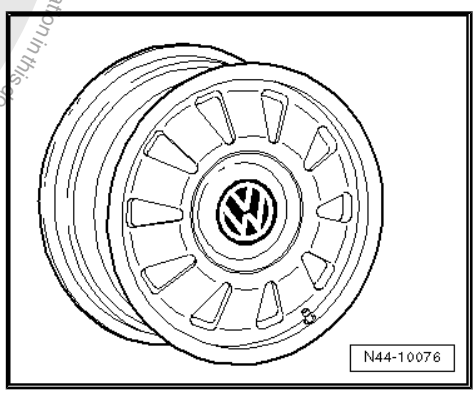

Size:	6 J x 15
Wheel offset in mm:	45
Wheel load in kg:	605

Protected by copyright. Copying for private or commercial purposes, in part or in whole, is not permitted unless authorised by Volkswagen AG. Volkswagen AG does not guarantee or accept any liability with respect to the correctness of information in this document. Copyright by Volkswagen AG.
satelettronica

26.4.2 7 J x 15

Caution

Observe the allocation of wheels and tyres to the respective engines, which are listed in the overview table ⇒ page 303 *.*

Saloon/Estate with front-wheel drive through 110 kW petrol engine and 96 kW and 100 kW diesel engines,

Saloon/Estate 4Motion through 110 kW petrol engine and 96 kW diesel engine

3B0 601 027 E - Wheel and tyre combination ⇒ page 303

Size:	7 J x 15
Wheel offset in mm:	37
Wheel load in kg:	600

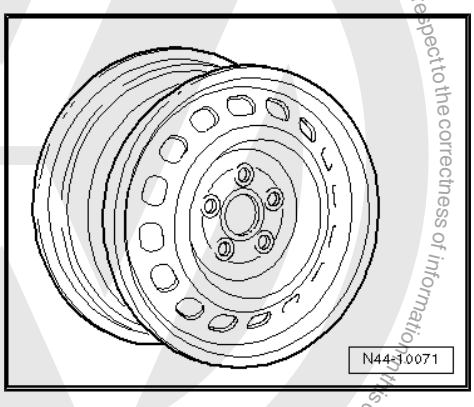

3B0 601 025 K - Wheel and tyre combination ⇒ page 303

Size:	7 J x 15
Wheel offset in mm:	37
Wheel load in kg:	590

Only for vehicles for export to the USA

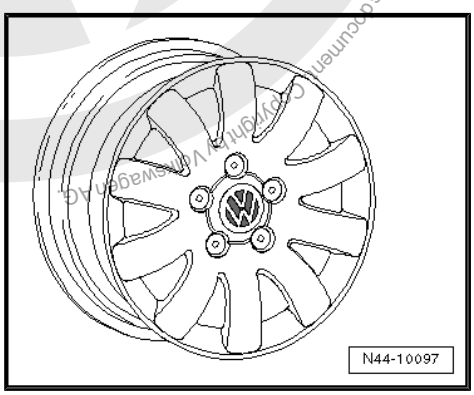

3B0 601 025 S- Wheel and tyre combination ⇒ page 303

Size:	7 J x 15
Wheel offset in mm:	37
Wheel load in kg:	600

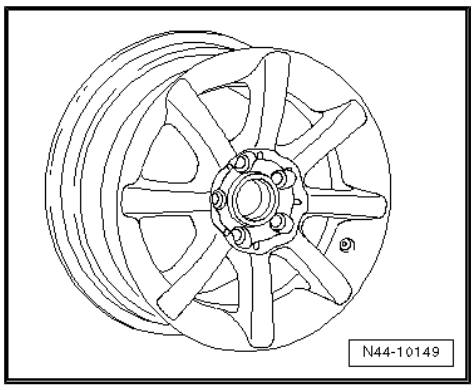

26.4.3 6 J x 16

Caution

Observe the allocation of wheels and tyres to the respective engines, which are listed in the overview table ⇒ page 303 *.*

Protected by copyright. Copying for private or commercial purposes, in part or in whole, is not permitted unless authorised by Volkswagen AG. Volkswagen AG does not guarantee or accept any liability with respect to the correctness of information in this document. Copyright by Volkswagen AG.
satelettronica

Saloon/Estate with front-wheel drive V6 TDI, V5, V6 petrol engine,

Saloon/Estate, 4Motion V6 TDI, V5, V6 petrol engines

Snow tyres

8D0 601 025 P - Wheel and tyre combination ⇒ page 304

Size:	6 J x 16
Wheel offset in mm:	40
Wheel load in kg:	615

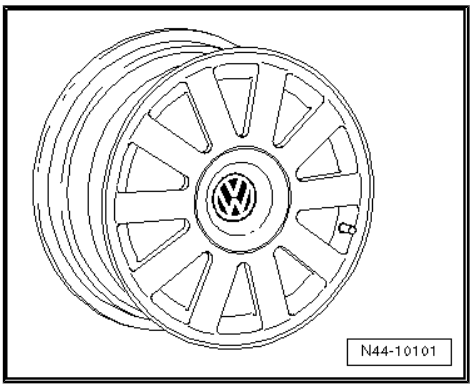

8D0 601 027 A - Wheel and tyre combination ⇒ page 304

Size:	6 J x 16
Wheel offset in mm:	40
Wheel load in kg:	615

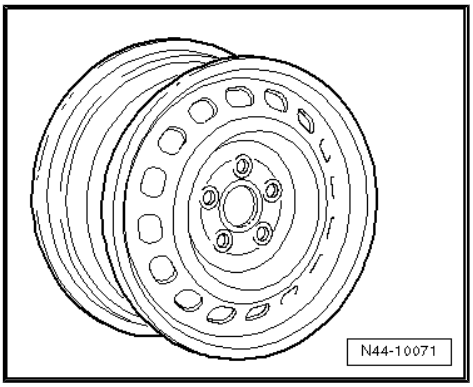

26.4.4 7 J x 16

Caution

Observe the allocation of wheels and tyres to the respective engines, which are listed in the overview table *⇒ page 303* *.*

Saloon/Estate with front-wheel drive through 110 kW petrol engine and 96 kW and 100 kW diesel engines,

Saloon/Estate 4Motion through 110 kW petrol engine and 96 kW diesel engine

3B0 601 027 F - Wheel and tyre combination ⇒ page 303

Size:	7 J x 16
Wheel offset in mm:	37
Wheel load in kg:	605

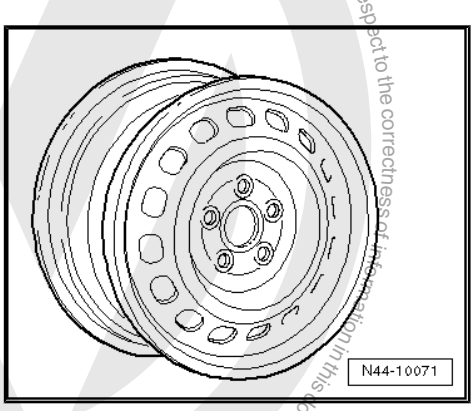

Protected by copyright. Copyright by Volkswagen AG.
Copying for private or commercial purposes, in part or in whole, is not permitted unless authorised by Volkswagen AG. Volkswagen AG does not guarantee or accept any liability with respect to the correctness of information in this document.
satelettronica

3B0 601 025 L - Wheel and tyre combination ⇒ page 303

Size:	7 J x 16
Wheel offset in mm:	37
Wheel load in kg:	605

Saloon/Estate with front-wheel drive V6 TDI, V5, V6 petrol engines

Saloon/Estate, 4Motion V6 TDI, V5, V6 petrol engines

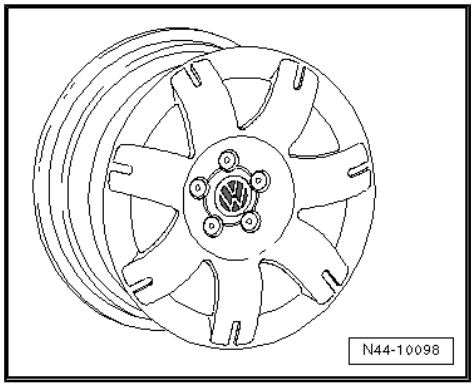

3B0 601 027 F - Wheel and tyre combination ⇒ page 304

Size:	7 J x 16
Wheel offset in mm:	37
Wheel load in kg:	605

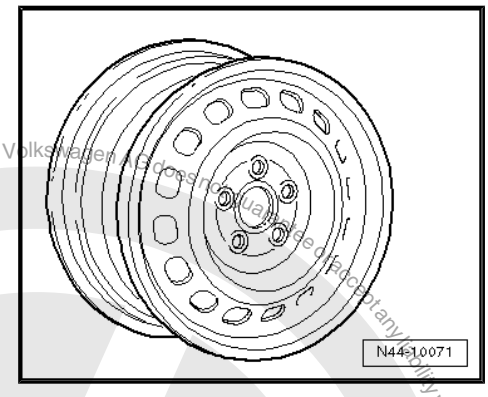

3B0 601 025 L - Wheel and tyre combination ⇒ page 304

Size:	7 J x 16
Wheel offset in mm:	37
Wheel load in kg:	605

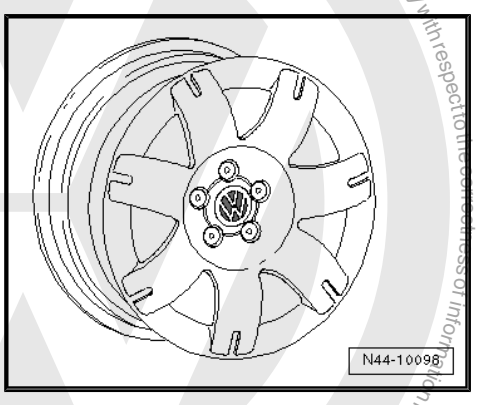

3B0 601 025 AD - Wheel and tyre combination ⇒ page 304

Size:	7 J x 16
Wheel offset in mm:	37
Wheel load in kg:	620

Only for vehicles for export to the USA

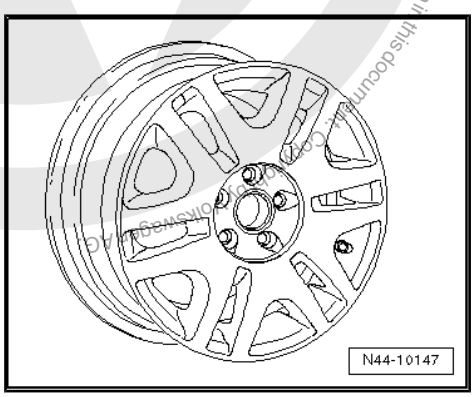

Protected by copyright. Copying for private or commercial purposes, in part or in whole, is not permitted unless authorised by Volkswagen AG. Volkswagen AG does not guarantee or accept any liability with respect to the correctness of information in this document. Copyright by Volkswagen AG.

satelettronica

3B0 601 025 T - Wheel and tyre combination ⇒ page 303

Size:	7 J x 16
Wheel offset in mm:	37
Wheel load in kg:	620

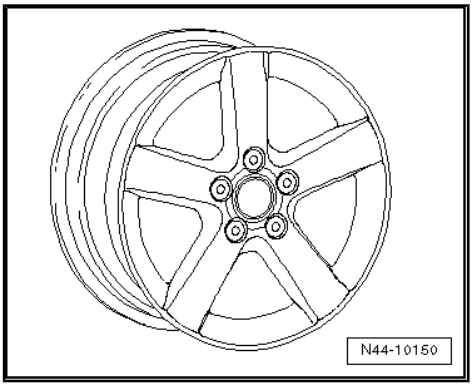

3B0 601 025 AA - Wheel and tyre combination ⇒ page 303

Size:	7 J x 16
Wheel offset in mm:	37
Wheel load in kg:	620

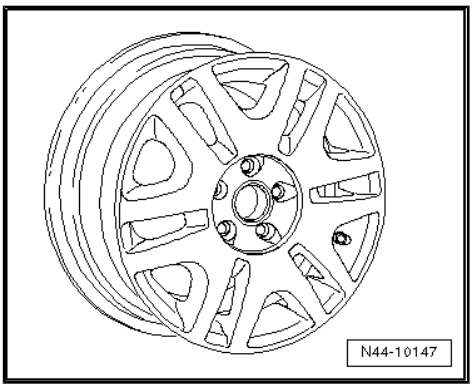

26.4.5 7 J x 17

Note

Not permitted for vehicles with front-wheel drive in conjunction with sports running gear.

Caution

Observe the allocation of wheels and tyres to the respective engines, which are listed in the overview table ***⇒ page 303*** ***.***

Saloon/Estate with front-wheel drive through 110 kW petrol engine and 96 kW and 100 kW diesel engines,

Saloon/Estate 4Motion through 110 kW petrol engine and 96 kW diesel engine,

Saloon/Estate with front-wheel drive V6 TDI, V5, V6 petrol engine,

Saloon/Estate, 4Motion V6 TDI, V5, V6 petrol engines

3B0 601 025 M - Wheel and tyre combination ⇒ page 303

Size:	7 J x 17
Wheel offset in mm:	37
Wheel load in kg:	605

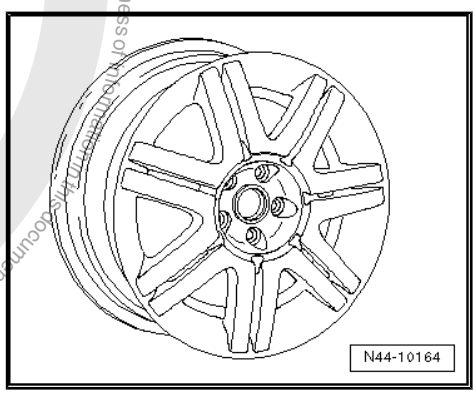

Protected by copyright. Copying for private or commercial purposes, in part or whole, is not permitted unless authorised by Volkswagen AG. Volkswagen AG does not guarantee or accept any liability with respect to the correctness of information in this document. Copyright by Volkswagen AG.
satelettronica

3B0 601 025 P - Wheel and tyre combination ⇒ page 303

Size:	7 J x 17
Wheel offset in mm:	37
Wheel load in kg:	605

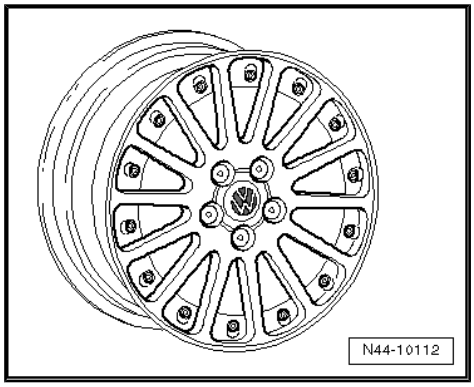

26.5 Passat W8 4Motion, type 3BS model year 2002 through model year 2005

Appendix 2 to Parts Certificate 2523/03

Type Approval No.: e1*98/14*0173*00 through e1*98/14*0173*02

Type Approval No.: e1*2001/116*0173*03 through e1*2001/116*0173*04

Overview

Model engine output	Tyres	Tyre size	Wheel	Off-set in mm	Snow chains	Remarks
4.0l 202 kW Saloon/Estate	Standard tyres	225/45 R 17 91Y	$7^1/_2$ J x 17 ⇒ page 312	45	No	Snow chains: Only the listed snow chains are approved! Article No. ⇒ page 311
	Modification	No changes are permissible apart from the standard wheel and tyre combinations!				* 4Motion vehicles: Snow chains are permitted on the front wheels only.
	Winter tyres	205/50 R 17 93T/H/V* ⇒ page 310	6 J x 17 ⇒ page 311	42	Yes	General notes on winter tyres Tyre makes recommended by Volkswagen: ◆ Summer tyres ⇒ page 377 ◆ All-season tyres ⇒ page 384 ◆ Winter tyres ⇒ page 395 Snow tyres with „V“ rating

Tyre pressures can be found on the inside of the fuel tank flap or in ⇒ Maintenance ; Booklet 36 .

Protected by copyright. Copying for private or commercial purposes, in part or in whole, is not permitted unless authorised by Volkswagen AG. Volkswagen AG does not guarantee or accept any liability with respect to the correctness of information in this document. Copyright by Volkswagen AG.

satelettronica

Approved snow chains, Passat W8

The snow chains listed below are permitted only in conjunction with the wheel and tyre combinations listed next to them!

Chain manufacturer Article No.	Accessories part No.	Tyre size	Wheel	Part No.
Ottinger 100 956	-	205/50 R 17 93T/ H/V ⇒ page 310	6 J x 17 ET 42	3B7 601 025 C
Rud 46022	Z 091 589			

26.6 Wheel allocation for Passat W8 4Motion, type 3BS model year 2002 through model year 2005

Explanation of information on wheels

Torque specifications for wheel bolts ⇒ Running gear, axles, steering - front and four-wheel drive; Rep. gr. 44 ; Fitting wheels and tyres; Fitting wheels

Pitch circle diameter	112 mm
Number of wheel bolt holes:	5

26.6.1 7 J x 16

Caution

Observe the allocation of wheels and tyres to the respective engines, which are listed in the overview table *⇒ page 310* *.*

Only for vehicles for export to the USA

3B7 601 025 F - Wheel and tyre combination

Size:	7 J x 16
Wheel offset in mm:	45
Wheel load in kg:	630

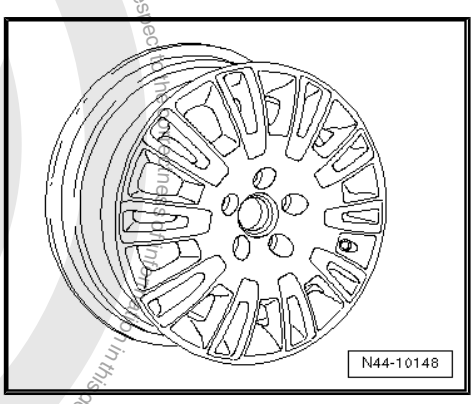

26.6.2 6 J x 17

Caution

Observe the allocation of wheels and tyres to the respective engines, which are listed in the overview table *⇒ page 310* *.*

Copyright by Volkswagen AG. Volkswagen AG does not guarantee or accept any liability with respect to the correctness of information in this document. Copyright by Volkswagen AG. Reproduced by copyright. Copying for private or commercial purposes, in part or in whole, is not permitted unless authorised by Volkswagen AG.
satelettronica

For winter tyres

3B7 601 025 C - Wheel and tyre combination ⇒ page 310

Size:	6 J x 17
Wheel offset in mm:	42
Wheel load in kg:	620

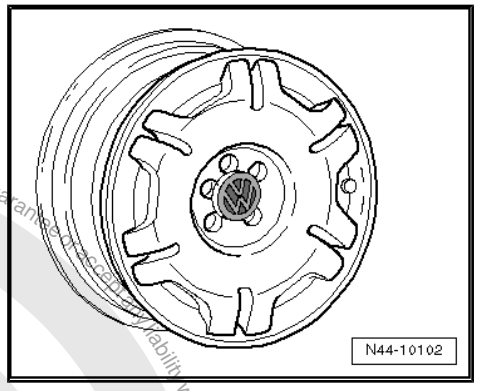

26.6.3 7 1/2 J x 17

> ⚠ **Caution**
>
> *Observe the allocation of wheels and tyres to the respective engines, which are listed in the overview table* ⇒ page 310 *.*

3B7 601 025 A - Wheel and tyre combination ⇒ page 310

Size:	7 1/2 J x 17
Wheel offset in mm:	45
Wheel load in kg:	630

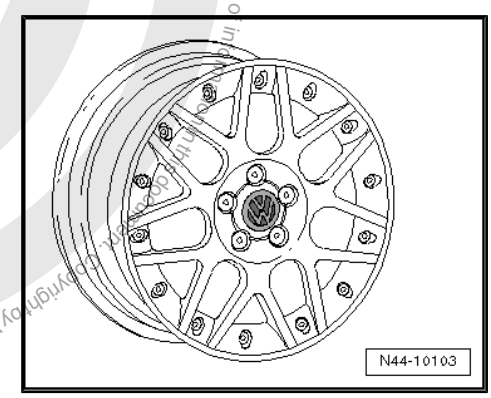

3B7 601 025 D - Wheel and tyre combination ⇒ page 310

Size:	7 1/2 J x 17
Wheel offset in mm:	45
Wheel load in kg:	660

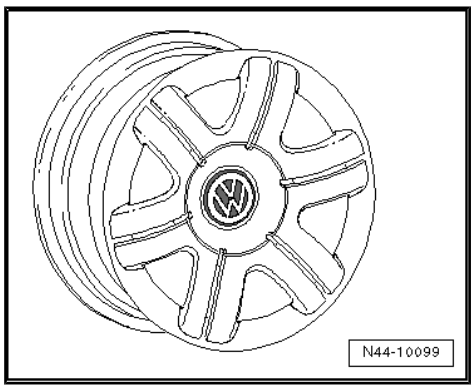

26.7 Passat Protect, type 3BL model year 2002 through model year 2005

Appendix 2 to Parts Certificate 2523/03

Protected by copyright. Copying for private or commercial purposes, in part or in whole, is not permitted unless authorised by Volkswagen AG. Volkswagen AG does not guarantee or accept any liability with respect to the correctness of information. Copyright by Volkswagen AG.

satelettronica

Type approval No.: e1*98/14PD0162*00 through e1*98/14PD0162*03

Type approval No.: e1*2001/116*0162*04

Overview

Model engine output	Tyres	Tyre size	Wheel	Off-set in mm	Snow chains	Remarks
2.8l 142 kW 1.9l 96 kW TDI	Standard tyres	205/55 R 16 94W reinforced/XL	7 J x 16 ⇒ page 314	45	No	Snow chains: Only the listed snow chains are approved! Article No. ⇒ page 313
	Modification	215/55 R 16 97Y reinforced/XL	7 J x 16 ⇒ page 314	45	No	* 4Motion vehicles: Snow chains are permitted on the front wheels only.
	Winter tyres	205/55 R 16 94T/H/V* ⇒ page 313 reinforced/XL	6 J x 16 ⇒ page 314	45	Yes	General notes on winter tyres
4.0l 202 kW	Standard tyres	215/55 R 16 97Y reinforced/XL	7 J x 16 ⇒ page 314	45	No	Tyre makes recommended by Volkswagen: ◆ Summer tyres ⇒ page 377 ◆ Winter tyres ⇒ page 395
	Modification	No changes are permissible apart from the standard wheel and tyre combinations!				
	Winter tyres	205/55 R 16 94T/H/V* ⇒ page 313 reinforced/XL	6 J x 16 ⇒ page 314	45	Yes	Snow tyres with „V“ rating

Tyre pressures can be found on the inside of the fuel tank flap or in ⇒ Maintenance ; Booklet 36 .

Approved snow chains, Passat Protect

The snow chains listed below are permitted only in conjunction with the wheel and tyre combinations listed next to them!

Chain manufacturer Article No.	Accessories part No.	Tyre size	Wheel	Part No.
Rud	000 091 386 K	205/55 R 16 94T/H/V* ⇒ page 313 reinforced/XL	6 J x 16 ET 45	3B7 601 025 B

26.8 Wheel allocation, Passat Protect, type 3BL model year 2002 through model year 2005

Explanation of information on wheels

Wheel bolt torque settings ⇒ Running gear, axles, steering - Protect; Rep. gr. 44 ; Wheel bolt torque settings

Pitch circle diameter	112 mm
Number of wheel bolt holes:	5

Protected by copyright. Copying for private or commercial purposes, in part or in whole, is not permitted unless authorised by Volkswagen AG. Volkswagen AG does not guarantee or accept any liability with respect to the correctness of information in this document. Copyright by Volkswagen AG.

satelettronica

26.8.1 6 J x 16

Caution

Observe the allocation of wheels and tyres to the respective engines, which are listed in the overview table ⇒ page 313 .

For winter tyres

Only for vehicles to maximum permissible axle load of 1320 kg

3B7 601 025 B - Wheel and tyre combination ⇒ page 313

Size:	6 J x 16
Wheel offset in mm:	45
Wheel load in kg:	660

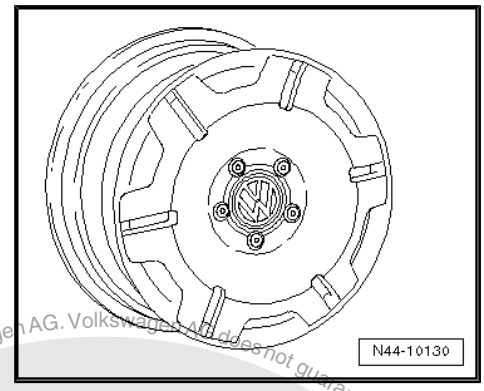

26.8.2 7 J x 16

Caution

Observe the allocation of wheels and tyres to the respective engines, which are listed in the overview table ⇒ page 313 .

4B0 601 025 T - Wheel and tyre combination ⇒ page 313

Size:	7 J x 16
Wheel offset in mm:	45
Wheel load in kg:	670

Only for vehicles to maximum permissible axle load of 1320 kg

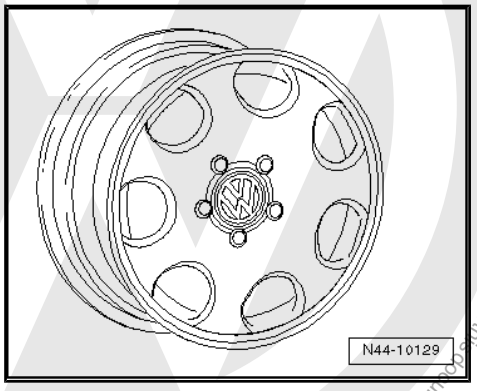

3B7 601 025 - Wheel and tyre combination ⇒ page 313

Size:	7 J x 16
Wheel offset in mm:	45
Wheel load in kg:	660

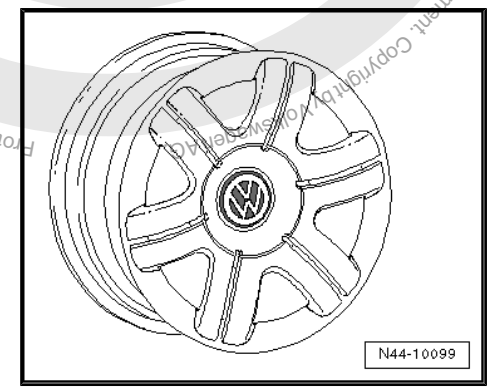

Protected by copyright. Copying for private or commercial purposes, in part or in whole, is not permitted unless authorised by Volkswagen AG. Volkswagen AG does not guarantee or accept any liability with respect to the correctness of information in this document. Copyright by Volkswagen AG.
satelettronica

27 Passat from model year 2006

General

Volkswagen vehicles are built according to the latest findings in safety engineering. To keep it that way, we recommend the use of genuine Volkswagen spare parts only. You can recognise this by the VW Audi logo and by the part number. It has been established that these parts are reliable, safe and suitable.

Despite constant appraisal of the market, we cannot assess other products on these points, even when in isolated cases they have been passed by official inspectors or have been granted official approval. Therefore, we cannot, of course, assume any liability if these products are installed.

> ⚠ **WARNING**
>
> *The products from Volkswagen genuine parts and Votex genuine accessories may differ in fitting requirements, torque specifications and so on.*
>
> *Always follow the respective fitting and operating instructions.*

The wheel and tyre combinations or changes listed in the vehicle tables refer exclusively to Volkswagen Genuine wheels. Approval of wheel and tyre combinations or a change to wheels from the accessories trade is not possible with the parts certificate attached here.

> ⚠ **WARNING**
>
> *The fitting instructions and torque specifications for wheels from Votex genuine accessories may differ from those intended for wheels from Volkswagen genuine parts.*
>
> *Therefore, always observe the torque settings for the wheel bolts as well as the respective fitting and operating instructions.*

27.1 Passat, type 3C from model year 2006

Attachment to parts certificate 1906/05

Type Approval No.: e1*2001/116*0307*00 bis e1*2001/116*0307*04

Overview

Model engine output	Tyres	Tyre size	Wheel	Off-set in mm	Snow chains	Remarks
1.6l 75 kW; 1.6l 85 kW petrol engines;	Standard tyres	205/55 R 16 91H	$6^1/_2$ J x 16 ⇨ page 318	42	Yes	
1.9l 77 kW TDI; 2.0l 90 kW TDI diesel engines	Modification	215/55 R 16 93H	$6^1/_2$ J x 16 ⇨ page 318	42	No	General notes on winter tyres
		205/55 R 16 91H	7 J x 16 ⇨ page 318	45	No	Tyre makes recommended by Volkswagen:

Protected by copyright. Copying for private or commercial purposes, in part or in whole, is not permitted unless authorised by Volkswagen AG. Volkswagen AG does not guarantee or accept any liability with respect to the correctness of information in this document. Copyright by Volkswagen AG.

satelettronica

Model engine output	Tyres	Tyre size	Wheel	Off-set in mm	Snow chains	Remarks
		215/55 R 16 93H	7 J x 16 ⇒ page 318	45	No	♦ Summer tyres ⇒ page 378 ♦ All-season tyres ⇒ page 384 ♦ Winter tyres ⇒ page 395
		235/45 R 17 94V	7 1/2 J x 17 ⇒ page 320	47	No	
		235/40 R 18 95Y* ⇒ page 316	8 J x 18 ⇒ page 322	44	No	* The 235/40 R 18 95Y on the 8 J x 18 ET 44 rim is permitted only if the stated conditions are fulfilled ⇒ page 322 .
	Winter tyres	205/55 R 16 91H/V	6 1/2 J x 16 ⇒ page 318	42	Yes	
		205/50 R 17 93H/V	6 J x 17 ⇒ page 319	45	Yes	
2.0l 110 kW petrol engine	Standard tyres	205/55 R 16 91V	6 1/2 J x 16 ⇒ page 318	42	Yes	
	Modification	215/55 R 16 93V	6 1/2 J x 16 ⇒ page 318	42	No	
		205/55 R 16 91V	7 J x 16 ⇒ page 318	45	No	
		215/55 R 16 93V	7 J x 16 ⇒ page 318	45	No	
		235/45 R 17 94V	7 1/2 J x 17 ⇒ page 320	47	No	
		235/40 R 18 95Y* ⇒ page 316	8 J x 18 ⇒ page 322	44	No	
	Winter tyres	205/55 R 16 91H/V	6 1/2 J x 16 ⇒ page 318	42	Yes	
		205/50 R 17 93H/V	6 J x 17 ⇒ page 319	45	Yes	
2.0l 100 kW TDI 2.0l 103 kW TDI diesel engines	Standard tyres	205/55 R 16 94V	6 1/2 J x 16 ⇒ page 318	42	Yes	
	Modification	215/55 R 16 93V	6 1/2 J x 16 ⇒ page 318	42	No	

Protected by copyright. Copying for private or commercial purposes, in part or in whole, is not permitted unless authorised by Volkswagen AG. Volkswagen AG does not guarantee or accept any liability with respect to the correctness of information in this document. Copyright by Volkswagen AG.
satelettronica

Protected by copyright. Copyright by Volkswagen AG. Volkswagen AG does not guarantee or accept liability with respect to the correctness of information. Copyright by Volkswagen AG. Protected by copyright. Copyright by Volkswagen AG. Volkswagen AG. is not permitted unless authorised by Volkswagen AG, in whole, in part or in commercial purposes, in part or in whole, is not permitted or commercial purposes, in part or in whole, is not permitted unless authorised by Volkswagen AG.

Model engine output	Tyres	Tyre size	Wheel	Off-set in mm	Snow chains	Remarks
		205/55 R 16 94V	7 J x 16 ⇒ page 318	45	No	
		215/55 R 16 93V	7 J x 16 ⇒ page 318	45	No	
		235/45 R 17 94V	7 1/2 J x 17 ⇒ page 320	47	No	
		235/40 R 18 95Y* ⇒ page 316	8 J x 18 ⇒ page 322	44	No	
	Winter tyres	205/55 R 16 94H/V	6 1/2 J x 16 ⇒ page 318	42	Yes	
		205/50 R 17 93H/V	6 J x 17 ⇒ page 319	45	Yes	
2.0l 147 kW petrol engine	Standard tyres	205/55 R 16 94W	6 1/2 J x 16 ⇒ page 318	42	Yes	
	Modification	215/55 R 16 93W	6 1/2 J x 16 ⇒ page 318	42	No	
		215/55 R 16 93W	7 J x 16 ⇒ page 318	45	No	
		235/45 R 17 94W	7 1/2 J x 17 ⇒ page 320	47	No	
		235/40 R 18 95Y* ⇒ page 316	8 J x 18 ⇒ page 322	44	No	
	Winter tyres	205/55 R 16 94H/V	6 1/2 J x 16 ⇒ page 318	42	Yes	
		205/50 R 17 93H/V	6 J x 17 ⇒ page 319	45	Yes	

Tyre pressures can be found on the inside of the fuel tank flap or in ⇒ Maintenance ; Booklet 21.1 .

27.2 Wheel allocation for Passat, type 3C from model year 2006

Explanation of information on wheels

Wheel bolt torque settings ⇒ Running gear, axles, steering; Rep. gr. 44 ; Wheel bolt torque settings .

Pitch circle diameter	112 mm
Number of wheel bolt holes:	5

satelettronica

27.2.1 6 1/2 J x 16

Caution

Observe the allocation of wheels and tyres to the respective engines, which are listed in the overview table ⇒ page 315 .

3C0 601 027 H - Wheel and tyre combination ⇒ page 315

Size:	6 1/2 J x 16
Wheel offset in mm:	42
Wheel load in kg:	650

Winter wheel

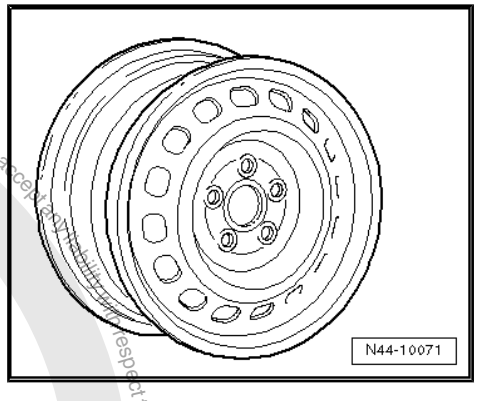

3C0 601 025 F - Wheel and tyre combination ⇒ page 316

Size:	6 1/2 J x 16
Wheel offset in mm:	42
Wheel load in kg:	650

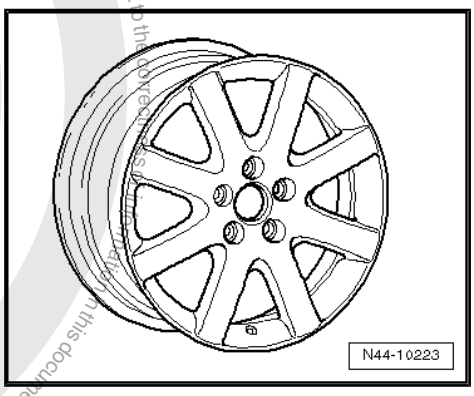

27.2.2 7 J x 16

Caution

Observe the allocation of wheels and tyres to the respective engines, which are listed in the overview table ⇒ page 315 .

3C0 601 025 - Wheel and tyre combination ⇒ page 315

Size:	7 J x 16
Wheel offset in mm:	45
Wheel load in kg:	650

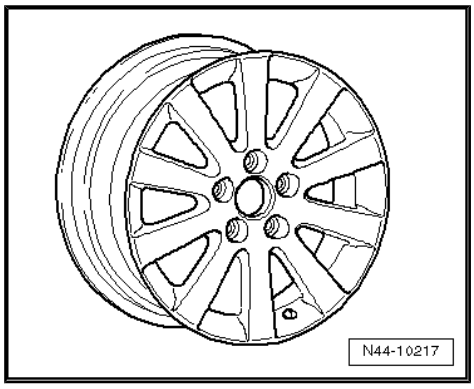

Protected by copyright. Copying for private or commercial purposes, in part or in whole, is not permitted unless authorised by Volkswagen AG. Volkswagen AG does not guarantee or accept any liability with respect to the correctness of this document. Copyright by Volkswagen AG.

satelettronica

3C0 601 025 A - Wheel and tyre combination ⇒ page 315

Size:	7 J x 16
Wheel offset in mm:	45
Wheel load in kg:	650

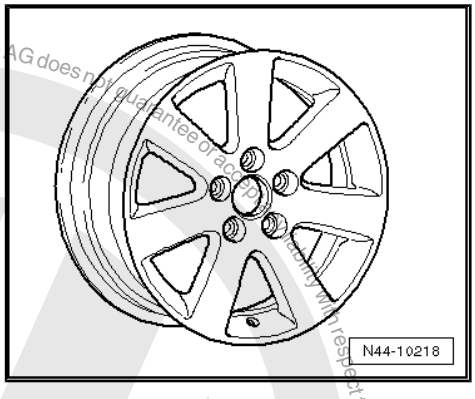

3C0 601 025 B - Wheel and tyre combination ⇒ page 315

Size:	7 J x 16
Wheel offset in mm:	45
Wheel load in kg:	650

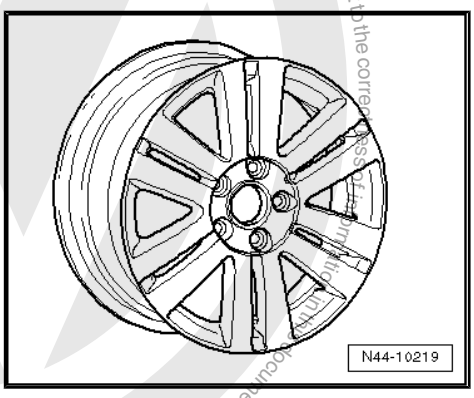

3C0 601 025 C - Wheel and tyre combination ⇒ page 315

Size:	7 J x 16 EH2
Wheel offset in mm:	45
Wheel load in kg:	650

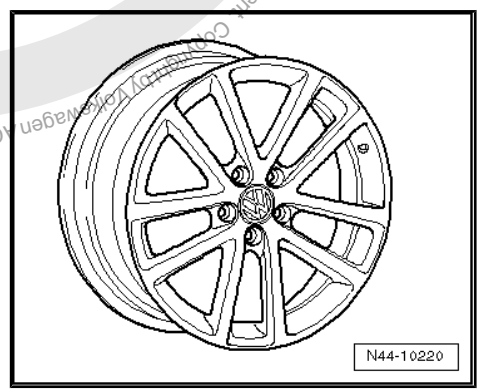

27.2.3 6 J x 17

Caution

Observe the allocation of wheels and tyres to the respective engines, which are listed in the overview table ⇒ page 315 *.*

Protected by copyright. Copying for private or commercial purposes, in part or in whole, is not permitted unless authorised by Volkswagen AG. Volkswagen AG does not guarantee or accept any liability with respect to the correctness of information in this document. Copyright by Volkswagen AG.

satelettronica

Winter wheel

3C0 601 025 M - Wheel and tyre combination ⇒ page 316

Size:	6 J x 17
Wheel offset in mm:	45
Wheel load in kg:	650

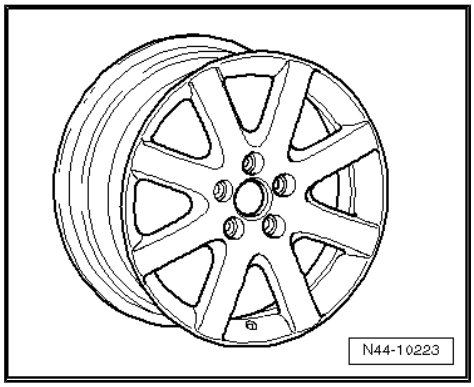

27.2.4 7 1/2 J x 17

Caution

Observe the allocation of wheels and tyres to the respective engines, which are listed in the overview table *⇒ page 315* *.*

3C0 601 025 D - Wheel and tyre combination ⇒ page 316

Size:	7 1/2 J x 17
Wheel offset in mm:	47
Wheel load in kg:	650

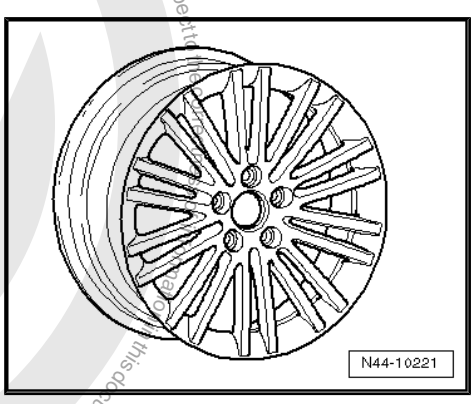

3C0 601 025 E - Wheel and tyre combination ⇒ page 316

Size:	7 1/2 J x 17
Wheel offset in mm:	47
Wheel load in kg:	650

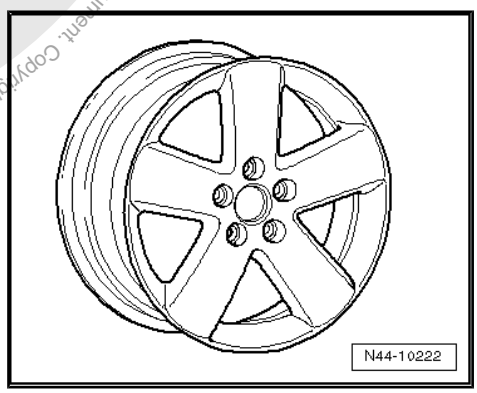

Protected by copyright. Copying for private or commercial purposes, in part or whole, is not permitted unless authorised by Volkswagen AG. Volkswagen AG does not guarantee or accept any liability with respect to this document. Copyright by Volkswagen AG.
satelettronica

3C0 601 025 G - Wheel and tyre combination ⇒ page 316

Size:	$7^1/_2$ J x 17
Wheel offset in mm:	47
Wheel load in kg:	650

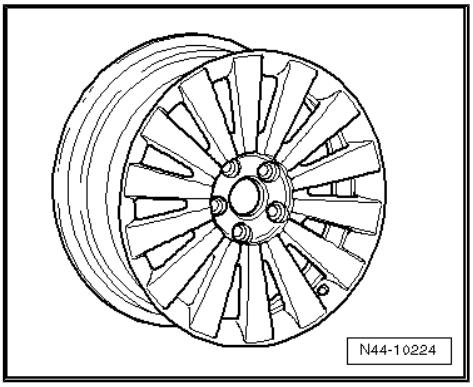

3C0 601 025 J - Wheel and tyre combination ⇒ page 316

Size:	$7^1/_2$ J x 17
Wheel offset in mm:	47
Wheel load in kg:	650

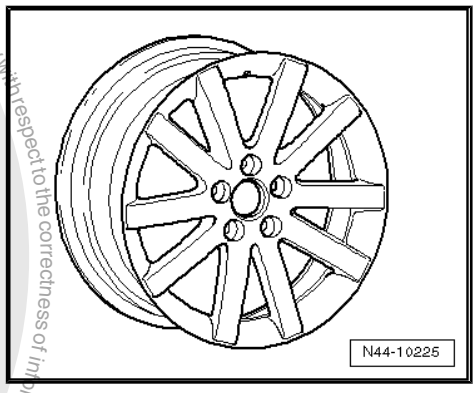

3C0 601 025 K - Wheel and tyre combination ⇒ page 316

Size:	$7^1/_2$ J x 17
Wheel offset in mm:	47
Wheel load in kg:	650

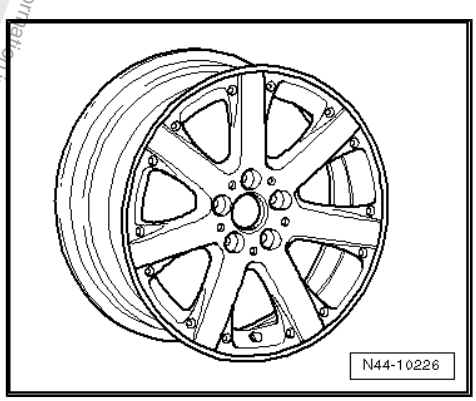

3C0 601 025 R - Wheel and tyre combination ⇒ page 316

Size:	$7^1/_2$ J x 17
Wheel offset in mm:	47
Wheel load in kg:	650

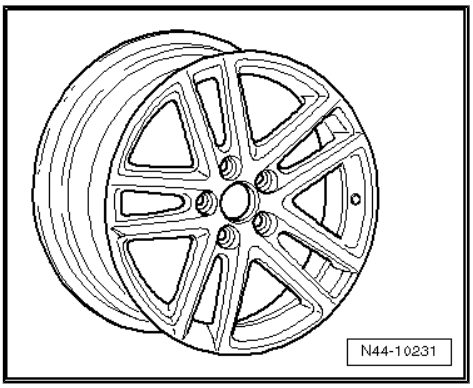

Protected by copyright. Copyright by Volkswagen AG.
Copyright by Volkswagen AG. Volkswagen AG does not guarantee or accept any liability with respect to the correctness of information in this document. Copying or reproduction in whole or in part is only permitted unless authorised by Volkswagen AG. Volkswagen AG does not guarantee or accept any liability with respect to the correctness of information in this document. Copyright by Volkswagen AG.
satelettronica

3C0 601 025 S - Wheel and tyre combination ⇒ page 316

Size:	$7^1/_2$ J x 17
Wheel offset in mm:	47
Wheel load in kg:	650

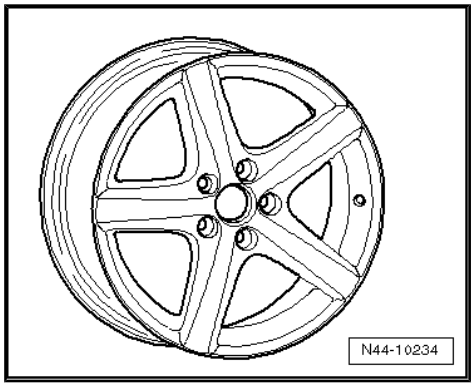

27.2.5 8 J x 18

Caution

Observe the allocation of wheels and tyres to the respective engines, which are listed in the overview table *⇒ page 315* *.*

Caution

Fitting 8 J x 18" wheels is possible only under the following conditions:

- *Sports running gear lowered about 15 mm and equipped with a spring travel limiter must be installed. Rear axle cambe must be set to 1°45'.*
- *Trims must be installed on all wheel covers ⇒ Electronic parts catalogue „ETKA" - with the exception of Germany, where trims may be left off with TÜV examination No. 1839/05.*

3C0 601 025 AA - Wheel and tyre combination ⇒ page 316

Size:	8 J x 18
Wheel offset in mm:	44
Wheel load in kg:	650

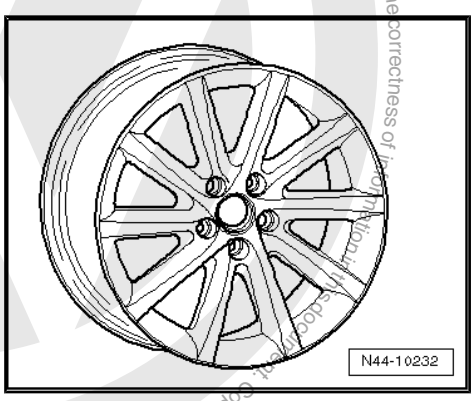

3C0 601 025 T - Wheel and tyre combination ⇒ page 316

Size:	8 J x 18
Wheel offset in mm:	44
Wheel load in kg:	650

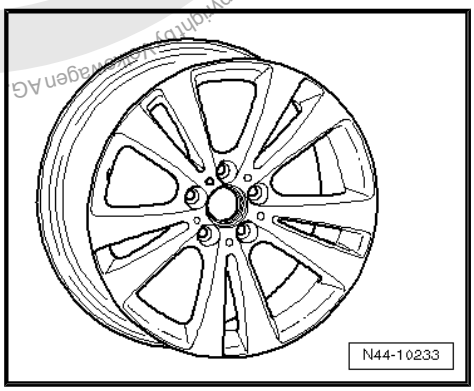

Protected by copyright. Copyright by Volkswagen AG. Volkswagen AG does not guarantee or accept any liability with respect to the correctness of information. Copying for private or commercial purposes, in part or in whole, is not permitted unless authorised by Volkswagen AG.
satelettronica

Protected by copyright. Copying for private or commercial purposes, in part or in whole, is not permitted unless authorised by Volkswagen AG. Volkswagen AG does not guarantee or accept any liability with respect to the correctness of information in this document. Copyright by Volkswagen AG.

28 Phaeton from model year 2003

General

Volkswagen vehicles are built according to the latest findings in safety engineering. To keep it that way, we recommend the use of genuine Volkswagen spare parts only. You can recognise this by the VW Audi logo and by the part number. It has been established that these parts are reliable, safe and suitable.

Despite constant appraisal of the market, we cannot assess other products on these points, even when in isolated cases they have been passed by official inspectors or have been granted official approval. Therefore, we cannot, of course, assume any liability if these products are installed.

> ⚠ **WARNING**
>
> *The products from Volkswagen genuine parts and Votex genuine accessories may differ in fitting requirements, torque specifications and so on.*
>
> *Always follow the respective fitting and operating instructions.*

The wheel and tyre combinations or changes listed in the vehicle tables refer exclusively to Volkswagen Genuine wheels. Approval of wheel and tyre combinations or a change to wheels from the accessories trade is not possible with the parts certificate attached here.

> ⚠ **WARNING**
>
> *The fitting instructions and torque specifications for wheels from Votex genuine accessories may differ from those intended for wheels from Volkswagen genuine parts.*
>
> *Therefore, always observe the torque settings for the wheel bolts as well as the respective fitting and operating instructions.*

28.1 Phaeton, type 3D from model year 2003 through model year 2006 - short and long wheelbase

Attachment to parts certificate 1905/05

Type Approval No. e1*98/14*0189*00 through e1*98/14*0189*03

Type Approval No.: e1*2001/116*0189*04 through e1*2001/116*0189*09

Overview

Model engine output	Tyres	Tyre size	Wheel	Off-set in mm	Snow chains	Remarks
V6 3.2l 177 kW front-wheel drive	Standard tyres	235/60 R 16 100Y	$7^1/_2$ J x 16 ⇒ page 325	40	Yes	Snow chains: Only the listed snow chains are approved! Article No. ⇒ page 325
	Modification	235/55 R 17 99Y	$7^1/_2$ J x 17 ⇒ page 326	40	Yes	

satelettronica

Model engine output	Tyres	Tyre size	Wheel	Off-set in mm	Snow chains	Remarks
		235/50 R 18 101Y	7 1/2 J x 18 ⇒ page 327	40	Yes	
		255/45 R 18 103Y	8 1/2 J x 18 ⇒ page 327	45	No	General notes on winter tyres
		255/40 R 19 100Y	8 1/2 J x 19 ⇒ page 329	45	No	
		255/40 R 19 100Y	9 J x 19 ⇒ page 329	40	No	Tyre makes recommended by Volkswagen: ♦ Summer tyres ⇒ page 378 ♦ All-season tyres ⇒ page 385 ♦ Winter tyres ⇒ page 395
	Winter tyres	235/60 R 16 100H/V	7 1/2 J x 16 ⇒ page 325	40	Yes	
		235/55 R 17 99H/V	7 1/2 J x 17 ⇒ page 326	40	Yes	
V6 3.2l 177 kW four-wheel drive; V6 TDI 3.0l 165 kW; V8 4.2l 246 kW	Standard tyres	235/55 R 17 99Y	7 1/2 J x 17 ⇒ page 326	40	Yes	Snow tyres with „V“ rating
	Modification	235/50 R 18 101Y	7 1/2 J x 18 ⇒ page 327	40	Yes	Tyre fitting ⇒ page 325 : Before fitting tyres, observe fitting notes in ⇒ Running gear, axles, steering; Rep. gr. 44
		255/45 R 18 103Y	8 1/2 J x 18 ⇒ page 327	45	No	
		255/40 R 19 100Y	8 1/2 J x 19 ⇒ page 329	45	No	
		255/40 R 19 100Y	9 J x 19 ⇒ page 329	40	No	
	Winter tyres	235/55 R 17 99H/V	7 1/2 J x 17 ⇒ page 326	40	Yes	
		235/50 R 18 101H/V	7 1/2 J x 18 ⇒ page 327	40	Yes	
W12 6.0l 309 kW; W12 6.0l 331 kW petrol engines	Standard tyres	235/50 R 18 101Y	7 1/2 J x 18 ⇒ page 327	40	Yes	
V10 TDI 5.0l 230 kW diesel engine	Modification	255/45 R 18 103Y	8 1/2 J x 18 ⇒ page 327	45	No	

Copyright by Volkswagen AG. Volkswagen AG does not guarantee or accept any liability with respect to the correctness of information in this document. Copyright by Volkswagen AG. Copying for private or commercial purposes, in part or in whole, is not permitted unless authorised by Volkswagen AG.

satelettronica

Model engine output	Tyres	Tyre size	Wheel	Off-set in mm	Snow chains	Remarks
	Winter tyres	235/50 R 18 101H/V	$7^1/_2$ J x 18 ⇒ page 327	40	Yes	

Tyre pressures can be found on the inside of the fuel tank flap or in ⇒ Maintenance ; Booklet 16.1 .

– If the vehicle has a tyre pressure monitoring system, check remaining battery life of the tyre pressure sensors with ⇒ Vehicle diagnostic tester before fitting tyres.

Approved snow chains for Phaeton

The snow chains listed below are permitted only in conjunction with the wheel and tyre combinations listed next to them!

Chain manufacturer Article No.	Accessories part No.	Tyre size	Wheel
Ottinger	Z 091 594	235/60 R 16 100H/V	$7^1/_2$ J x 16 ET 40
		235/55 R 17 99Y	$7^1/_2$ J x 17 ET 40
		235/50 R 18 101H/V	$7^1/_2$ J x 18 ET 40
Rud	Z 091 592	235/60 R 16 100H/V	$7^1/_2$ J x 16 ET 40
		235/55 R 17 99Y	$7^1/_2$ J x 17 ET 40
		235/50 R 18 101H/V	$7^1/_2$ J x 18 ET 40

28.2 Wheel allocation for Phaeton, type 3D from model year 2003 through model year 2006 - short and long wheelbase

Explanation of information on wheels

Torque specifications for wheel bolts ⇒ Running gear, axles, steering - front and four-wheel drive; Rep. gr. 44 ; Fitting wheels and tyres; Fitting wheels

Pitch circle diameter	112 mm
Number of wheel bolt holes:	5

28.2.1 $7^1/_2$ J x 16

Caution

Observe the allocation of wheels and tyres to the respective engines, which are listed in the overview table ⇒ page 323 .

Protected by copyright. Copyright by Volkswagen AG. Volkswagen AG does not guarantee or accept any liability with respect to the correctness of information in this document. Copyright by Volkswagen AG.
satelettronica

Protected by copyright. Copying for private or commercial purposes, in part or in whole, is not permitted unless authorised by Volkswagen AG. Volkswagen AG does not guarantee or accept any liability with respect to the correctness of information in this document. Copyright by Volkswagen AG.

3D0 601 025 - Wheel and tyre combination ⇒ page 323

Only for vehicles to maximum permissible axle load of 1,400 kg

Size:	$7^1/_2$ J x 16
Wheel offset in mm:	40
Wheel load in kg:	700

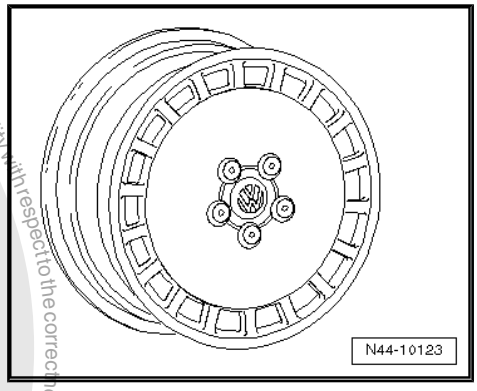

28.2.2 $7^1/_2$ J x 17

Caution

Observe the allocation of wheels and tyres to the respective engines, which are listed in the overview table *⇒ page 323* *.*

Front-wheel drive and 4Motion

3D0 601 025 G - Wheel and tyre combination ⇒ page 323

Size:	$7^1/_2$ J x 17
Wheel offset in mm:	40
Wheel load in kg:	830

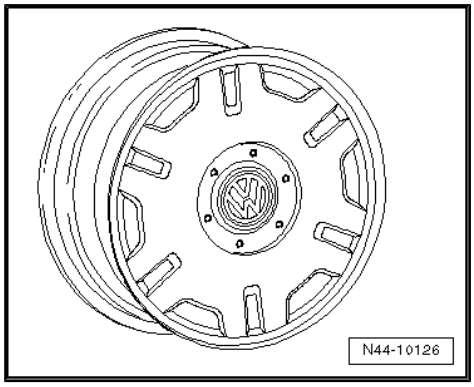

3D0 601 025 L, 3D0 601 025 AC - Wheel and tyre combination ⇒ page 323

Size:	$7^1/_2$ J x 17
Wheel offset in mm:	40
Wheel load in kg:	835

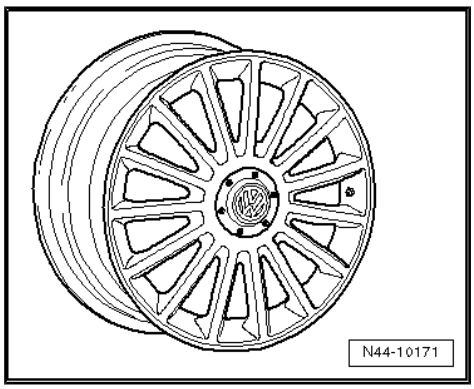

satelettronica

Protected by copyright. Copying for private or commercial purposes, in part or in whole, is not permitted unless authorised by Volkswagen AG. Volkswagen AG does not guarantee or accept any liability with respect to the correctness of information in this document. Copyright by Volkswagen AG.

3D0 601 025 M - Wheel and tyre combination ⇒ page 323

Size:	$7^1/_2$ J x 17
Wheel offset in mm:	40
Wheel load in kg:	835

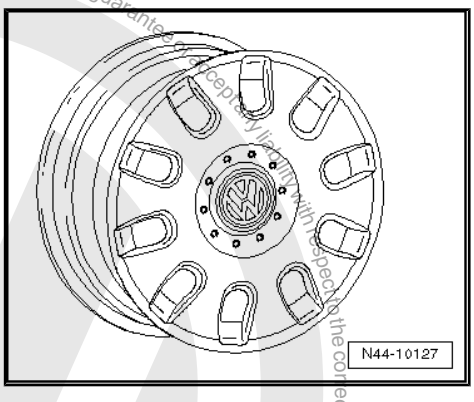

3D0 601 025 AA - Wheel and tyre combination ⇒ page 323

Size:	$7^1/_2$ J x 17
Wheel offset in mm:	40
Wheel load in kg:	840

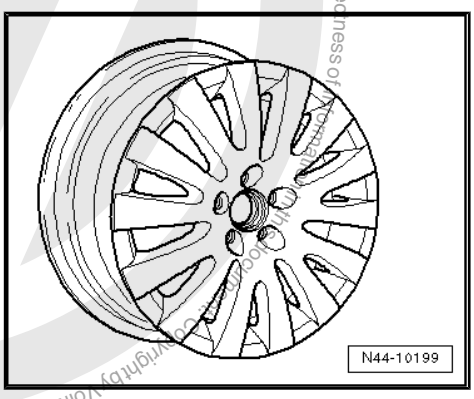

28.2.3 $7^1/_2$ J x 18

Caution

Observe the allocation of wheels and tyres to the respective engines, which are listed in the overview table *⇒ page 323* *.*

Front-wheel drive and 4Motion

3D0 601 025 B - Wheel and tyre combination ⇒ page 324

Size:	$7^1/_2$ J x 18
Wheel offset in mm:	40
Wheel load in kg:	835

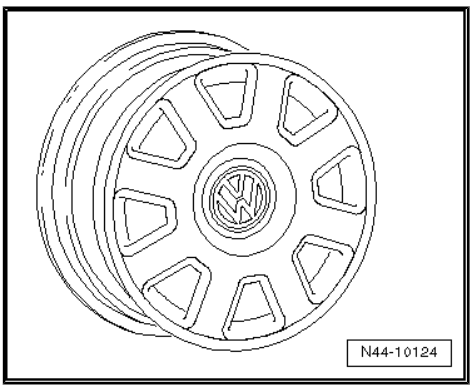

28.2.4 $8^1/_2$ J x 18

Caution

Observe the allocation of wheels and tyres to the respective engines, which are listed in the overview table *⇒ page 323* *.*

satelettronica

Front-wheel drive and 4Motion

3D0 601 025 Q - Wheel and tyre combination ⇒ page 324

Size:	$8^1/_2$ J x 18
Wheel offset in mm:	45
Wheel load in kg:	835

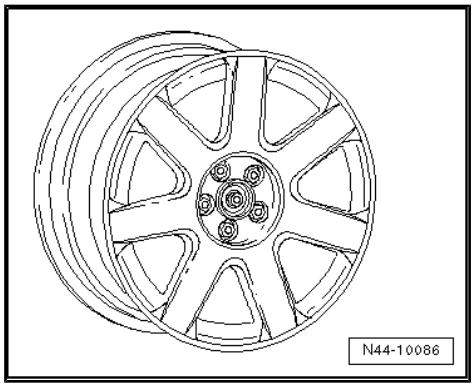

3D0 601 025 AB - Wheel and tyre combination ⇒ page 324

Size:	$8^1/_2$ J x 18
Wheel offset in mm:	45
Wheel load in kg:	840

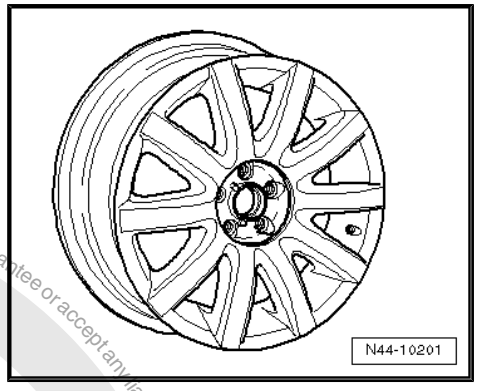

3D0 601 025 S - Wheel and tyre combination ⇒ page 324

Size:	$8^1/_2$ J x 18
Wheel offset in mm:	45
Wheel load in kg:	840

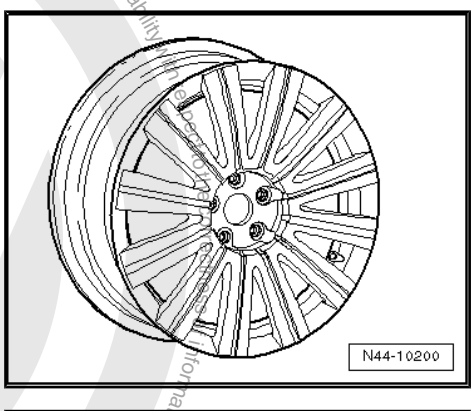

3D0 601 025 C - Wheel and tyre combination ⇒ page 324

Only for vehicles to maximum permissible axle load of 1,550 kg

Size:	$8^1/_2$ J x 18
Wheel offset in mm:	45
Wheel load in kg:	775

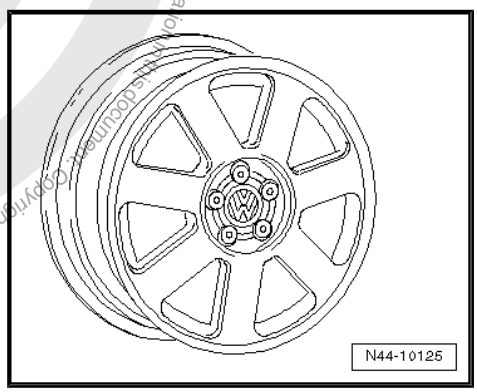

Protected by copyright. Copying for private or commercial purposes, in part or whole, is not permitted unless authorised by Volkswagen AG. Volkswagen AG does not guarantee or accept any liability with respect to the correctness of information in this document. Copyright by Volkswagen AG.

satelettronica

Protected by copyright. Copying for private or commercial purposes, in part or in whole, is not permitted unless authorised by Volkswagen AG. Volkswagen AG does not guarantee or accept any liability with respect to the correctness of information. Copyright by Volkswagen AG.

28.2.5 8 1/2 J x 19

Caution

Observe the allocation of wheels and tyres to the respective engines, which are listed in the overview table ⇒ page 323 *.*

Front-wheel drive and 4Motion

3D0 601 025 J - Wheel and tyre combination ⇒ page 324

Size:	8 1/2 J x 19
Wheel offset in mm:	45
Wheel load in kg:	835

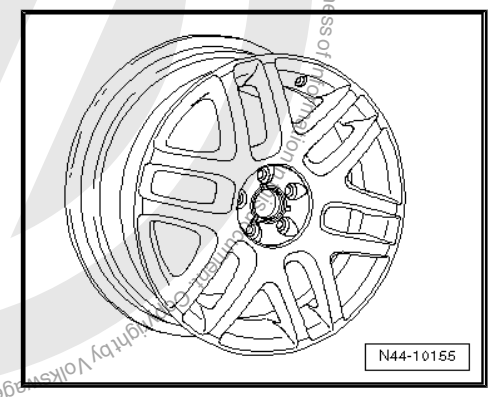

28.2.6 9 J x 19

Caution

Observe the allocation of wheels and tyres to the respective engines, which are listed in the overview table ⇒ page 323 *.*

Front-wheel drive and 4Motion

3D0 601 025 P - Wheel and tyre combination ⇒ page 324

Size:	9 J x 19
Wheel offset in mm:	40
Wheel load in kg:	835

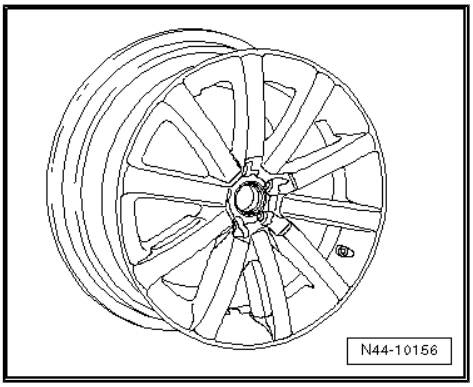

satelettronica

29 Sharan from model year 1996

General

Volkswagen vehicles are built according to the latest findings in safety engineering. To keep it that way, we recommend the use of genuine Volkswagen spare parts only. You can recognise this by the VW Audi logo and by the part number. It has been established that these parts are reliable, safe and suitable.

Despite constant appraisal of the market, we cannot assess other products on these points, even when in isolated cases they have been passed by official inspectors or have been granted official approval. Therefore, we cannot, of course, assume any liability if these products are installed.

WARNING

The products from Volkswagen genuine parts and Votex genuine accessories may differ in fitting requirements, torque specifications and so on.

Always follow the respective fitting and operating instructions.

The wheel and tyre combinations or changes listed in the vehicle tables refer exclusively to Volkswagen Genuine wheels. Approval of wheel and tyre combinations or a change to wheels from the accessories trade is not possible with the parts certificate attached here.

WARNING

The fitting instructions and torque specifications for wheels from Votex genuine accessories may differ from those intended for wheels from Volkswagen genuine parts.

Therefore, always observe the torque settings for the wheel bolts as well as the respective fitting and operating instructions.

29.1 Sharan, Sharan Syncro, type 7M from model year 1996 through model year 2000

Attachment to parts certificate 1908/05

Type Approval No.: e1*93/81*0023*00 to e1*93/81*0023*03

Type Approval No.: e1*95/54*0023*04 to e1*95/54*0023*09

Type Approval No.: e1*98/14*0023*10 to e1*98/14*0023*12

Overview

WARNING

Wheel bolts and/or wheels from vehicles from model year 2001 are not permitted! Distinguishing features

satelettronica
Protected by copyright. Copying for private and commercial purposes, in part or in whole, is not permitted unless authorised by Volkswagen AG. Volkswagen AG does not guarantee or accept any liability with respect to the correctness of information in this document. Copyright by Volkswagen AG.

Model engine output	Tyres	Tyre size	Wheel	Off-set in mm	Snow chains	Remarks
1.9l 66 kW, 81 kW TDI 85 kW petrol engine CL, GL Carat	Standard tyres	195/65 R 15 95T reinforced/XL	6 J x 15 ⇒ page 333	55	Yes	Conversion to 7 J x 15 wheels: For vehicles with CL or GL equipment through vehicle No. T005000, track rod joints 7M0 422 817 A/ 7M0 422 818 A must be installed.
	Modification	195/65 R 15 95T reinforced/XL	7 J x 15 ⇒ page 333	59	No	
		205/60 R 15 95H reinforced/XL	6 J x 15 ⇒ page 333	55	Yes	General notes on winter tyres
		205/60 R 15 95H reinforced/XL	7 J x 15 ⇒ page 333	59	No	Tyre makes recommended by Volkswagen: ◆ Summer tyres ⇒ page 378 ◆ Winter tyres ⇒ page 396
		215/60 R 15 95H	6 J x 15 ⇒ page 333	55	No	
		215/60 R 15 95H	7 J x 15 ⇒ page 333	59	No	
		215/55 R 16 93H* ⇒ page 331	7 J x 16 ⇒ page 334	59	No	* 215/55 R 16 93H: tyres are not permitted for Syncro and 1.9l 85 kW TDI vehicles!
		215/55 R 16 95H** ⇒ page 331 reinforced/XL	7 J x 16 ⇒ page 334	59	No	
	Winter tyres	195/65 R 15 95Q/T reinforced/XL	6 J x 15 ⇒ page 333	55	Yes	
1.8l 110 kW; 128 kW VR6 GL, Carat; 128 kW VR6 Syncro GL, Carat	Standard tyres	205/60 R 15 95H reinforced/XL	6 J x 15 ⇒ page 333	55	Yes	** Tyre pressure for 1.9l 85 kW TDI ⇒ page 332
	Modification	205/60 R 15 95H reinforced/XL	7 J x 15 ⇒ page 333	59	No	
		215/60 R 15 95H	6 J x 15 ⇒ page 333	55	No	
		215/60 R 15 95H	7 J x 15 ⇒ page 333	59	No	
		215/55 R 16 93H	7 J x 16 ⇒ page 334	59	No	
	Winter tyres	195/65 R 15 95Q/T reinforced/XL	6 J x 15 ⇒ page 333	55	Yes	

Protected by copyright. Copying for private or commercial purposes, in part or in whole, is not permitted unless authorised by Volkswagen AG. Volkswagen AG does not guarantee or accept any liability with respect to the correctness of information in this document. Copyright by Volkswagen AG.

satelettronica

Model engine output	Tyres	Tyre size	Wheel	Off-set in mm	Snow chains	Remarks
All vehicles with Carat equipment	Standard tyres	215/60 R 15 95H	7 J x 15 ⇒ page 333	59	No	
	Modification	215/55 R 16 93H* ⇒ page 331	7 J x 16 ⇒ page 334	59	No	
		215/55 R 16 95H** ⇒ page 331 rein-forced/XL	7 J x 16 ⇒ page 334	59	No	
		205/60 R 15 95H reinforced/XL	6 J x 15 ⇒ page 333	55	Yes	
		205/60 R 15 95H reinforced/XL	7 J x 15 ⇒ page 333	59	No	
		215/60 R 15 95H	6 J x 15 ⇒ page 333	55	No	
	Winter tyres	195/65 R 15 95Q/T reinforced/XL	6 J x 15 ⇒ page 333	55	Yes	
All vehicles with Trendline/High-line equipment	Standard tyres	215/55 R 16 95H reinforced/XL	7 J x 16 ⇒ page 334	59	No	
	Modification	215/55 R 16 93H* ⇒ page 331	7 J x 16 ⇒ page 334	59	No	
		215/55 R 16 95H** ⇒ page 331 rein-forced/XL	7 J x 16 ⇒ page 334	59	No	
		205/60 R 15 95H reinforced/XL	6 J x 15 ⇒ page 333	55	Yes	
		205/60 R 15 95H reinforced/XL	7 J x 15 ⇒ page 333	59	No	
		215/60 R 15 95H	6 J x 15 ⇒ page 333	55	No	
		215/60 R 15 95H	7 J x 15 ⇒ page 333	59	No	
	Winter tyres	195/65 R 15 95Q/T reinforced/XL	6 J x 15 ⇒ page 333	55	Yes	

Tyre pressures can be found on the inside of the fuel tank flap or in ⇒ Maintenance ; Booklet 10.1 .

Exceptions to this are the 215/55 R 16 95H tyres, see "Remarks" column ⇒ page 331

Tyre pressure for 1.9l 85 kW TDI:

Tyre pressure M + S:	
Part load front:	2.9
Part load rear:	2.5

Protected by copyright. Copying for private or commercial purposes, in part or in whole, is not permitted unless authorised by Volkswagen AG. Volkswagen AG does not guarantee or accept any liability with respect to the correctness of information in this document. Copyright by Volkswagen AG.

satelettronica

Tyre pressure M + S:	
Full load front:	3.1
Full load rear:	3.3

29.2 Wheel allocation for Sharan, Sharan Syncro type M7 model year 1996 through model year 2000

Explanation of information on wheels

Wheel bolt torque settings ⇒ Running gear, axles, steering - front and four-wheel drive; Rep. gr. 44 ; Wheel bolt torque settings

Pitch circle diameter	112 mm
Number of wheel bolt holes:	5

29.2.1 6 J x 15

Caution

Observe the allocation of wheels and tyres to the respective engines, which are listed in the overview table ⇒ page 330 *.*

All models with front-wheel drive, all Syncro models

7M0 601 027 A - Wheel and tyre combination ⇒ page 331

Size:	6 J x 15
Wheel offset in mm:	55
Wheel load in kg:	690

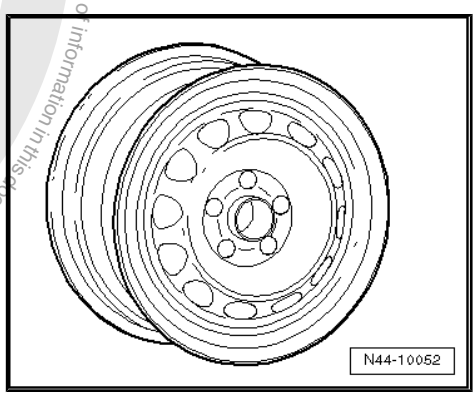

29.2.2 7 J x 15

Caution

Observe the allocation of wheels and tyres to the respective engines, which are listed in the overview table ⇒ page 330 *.*

Note

Snow chains are not permitted with 7 J x 15 or 7 J x 16 wheels. Snow chains are permitted only on 195/65 R 15 and 205/60 R 15 tyres with 6 J x 15 ET 55 wheels. The track rod joints 7M0 422 817 A/7M0 422 818 A must be installed on vehicles with CL or GL equipment through vehicle No. T005000.

Protected by copyright. Copying for private or commercial purposes, in part or in whole, is not permitted unless authorised by Volkswagen AG. Volkswagen AG does not guarantee or accept any liability with respect to the correctness of information in this document. Copyright by Volkswagen AG.
satelettronica

All models with front-wheel drive, all Syncro models

7M0 601 025, 7M0 601 025 C - Wheel and tyre combination
⇒ page 331

Size:	7 J x 15
Wheel offset in mm:	59
Wheel load in kg:	690

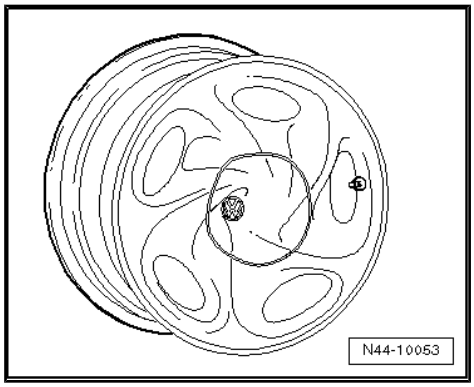

7M0 601 025 F - Wheel and tyre combination ⇒ page 331

Size:	7 J x 15
Wheel offset in mm:	59
Wheel load in kg:	690

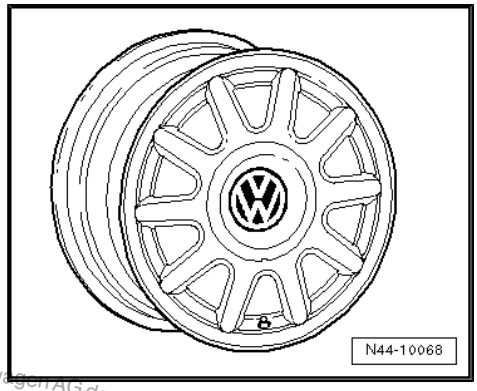

29.2.3 7 J x 16

Caution

Observe the allocation of wheels and tyres to the respective engines, which are listed in the overview table ⇒ page 330 *.*

Note

Snow chains are not permitted with 7 J x 15 or 7 J x 16 wheels. Snow chains are permitted only on 195/65 R 15 and 205/60 R 15 tyres with 6 J x 15 ET 55 wheels. The track rod joints 7M0 422 817 A/7M0 422 818 A must be installed on vehicles with CL or GL equipment through vehicle No. T005000.

All models with front-wheel drive, all Syncro models

7M0 601 025 E - Wheel and tyre combination ⇒ page 331

Size:	7 J x 16
Wheel offset in mm:	59
Wheel load in kg:	690

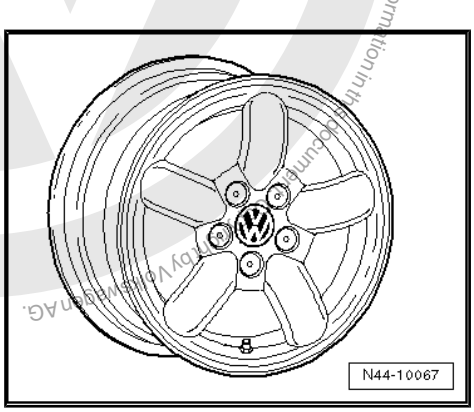

Protected by copyright. Copying for private or commercial purposes, in part or in whole, is not permitted unless authorised by Volkswagen AG. Volkswagen AG does not guarantee or accept any liability with respect to the correctness of information in this document. Copyright by Volkswagen AG.
satelettronica

7M0 601 025 G - Wheel and tyre combination ⇒ page 331

Size:	7 J x 16
Wheel offset in mm:	59
Wheel load in kg:	690

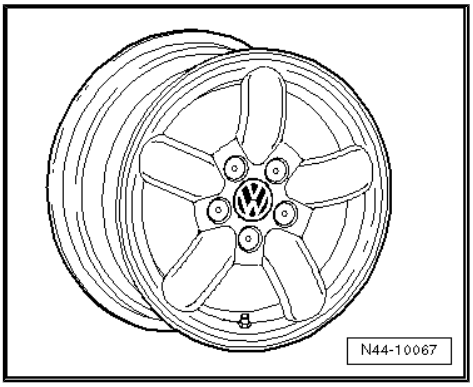

29.3 Sharan, Sharan 4Motion, type 7M model year 2001

Attachment to parts certificate 1908/05

Type Approval No.: e1*98/14*0023*13 to e1*98/14*0023*16

Overview

WARNING

Sharan vehicles from model year 2001 onwards have modified wheel bolts and wheels. Wheel bolts and/or wheels from vehicles through model year 2000 are not permitted!

Model engine output	Tyres	Tyre size	Wheel	Off-set in mm	Snow chains	Remarks
2.0l 85 kW; 1.9l 66 kW TDI	Standard tyres	195/65 R 15 95T reinforced/XL	6 J x 15 ⇒ page 337	55	Yes	
	Modification	205/60 R 15 95H reinforced/XL	6 J x 15 ⇒ page 337	55	Yes	General notes on winter tyres
		215/60 R 15 95H	7 J x 15 ⇒ page 337	59	No	Tyre makes recommended by Volkswagen:
		215/55 R 16 95H reinforced/XL	7 J x 16 ⇒ page 339	59	No	◆ Summer tyres ⇒ page 378 ◆ Winter tyres ⇒ page 396
	Winter tyres	195/65 R 15 95Q/T reinforced/XL	6 J x 15 ⇒ page 337	55	Yes	
		195/60 R 16 C 99/97Q/T	6 J x 16 ⇒ page 337	53	Yes	
1.9l 85 kW TDI front-wheel drive	Standard tyres	205/60 R 15 95H reinforced/XL	6 J x 15 ⇒ page 337	55	Yes	
	Modification	195/65 R 15 95T reinforced/XL	6 J x 15 ⇒ page 337	55	Yes	
		215/60 R 15 95H	7 J x 15 ⇒ page 337	59	No	

Protected by copyright. Copying for private or commercial purposes, in part or in whole, is not permitted unless authorised by Volkswagen AG. Volkswagen AG does not guarantee or assume any liability with respect to the correctness of information in this document. Copyright by Volkswagen AG.
satelettronica

Model engine output	Tyres	Tyre size	Wheel	Off-set in mm	Snow chains	Remarks
		215/55 R 16 95H reinforced/XL	7 J x 16 ⇒ page 339	59	No	
	Winter tyres	195/65 R 15 95Q/T reinforced/XL	6 J x 15 ⇒ page 337	55	Yes	
		195/60 R 16 C 99/97Q/T	6 J x 16 ⇒ page 337	53	Yes	
1.9l 85 kW TDI 4Motion	Standard tyres	215/55 R 16 95H reinforced/XL	6 J x 16 ⇒ page 338	53	No	
		215/55 R 16 95H reinforced/XL	7 J x 16 ⇒ page 339	59	No	
	Modification	No changes are permissible apart from the standard wheel and tyre combinations!				
	Winter tyres	195/60 R 16 C 99/97Q/T	6 J x 16 ⇒ page 338	53	Yes	
1.8l 110 kW Turbo	Standard tyres	205/60 R 15 95H reinforced/XL	6 J x 15 ⇒ page 337	55	Yes	
	Modification	215/60 R 15 95H	7 J x 15	59	No	
		215/55 R 16 95H reinforced/XL	7 J x 16 ⇒ page 339	59	No	
	Winter tyres	195/65 R 15 95Q/T reinforced/XL	6 J x 15 ⇒ page 337	55	Yes	
		195/60 R 16 C 99/97Q/T	6 J x 16 ⇒ page 338	53	Yes	
VR6 150 kW front-wheel drive and 4Motion	Standard tyres	215/55 R 16 95H reinforced/XL	6 J x 16 ⇒ page 338	53	No	
		215/55 R 16 95H reinforced/XL	7 J x 16 ⇒ page 339	59	No	
	Modification	No changes are permissible apart from the standard wheel and tyre combinations!				
	Winter tyres	195/60 R 16 C 99/97Q/T	6 J x 16 ⇒ page 338	53	Yes	

Tyre pressures can be found on the inside of the fuel tank flap or in ⇒ Maintenance ; Booklet 10.1 .

29.4 Wheel allocation for Sharan, Sharan 4Motion, type 7M model year 2001

Explanation of information on wheels

Wheel bolt torque settings ⇒ Running gear, axles, steering - front and four-wheel drive; Rep. gr. 44 ; Wheel bolt torque settings

Pitch circle diameter	112 mm

satelettronica
Protected by copyright. Copying for private or commercial purposes, in part or in whole, is not permitted unless authorised by Volkswagen AG. Volkswagen AG does not guarantee or accept any liability with respect to the correctness of information in this document. Copyright by Volkswagen AG.

Number of wheel bolt holes: 5

29.4.1 6 J x 15

Caution

Observe the allocation of wheels and tyres to the respective engines, which are listed in the overview table ⇒ page 335 *.*

Models through 110 kW with front-wheel drive

7M0 601 027 F - Wheel and tyre combination ⇒ page 335

Size:	6 J x 15
Wheel offset in mm:	55
Wheel load in kg:	690

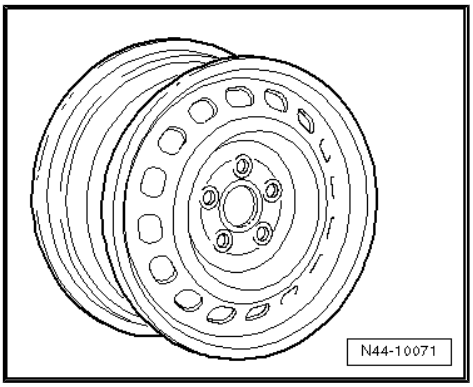

29.4.2 7 J x 15

Caution

Observe the allocation of wheels and tyres to the respective engines, which are listed in the overview table ⇒ page 335 *.*

Models through 110 kW with front-wheel drive

Note

Snow chains are not permitted on 7 J x 15 or 7 J x 16 wheels.

7M3 601 025 B - Wheel and tyre combination ⇒ page 335

Size:	7 J x 15
Wheel offset in mm:	59
Wheel load in kg:	690

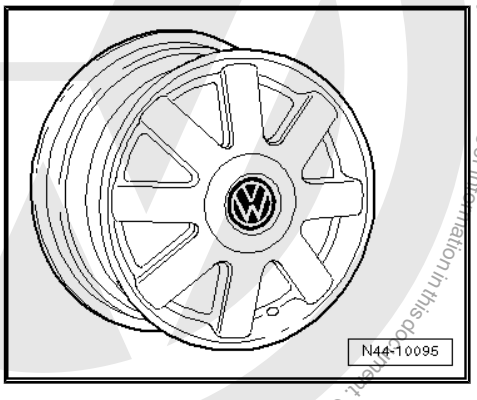

29.4.3 6 J x 16

Caution

Observe the allocation of wheels and tyres to the respective engines, which are listed in the overview table ⇒ page 335 *.*

Protected by copyright. Copying for private or commercial purposes, in part or in whole, is not permitted unless authorised by Volkswagen AG. Volkswagen AG does not guarantee or accept any liability with respect to the correctness of information in this document. Copyright by Volkswagen AG.
satelettronica

Models through 110 kW with front-wheel drive

7M3 601 027 E - Wheel and tyre combination ⇒ page 335

Size:	6 J x 16
Wheel offset in mm:	53
Wheel load in kg:	710

1.9l 85 kW TDI 4Motion, VR6 150 kW front-wheel drive and 4Motion

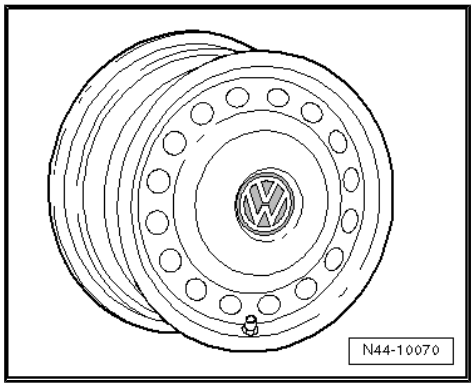

7M3 601 027 D - Wheel and tyre combination ⇒ page 336

For M + S tyres

Size:	6 J x 16
Wheel offset in mm:	53
Wheel load in kg:	690

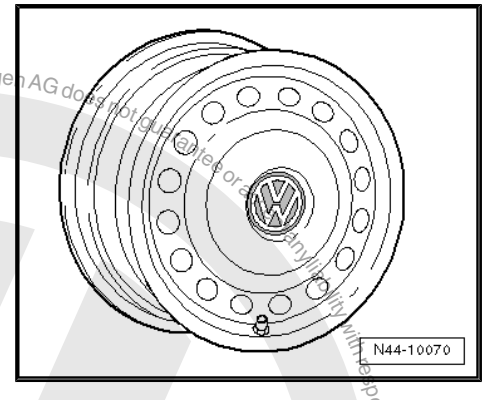

7M3 601 027 E - Wheel and tyre combination ⇒ page 336

Size:	6 J x 16
Wheel offset in mm:	53
Wheel load in kg:	710

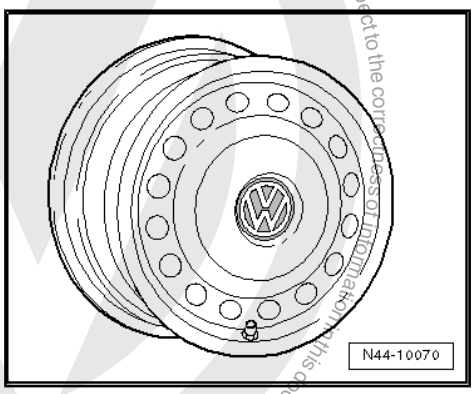

7M3 601 027 F - Wheel and tyre combination ⇒ page 336

Size:	6 J x 16
Wheel offset in mm:	53
Wheel load in kg:	710

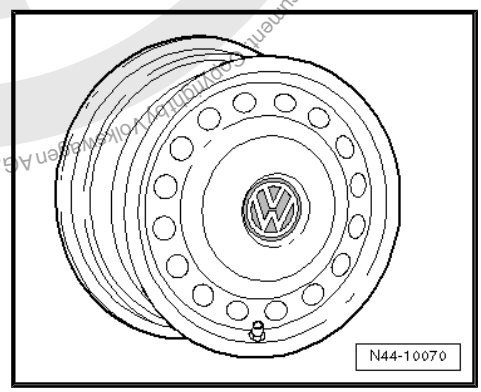

Protected by copyright. Copying for private or commercial purposes, in part or in whole, is not permitted unless authorised by Volkswagen AG. Volkswagen AG does not guarantee or assume any liability with respect to the correctness of information in this document. Copyright by Volkswagen AG.

satelettronica

Protected by copyright. Copyright by Volkswagen AG. Unless authorised by Volkswagen AG, Volkswagen AG does not guarantee or accept any liability with respect to the correctness of information in this document. Copying for private or commercial purposes, in part or in whole, is not permitted.

29.4.4 7 J x 16

Caution

Observe the allocation of wheels and tyres to the respective engines, which are listed in the overview table ⇒ page 335 *.*

Models through 110 kW with front-wheel drive

Note

Snow chains are not permitted on 7 J x 15 or 7 J x 16 wheels.

7M3 601 025 A - Wheel and tyre combination ⇒ page 335

Size:	7 J x 16
Wheel offset in mm:	59
Wheel load in kg:	710

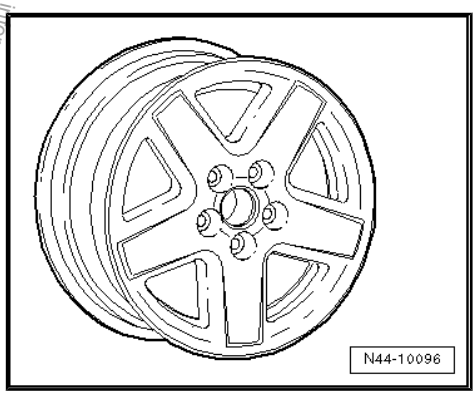

1.9l 85 kW TDI 4Motion, VR6 150 kW front-wheel drive and 4Motion

Note

Snow chains are not permitted on 7 J x 15 or 7 J x 16 wheels.

7M0 601 027 J - Wheel and tyre combination ⇒ page 336

Size:	7 J x 16
Wheel offset in mm:	59
Wheel load in kg:	710

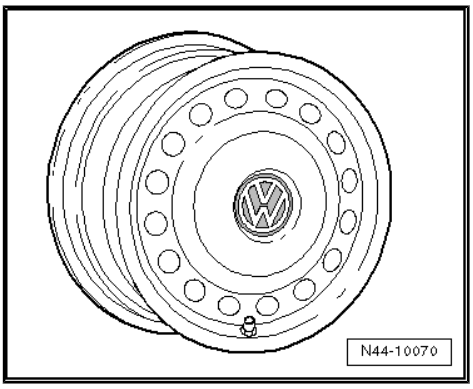

7M3 601 025 A - Wheel and tyre combination ⇒ page 336

Size:	7 J x 16
Wheel offset in mm:	59
Wheel load in kg:	710

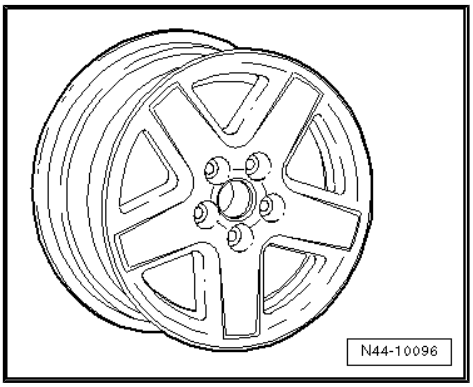

satelettronica

7M3 601 025 D - Wheel and tyre combination ⇒ page 336

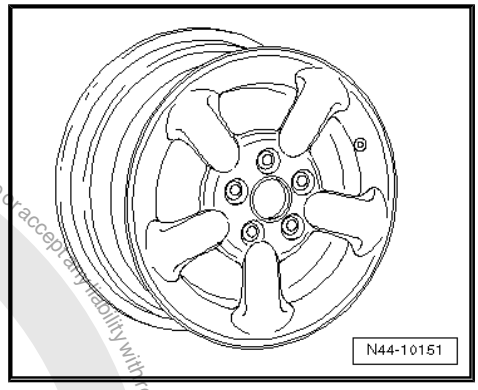

Note

Not permitted for vehicles with 16" brakes.

Size:	7 J x 16
Wheel offset in mm:	59
Wheel load in kg:	690

7M3 601 025 F - Wheel and tyre combination ⇒ page 336

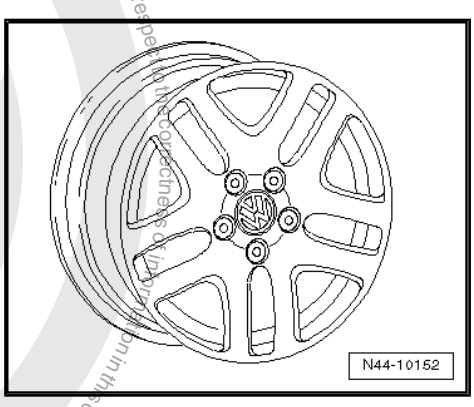

Size:	7 J x 16
Wheel offset in mm:	59
Wheel load in kg:	730

7M3 601 025 G - Wheel and tyre combination ⇒ page 336

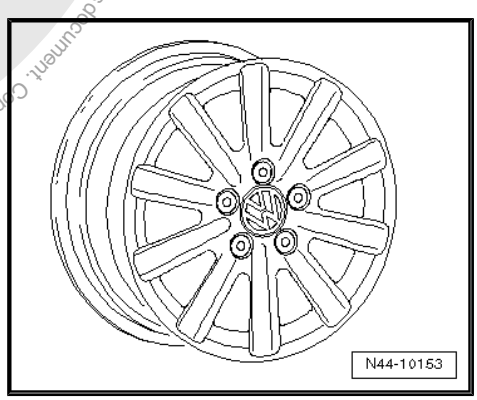

Size:	7 J x 16
Wheel offset in mm:	59
Wheel load in kg:	730

7M3 601 025 H - Wheel and tyre combination ⇒ page 336

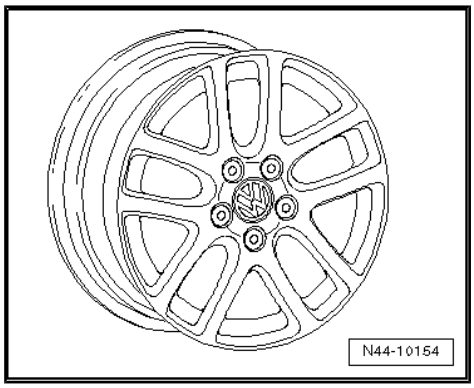

Size:	7 J x 16
Wheel offset in mm:	59
Wheel load in kg:	730

29.5 Sharan, Sharan 4Motion, type 7M from model year 2002 through model year 2006

Attachment to parts certificate 1908/05

Protected by copyright. Copying for private or commercial purposes, in part or in whole, is not permitted unless authorised by Volkswagen AG. Volkswagen AG does not guarantee or accept any liability with respect to the correctness of information in this document. Copyright by Volkswagen AG.
satelettronica

Type Approval No.: e1*98/14*0023*17 to e1*98/14*0023*20

Type Approval No.: e1*2001/116*0023*21 through e1*2001/116*0023*28

Overview

> ⚠ **WARNING**
>
> ***Sharan vehicles from model year 2001 onwards have modified wheel bolts and wheels. Wheel bolts and/or wheels from vehicles through model year 2000 are not permitted!***

Model engine output	Tyres	Tyre size	Wheel	Off-set in mm	Snow chains	Remarks
2.0l 85 kW; 1.9l 66 kW TDI; 1.9l 85 kW TDI; front-wheel drive and 4Motion	Standard tyres	195/60 R 16 C 99/97H	6 J x 16 ⇒ page 342	53	Yes	
1.9l 96 kW TDI front-wheel drive; 1.9l 110 kW TDI front-wheel drive; 1.8l 110 kW Turbo	Modification	205/55 R 16 C 98/96H	6 J x 16 ⇒ page 342	53	No	General notes on winter tyres
		215/55 R 16 95H reinforced/XL	6 J x 16 ⇒ page 342	53	No	
		215/55 R 16 95H reinforced/XL	7 J x 16 ⇒ page 343	59	No	Tyre makes recommended by Volkswagen:
		225/45 R 17 94W reinforced/XL	7 J x 17 ⇒ page 345	54	No	◆ Summer tyres ⇒ page 378 ◆ Winter tyres ⇒ page 396
	Winter tyres	195/60 R 16 C 99/97Q/T	6 J x 16 ⇒ page 342	53	Yes	
		205/55 R 16 94Q/T/H/V reinforced/XL * ⇒ page 341 *** ⇒ page 341	6 J x 16 ⇒ page 342	53	No	* Snow tyres with „V" rating
VR6 150 kW front-wheel drive and 4Motion	Standard tyres	215/55 R 16 95W reinforced/XL	6 J x 16 ⇒ page 342	53	No	** Tyre pressure for VR6 150 kW ⇒ page 342
		215/55 R 16 95W reinforced/XL	7 J x 16 ⇒ page 343	59	No	*** Attention: An entry in the vehicle papers is required!
	Modification	225/45 R 17 94W reinforced/XL	7 J x 17 ⇒ page 345	54	No	
	Winter tyres	195/60 R 16 C 99/97Q/T	6 J x 16 ⇒ page 342	53	Yes	

Protected by copyright. Copying for private or commercial purposes, in part or in whole, is not permitted unless authorised by Volkswagen AG. Volkswagen AG does not guarantee or accept any liability with respect to the correctness of information in this document. Copyright by Volkswagen AG.
satelettronica

Copyright by Volkswagen AG. Volkswagen AG does not guarantee or accept any liability with respect to the correctness of information in this document. Copyright by Volkswagen AG. Reproduced by permission only. Copying for private or commercial purposes, in part or in whole, is not permitted unless authorised by Volkswagen AG.

Model engine output	Tyres	Tyre size	Wheel	Off-set in mm	Snow chains	Remarks
		205/55 R 16 94Q/T/H/V reinforced/XL * ⇒ page 341 ** ⇒ page 341 *** ⇒ page 341	6 J x 16 ⇒ page 342	53	No	

Tyre pressures can be found on the inside of the fuel tank flap or in ⇒ Maintenance ; Booklet 10.1 .

Tyre pressure for VR6 150 kW:

Tyre pressure M + S:	
Part load front:	3.1
Part load rear:	2.8
Full load front:	3.2
Full load rear:	3.4

29.6 Wheel allocation for Sharan, Sharan 4Motion, type 7M from model year 2002 through model year 2006

Explanation of information on wheels

Wheel bolt torque settings ⇒ Running gear, axles, steering - front and four-wheel drive; Rep. gr. 44 ; Wheel bolt torque settings

Pitch circle diameter	112 mm
Number of wheel bolt holes:	5

29.6.1 6 J x 16

Caution

Observe the allocation of wheels and tyres to the respective engines, which are listed in the overview table ⇒ page 341 .

7M3 601 027 D - Wheel and tyre combination ⇒ page 341

For M + S tyres

Size:	6 J x 16
Wheel offset in mm:	53
Wheel load in kg:	690

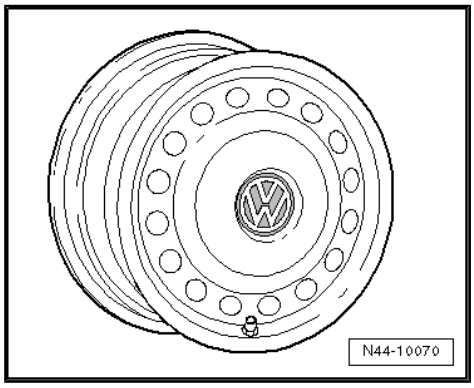

satelettronica

7M3 601 027 E - Wheel and tyre combination ⇒ page 341

Size:	6 J x 16
Wheel offset in mm:	53
Wheel load in kg:	710

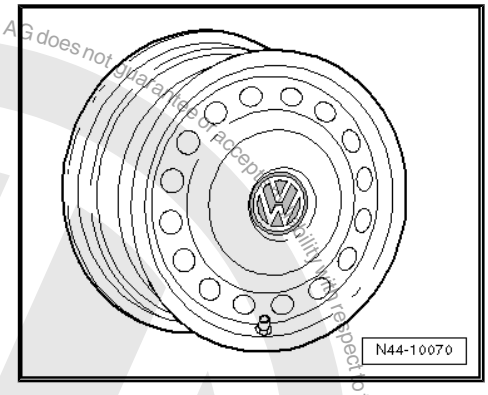

7M3 601 027 F - Wheel and tyre combination ⇒ page 341

Size:	6 J x 16
Wheel offset in mm:	53
Wheel load in kg:	710

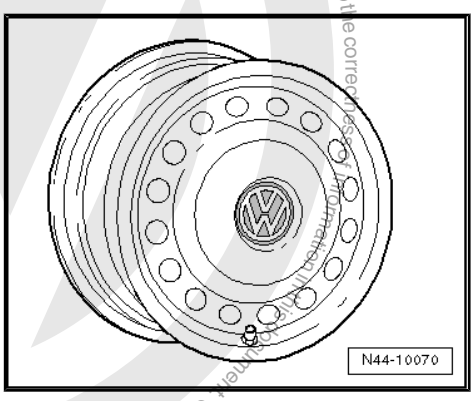

29.6.2 7 J x 16

Caution

Observe the allocation of wheels and tyres to the respective engines, which are listed in the overview table *⇒ page 341* *.*

Note

No snow chains are permitted on 7 J x 16 wheels.

7M0 601 027 J - Wheel and tyre combination ⇒ page 341

Size:	7 J x 16
Wheel offset in mm:	59
Wheel load in kg:	710

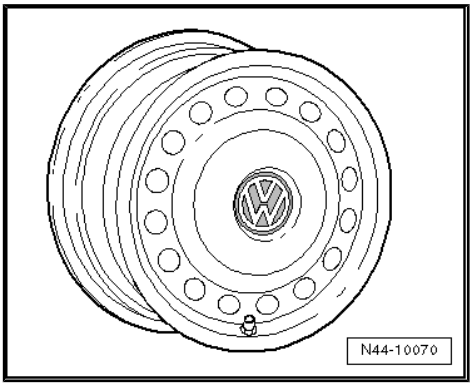

Protected by copyright. Copying for private or commercial purposes, in part or in whole, is not permitted unless authorised by Volkswagen AG. Volkswagen AG does not guarantee or accept any liability with respect to the correctness of information in this document. Copyright by Volkswagen AG.
satelettronica

7M3 601 025 A - Wheel and tyre combination ⇒ page 341

Size:	7 J x 16
Wheel offset in mm:	59
Wheel load in kg:	710

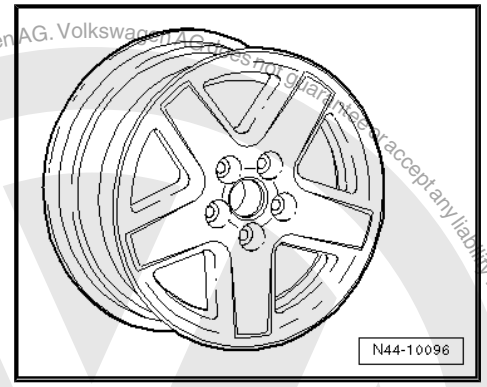

7M3 601 025 E - Wheel and tyre combination ⇒ page 341

Size:	7 J x 16
Wheel offset in mm:	59
Wheel load in kg:	730

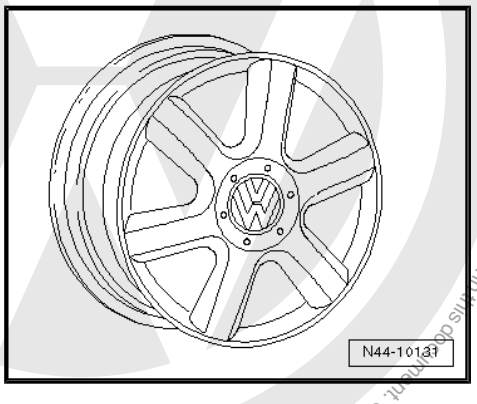

7M3 601 025 D - Wheel and tyre combination ⇒ page 341

Note

Not permitted for vehicles with 16" brakes.

Size:	7 J x 16
Wheel offset in mm:	59
Wheel load in kg:	690

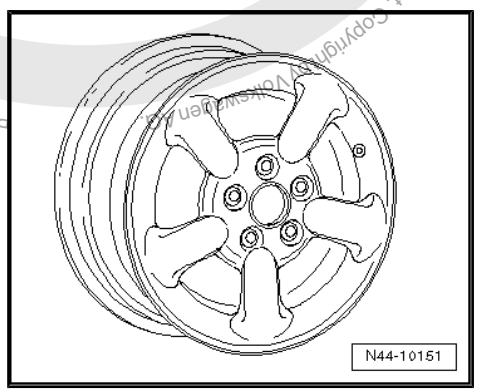

7M3 601 025 F - Wheel and tyre combination ⇒ page 341

Size:	7 J x 16
Wheel offset in mm:	59
Wheel load in kg:	730

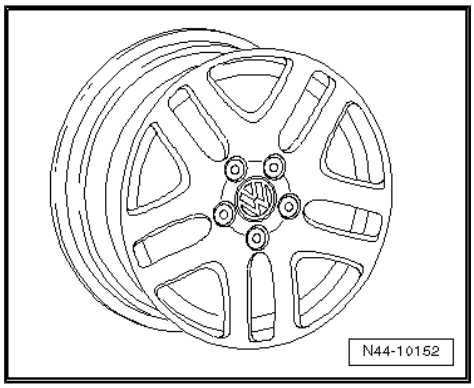

Protected by copyright. Copyright by Volkswagen AG. Volkswagen AG does not guarantee or accept any liability with respect to the correctness of information in this document. Copying for private or commercial purposes, in part or in whole, is not permitted unless authorised by Volkswagen AG.
satelettronica

7M3 601 025 G - Wheel and tyre combination ⇒ page 341

Size:	7 J x 16
Wheel offset in mm:	59
Wheel load in kg:	730

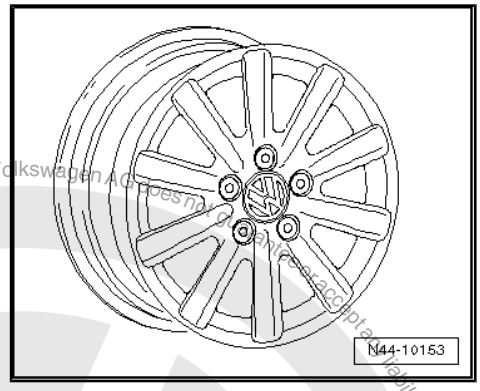

7M3 601 025 H - Wheel and tyre combination ⇒ page 341

Size:	7 J x 16
Wheel offset in mm:	59
Wheel load in kg:	730

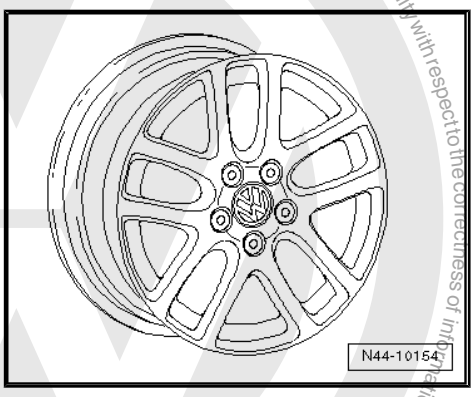

29.6.3 7 J x 17

Caution

Observe the allocation of wheels and tyres to the respective engines, which are listed in the overview table *⇒ page 341* *.*

Note

No snow chains are permitted on 7 J x 17 wheels.

7M3 601 025 J - Wheel and tyre combination ⇒ page 341

Size:	7 J x 17
Wheel offset in mm:	54
Wheel load in kg:	690

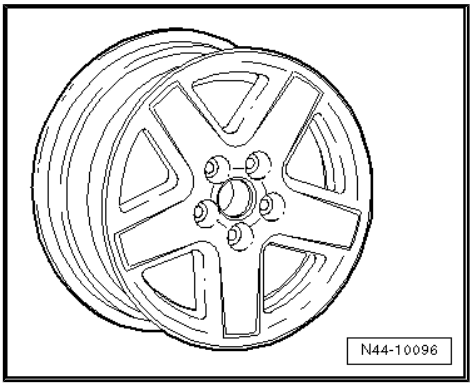

Protected by copyright. Copying for private or commercial purposes, in part or in whole, is not permitted unless authorised by Volkswagen AG. Volkswagen AG does not guarantee or assume any liability with respect to the correctness of information in this document. Copyright by Volkswagen AG.
satelettronica

7M3 601 025 K - Wheel and tyre combination ⇒ page 341

Size:	7 J x 17
Wheel offset in mm:	54
Wheel load in kg:	690

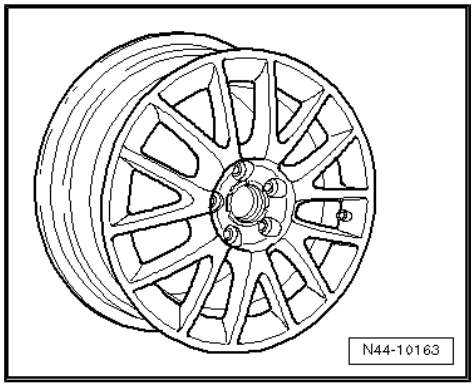

Protected by copyright. Copying for private or commercial purposes, in part or in whole, is not permitted unless authorised by Volkswagen AG. Volkswagen AG does not guarantee or accept any liability with respect to the correctness of information in this document. Copyright by Volkswagen AG.

satelettronica

30 Touareg from model year 2003

General

Volkswagen vehicles are built according to the latest findings in safety engineering. To keep it that way, we recommend the use of genuine Volkswagen spare parts only. You can recognise this by the VW Audi logo and by the part number. It has been established that these parts are reliable, safe and suitable.

Despite constant appraisal of the market, we cannot assess other products on these points, even when in isolated cases they have been passed by official inspectors or have been granted official approval. Therefore, we cannot, of course, assume any liability if these products are installed.

WARNING

The products from Volkswagen genuine parts and Votex genuine accessories may differ in fitting requirements, torque specifications and so on.

Always follow the respective fitting and operating instructions.

The wheel and tyre combinations or changes listed in the vehicle tables refer exclusively to Volkswagen Genuine wheels. Approval of wheel and tyre combinations or a change to wheels from the accessories trade is not possible with the parts certificate attached here.

WARNING

The fitting instructions and torque specifications for wheels from Votex genuine accessories may differ from those intended for wheels from Volkswagen genuine parts.

Therefore, always observe the torque settings for the wheel bolts as well as the respective fitting and operating instructions.

30.1 Touareg, type 7L from model year 2003 through model year 2006

Attachment to parts certificate 1904/05

Type Approval No.: e1*2001/116*0203*00 through e1*2001/116*0203*10

Overview

Model engine output	Tyres	Tyre size	Wheel	Off-set in mm	Snow chains	Remarks
R5 TDI 2.5l 120 kW; R5 TDI 2.5l 128 kW diesel engines	Standard tyres	235/65 R 17 108V	$7^1/_2$ J x 17 ⇒ page 351	55	Yes	16" or 17" wheels can only be fitted on vehicles with 16" or 17" brake systems, respectively.
	Modification	255/60 R 17 106V	$7^1/_2$ J x 17 ⇒ page 351	55	Yes	
		255/55 R 18 109V	8 J x 18 ⇒ page 351	57	Yes	

satelettronica

Protected by copyright. Copyright by Volkswagen AG. Volkswagen AG does not guarantee or accept any liability with respect to the correctness of information in this document. Copyright by Volkswagen AG. Not permitted unless authorised by Volkswagen AG. Volkswagen AG does not guarantee or accept any liability with respect to the correctness of information in this document. Copyright by Volkswagen AG. Protected by copyright. Copying for private or commercial purposes, in part or in whole, is not permitted unless authorised by Volkswagen AG.

Model engine output	Tyres	Tyre size	Wheel	Off-set in mm	Snow chains	Remarks
		275/45 R 19 108Y	9 J x 19 ⇒ page 353	60	No	
		275/40 R 20 106Y	9 J x 20* ⇒ page 348	60	No	* Not for vehicles with 16" brakes (pitch circle diameter 120 mm).
	Off-road tyres** ⇒ page 348	235/70 R 16 105T/H	7 J x 16 ⇒ page 350	54	Yes	** If off-road tyres (with M+S identification) are used, a sticker in the driver's field of vision making reference to the lower permitted maximum speed according to the speed rating of the tyre (T/H) is required, just as for winter tyres.
		235/60 R 18 107T	8 J x 18 ⇒ page 351	57	Yes	
		255/50 R 19 107V	9 J x 19 ⇒ page 353	60	Yes	Snow chains: We recommend using snow chains on all 4 wheels. Article No. ⇒ page 349
	Winter tyres	235/65 R 17 108T/H	$7^1/_2$ J x 17 ⇒ page 351	55	Yes	
		255/50 R 19 107V	9 J x 19 ⇒ page 353	60	Yes	
V6 3.2l 162 kW; V6 3.2l 177 kW; V8 4.2l 228 kW petrol engines; V6 TDI 3.0l 165 kW; diesel engine	Standard tyres	235/65 R 17 108V	$7^1/_2$ J x 17 ⇒ page 351	55	Yes	Tyre fitting ⇒ page 349 : Before fitting tyres, observe fitting notes in ⇒ Running gear, axles, steering; Rep. gr. 44 ;
	Modification	255/60 R 17 106V	$7^1/_2$ J x 17 ⇒ page 351	55	Yes	
		255/55 R 18 109V	8 J x 18 ⇒ page 352	57	Yes	
		275/45 R 19 108Y	9 J x 19 ⇒ page 354	60	No	
		275/40 R 20 106Y	9 J x 20 ⇒ page 356	60	No	
		275/40 R 20 106Y*** ⇒ page 348	$9^1/_2$ J x 20 ⇒ page 356	52	No	*** The 275/40 R 20 106Y tyre is permitted on the $9^1/_2$ J x 20 ET 52 rim only if the stated condtion ⇒ page 357 is fulfilled.

satelettronica

Model engine output	Tyres	Tyre size	Wheel	Off-set in mm	Snow chains	Remarks
	Off-road tyres** ⇒ page 348	235/60 R 18 107T	8 J x 18 ⇒ page 352	57	Yes	
		255/50 R 19 107V	9 J x 19 ⇒ page 354	60	Yes	
	Winter tyres	235/65 R 17 108T/H	7 1/2 J x 17 ⇒ page 351	55	Yes	General notes on winter tyres
		235/60 R 18 107H	8 J x 18 ⇒ page 352	57	Yes	Tyre makes recommended by Volkswagen:
		255/50 R 19 107V	9 J x 19 ⇒ page 354	60	Yes	◆ Summer tyres ⇒ page 379 ◆ All-season tyres ⇒ page 385
V10 TDI 5.0l 230 kW diesel engine; W12 6.0l 331 kW petrol engine	Standard tyres	255/55 R 18 109Y	8 J x 18 ⇒ page 352	57	Yes	◆ Winter tyres ⇒ page 396 ◆ Off-road tyres ⇒ page 397
	Modification	275/45 R 19 108Y	9 J x 19 ⇒ page 355	60	No	
		275/40 R 20 106Y	9 J x 20 ⇒ page 356	60	No	
		275/40 R 20 106Y * ⇒ page 348	9 1/2 J x 20 ⇒ page 356	52	No	
	Off-road tyres** ⇒ page 348	235/60 R 18 107T	8 J x 18 ⇒ page 352	57	Yes	
		255/50 R 19 107V	9 J x 19 ⇒ page 355	60	Yes	
	Winter tyres	235/60 R 18 107H	8 J x 18 ⇒ page 352	57	Yes	
		255/50 R 19 107V	9 J x 19 ⇒ page 355	60	Yes	

Tyre pressures can be found on the inside of the fuel tank flap or in ⇒ Maintenance ; Booklet 17.1 .

– If the vehicle has a tyre pressure monitoring system, check remaining battery life of the tyre pressure sensors with ⇒ Vehicle diagnostic tester before fitting tyres.

The snow chains listed below are permitted only in conjunction with the wheel and tyre combinations listed next to them!

Chain manufacturer Article No.	Accessories part No.	Tyre size	Wheel
Rud	-	235/65 R 17 108T/H	7 1/2 J x 17 ET 55

satelettronica

Chain manufacturer Article No.	Accessories part No.	Tyre size	Wheel
4715224		235/60 R 18 107T/H	8 J x 18 ET 57
Rud	-	255/60 R 17 106V	$7^1/_2$ J x 17 ET 55
4715225		255/55 R 18 109Y	8 J x 18 ET 57
Votex	000 091 386 L	235/65 R 17 108T/H	$7^1/_2$ J x 17 ET 55
		235/60 R 18 107T/H	8 J x 18 ET 57
Votex	000 091 386 M	255/60 R 17 106V	$7^1/_2$ J x 17 ET 55
		255/55 R 18 109Y	8 J x 18 ET 57

30.2 Tyre allocation for Touareg, type 7L from model year 2003 through model year 2006

Explanation of information on wheels

Tightening torques for wheel bolts ⇒ Running gear, axles, steering; Rep. gr. 44

Number of wheel bolt holes: 5

Note

Currently, no steel wheel with a pitch circle diameter of 130 mm is available for the Touareg. Use the listed wheels with a pitch circle diameter of 130 mm with the sizes stated in the tyres table for winter tyres as well.

30.2.1 7 J x 16

Caution

Observe the allocation of wheels and tyres to the respective engines, which are listed in the overview table ⇒ page 347 .

R5 TDI 2.5l 120 kW; R5 TDI 2.5l 128 kW

7L6 601 027 - Wheel and tyre combination ⇒ page 348

Size:	7 J x 16
Wheel offset in mm:	54
Wheel load in kg:	875
Pitch circle diameter	120

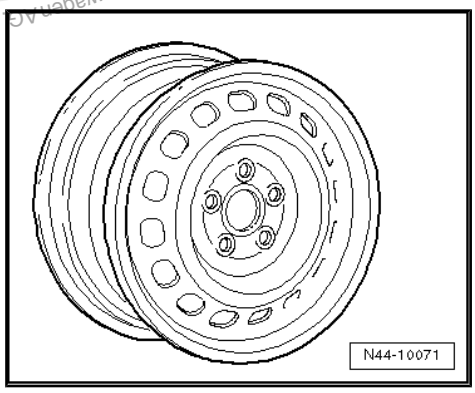

Protected by copyright. Copyright by Volkswagen AG. Volkswagen AG does not guarantee or accept any liability with respect to the correctness of information in this document. Copyright by Volkswagen AG. Reproduction in part or in whole, is not permitted unless authorised. For private or commercial purposes only.
satelettronica

Protected by copyright. Copyright by Volkswagen AG. Volkswagen AG does not guarantee or accept any liability with respect to the correctness of information in this document. Copyright by Volkswagen AG. Reproduction, in whole or in part or otherwise, is not permitted unless authorised by Volkswagen AG.

30.2.2 7 1/2 J x 17

Caution

Observe the allocation of wheels and tyres to the respective engines, which are listed in the overview table ⇒ page 347 *.*

R5 TDI 2.5l 120 kW; R5 TDI 2.5l 128 kW

7L6 601 025 E - Wheel and tyre combination ⇒ page 347

Size:	7 1/2 J x 17
Wheel offset in mm:	55
Wheel load in kg:	875
Pitch circle diameter	120

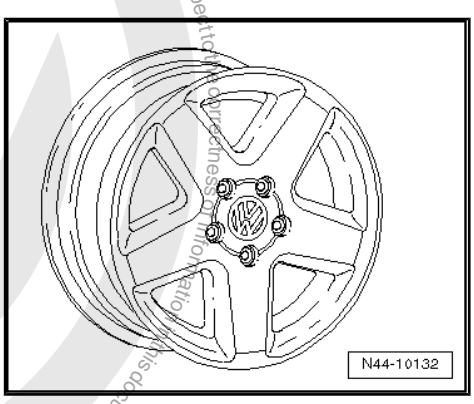

V6 3.2l 162 kW; V6 3.2l 177 kW; V6 TDI 3.0l 165 kW; V8 4.2l 228 kW

7L6 601 025 A - Wheel and tyre combination ⇒ page 348

Size:	7 1/2 J x 17
Wheel offset in mm:	55
Wheel load in kg:	875
Pitch circle diameter	130

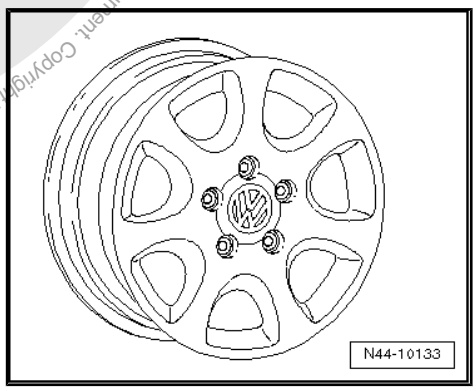

7L6 601 025 B - Wheel and tyre combination ⇒ page 348

Size:	7 1/2 J x 17
Wheel offset in mm:	55
Wheel load in kg:	875
Pitch circle diameter	130

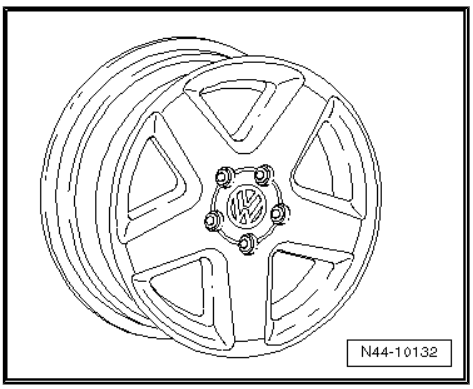

30.2.3 8 J x 18

Caution

Observe the allocation of wheels and tyres to the respective engines, which are listed in the overview table ⇒ page 347 *.*

satelettronica

R5 TDI 2.5l 120 kW; R5 TDI 2.5l 128 kW

7L6 601 025 L - Wheel and tyre combination ⇒ page 347

Size:	8 J x 18
Wheel offset in mm:	57
Wheel load in kg:	900
Pitch circle diameter	120

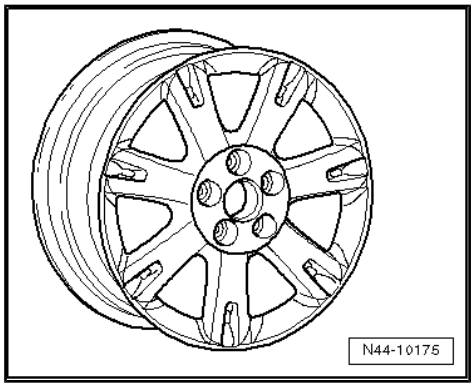

V6 3.2l 162 kW; V6 3.2l 177 kW; V6 TDI 3.0l 165 kW; V8 4.2l 228 kW

7L6 601 025, 7L6 601 025 T - Wheel and tyre combination
⇒ page 348

Size:	8 J x 18
Wheel offset in mm:	57
Wheel load in kg:	900
Pitch circle diameter	130

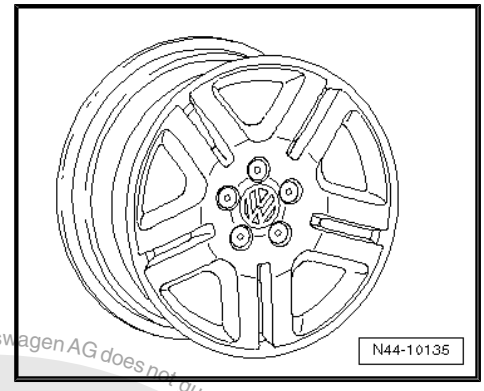

7L6 601 025 C, 7L6 601 025 AA - Wheel and tyre combination
⇒ page 348

Size:	8 J x 18
Wheel offset in mm:	57
Wheel load in kg:	900
Pitch circle diameter	130

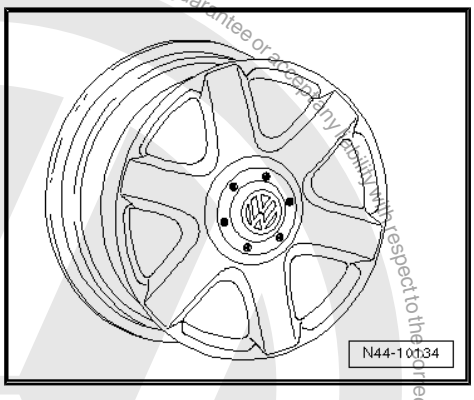

7L6 601 025 K - Wheel and tyre combination ⇒ page 348

Size:	8 J x 18
Wheel offset in mm:	57
Wheel load in kg:	900
Pitch circle diameter	130

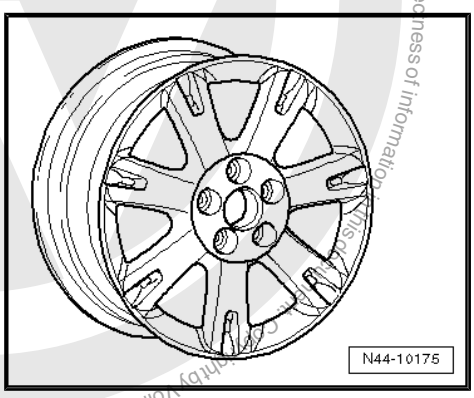

V10 TDI 5.0l 230 kW; W12 6.0l 331 kW

Protected by copyright. Copying for private or commercial purposes, in part or in whole, is not permitted unless authorised by Volkswagen AG. Volkswagen AG does not guarantee or accept any liability with respect to the correctness of information. © Copyright by Volkswagen AG.
satelettronica

7L6 601 025 C, 7L6 601 025 AA - Wheel and tyre combination ⇒ page 349

Size:	8 J x 18
Wheel offset in mm:	57
Wheel load in kg:	900
Pitch circle diameter	130

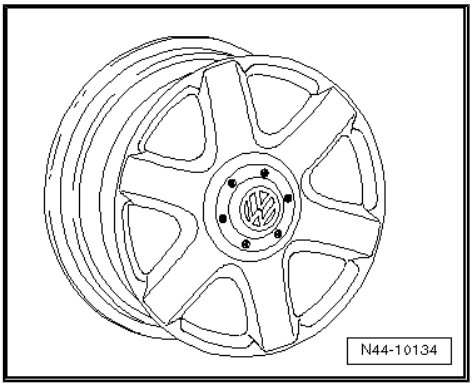

7L6 601 025 K - Wheel and tyre combination ⇒ page 349

Size:	8 J x 18
Wheel offset in mm:	57
Wheel load in kg:	900
Pitch circle diameter	130

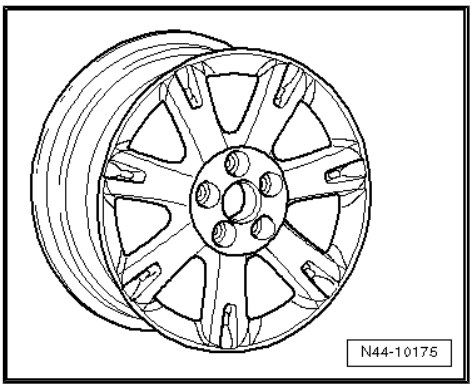

30.2.4 9 J x 19

Caution

Observe the allocation of wheels and tyres to the respective engines, which are listed in the overview table ⇒ page 347 *.*

R5 TDI 2.5l 120 kW; R5 TDI 2.5l 128 kW

7L6 601 025 N - Wheel and tyre combination ⇒ page 348

Size:	9 J x 19
Wheel offset in mm:	60
Wheel load in kg:	900
Pitch circle diameter	120

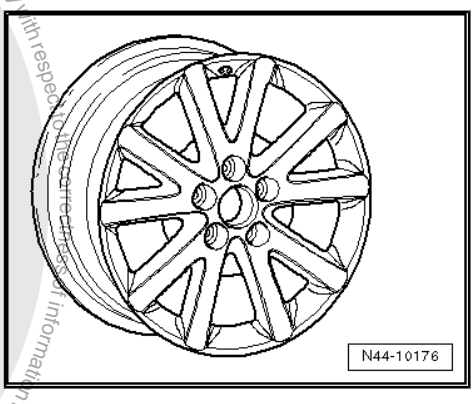

Protected by copyright. Copying for private or commercial purposes, in part or whole, is not permitted unless authorised by Volkswagen AG. Volkswagen AG does not guarantee or accept any liability with respect to the correctness of information in this document. Copyright by Volkswagen AG.
satelettronica

7L6 601 025 AC - Wheel and tyre combination ⇒ page 348

Size:	9 J x 19
Wheel offset in mm:	60
Wheel load in kg:	900
Pitch circle diameter	120

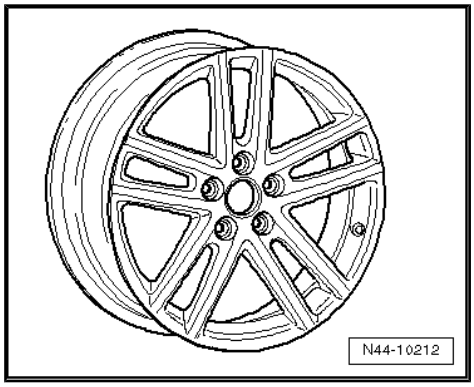

7L6 601 025 AB - Wheel and tyre combination ⇒ page 348

Size:	9 J x 19
Wheel offset in mm:	60
Wheel load in kg:	900
Pitch circle diameter	120

V6 3.2l 162 kW; V6 3.2l 177 kW; V6 TDI 3.0l 165 kW; V8 4.2l 228 kW

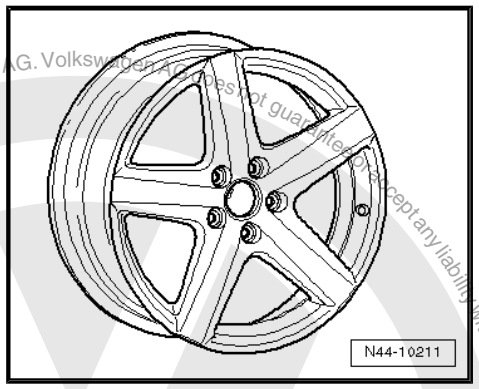

7L6 601 025 D - Wheel and tyre combination ⇒ page 348

Size:	9 J x 19
Wheel offset in mm:	60
Wheel load in kg:	900
Pitch circle diameter	130

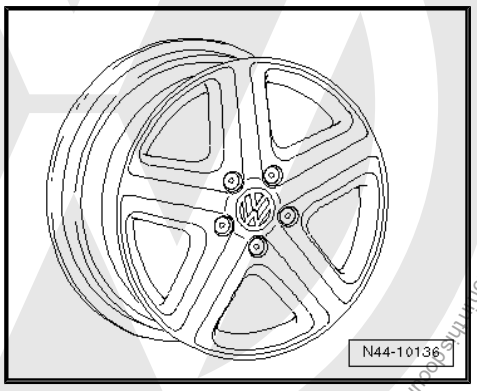

7L6 601 025 S - Wheel and tyre combination ⇒ page 348

Size:	9 J x 19
Wheel offset in mm:	60
Wheel load in kg:	900
Pitch circle diameter	130

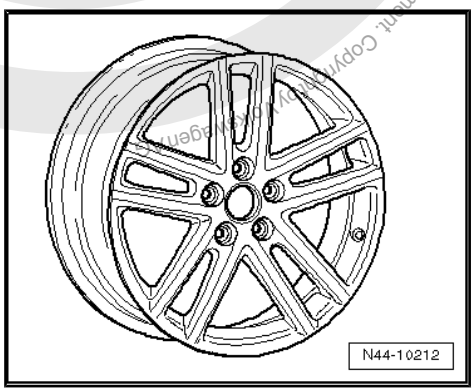

Protected by copyright. Copying for private or commercial purposes, in part or in whole, is not permitted unless authorised by Volkswagen AG. Volkswagen AG does not guarantee or accept any liability with respect to the correctness of information. Copyright by Volkswagen AG.
satelettronica

7L6 601 025 R - Wheel and tyre combination ⇒ page 348

Size:	9 J x 19
Wheel offset in mm:	60
Wheel load in kg:	900
Pitch circle diameter	130

V10 TDI 5.0l 230 kW; W12 6.0l 331 kW

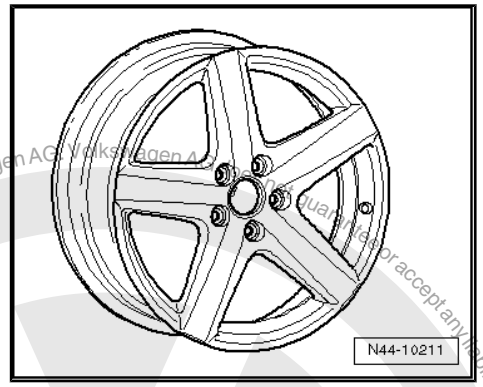

7L6 601 025 D - Wheel and tyre combination ⇒ page 349

Size:	9 J x 19
Wheel offset in mm:	60
Wheel load in kg:	900
Pitch circle diameter	130

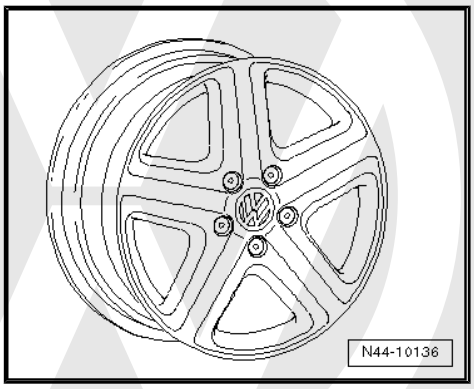

7L6 601 025 S - Wheel and tyre combination ⇒ page 349

Size:	9 J x 19
Wheel offset in mm:	60
Wheel load in kg:	900
Pitch circle diameter	130

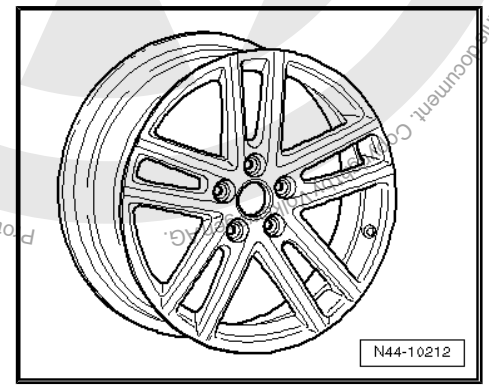

7L6 601 025 Q - Wheel and tyre combination ⇒ page 349

Size:	9 J x 19
Wheel offset in mm:	60
Wheel load in kg:	900
Pitch circle diameter	130

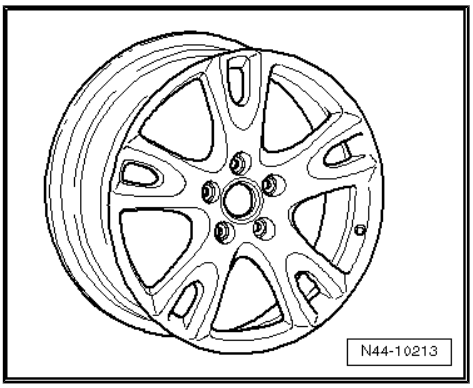

Protected by copyright. Copying for private or commercial purposes, in part or in whole, is not permitted unless authorised by Volkswagen AG. Volkswagen AG does not guarantee or accept any liability with respect to the correctness of information in this document. Copyright by Volkswagen AG.
satelettronica

7L6 601 025 R - Wheel and tyre combination ⇒ page 349

Size:	9 J x 19
Wheel offset in mm:	60
Wheel load in kg:	900
Pitch circle diameter	130

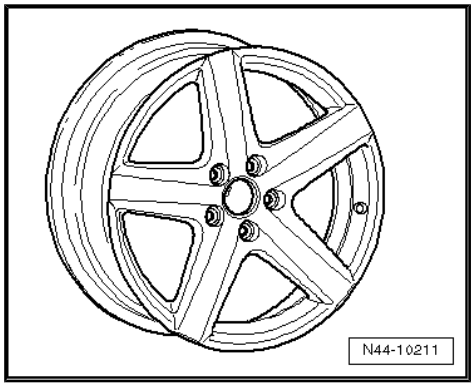

30.2.5 9 J x 20

Caution

Observe the allocation of wheels and tyres to the respective engines, which are listed in the overview table ⇒ page 347 *.*

V6 3.2l 162 kW; V6 3.2l 177 kW; V6 TDI 3.0l 165 kW; V8 4.2l 228 kW

V10 TDI 5.0l 230 kW; W12 6.0l 331 kW

7L6 601 025 P - Wheel and tyre combination ⇒ page 348

Size:	9 J x 20
Wheel offset in mm:	60
Wheel load in kg:	900
Pitch circle diameter	130

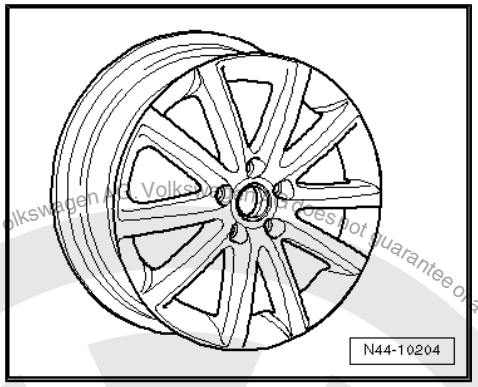

7L6 601 025 Q - Wheel and tyre combination ⇒ page 348

Size:	9 J x 20
Wheel offset in mm:	60
Wheel load in kg:	900
Pitch circle diameter	130

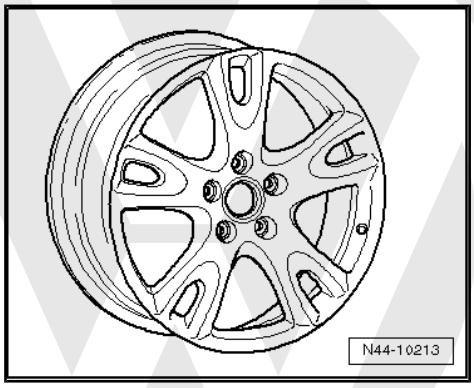

30.2.6 $9^1/_2$ J x 20

Caution

Observe the allocation of wheels and tyres to the respective engines, which are listed in the overview table ⇒ page 347 *.*

Protected by copyright. Copying for private or commercial purposes, in part or in whole, is not permitted unless authorised by Volkswagen AG. Volkswagen AG does not guarantee or accept any liability with respect to the correctness of information in this document. Copyright by Volkswagen AG.
satelettronica

Caution

Fitting the $9^1/_2$ J x 20-wheel is possible only under the following conditions:

- *The wheel housings and wings must be widened by Volkswagen Individual ⇒ Electronic parts catalogue „ETKA“.*

V6 3.2l 162 kW; V6 3.2l 177 kW; V6 TDI 3.0l 165 kW; V8 4.2l 228 kW

V10 TDI 5.0l 230 kW; W12 6.0l 331 kW

7L9 601 025 - Wheel and tyre combination ⇒ page 348

Size:	$9^1/_2$ J x 20
Wheel offset in mm:	52
Wheel load in kg:	900
Pitch circle diameter	130

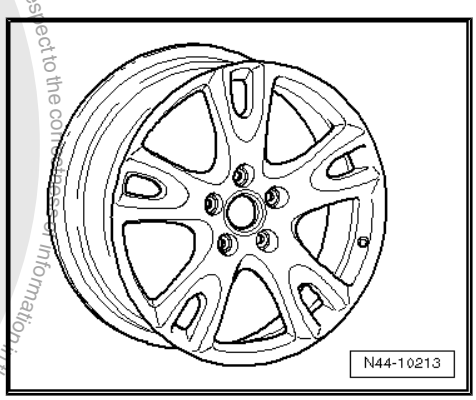

Protected by copyright. Copying for private or commercial purposes, in part or in whole, is not permitted unless authorised by Volkswagen AG. Volkswagen AG does not guarantee or accept any liability with respect to the correctness of information in this document. Copyright by Volkswagen AG.
satelettronica

31 Breakdown set for VW Vehicles

Model	Spare part No. tyre sealant	Spare part No. compressor
Lupo 3L, type 6E; Lupo FSI, type 6E; Lupo GTI, type 6ES	8D0 012 619	8D0 012 615
Polo, type 9N	8D0 012 619	8D0 012 615
Polo Fun, type 9N	8D0 012 619	8D0 012 615
Golf R32, type 1J	8D0 012 619	8D0 012 615
New Beetle Cabriolet, type 1Y	8D0 012 619	8D0 012 615
Touran, type 1T	8D0 012 619	8D0 012 615 A/B
Golf, type 1K	8D0 012 619	8D0 012 615
Passat, type 3C	8D0 012 619 A	8D0 012 615 C
Phaeton, type 3D	3D0 012 619	3D0 012 143
Sharan, type 7M	7M3 012 619	7M3 012 143
	Some Sharan vehicles from model year 2002 with a high total weight are equipped with a breakdown set.	

Protected by copyright. Copying for private or commercial purposes, in part or in whole, is not permitted unless authorised by Volkswagen AG. Volkswagen AG does not guarantee or accept any liability with respect to the correctness of information in this document. Copyright by Volkswagen AG.
satelettronica

32 Temporary spare tyres and wheels for VW vehicles

Observe the notes on the use of temporary spare wheels

	Wheel		Tyres		
Model	**Size**	**Spare part No.**	**Size**	**Make**	**Tread**
Lupo,type 6X	3 1/2 J x 14 ET 42	6N0 601 025 G	T105/70 R 14 84M	Continental Michelin	CST 17 TEX
Polo,type 6N	3 1/2 J x 14 ET 42 3 1/2 J x 14 ET 45	6N0 601 025 G 1H0 601 027 C	T105/70 R 14 84M	Continental Michelin Firestone	CST 17 TEX Temporary spare
Polo Classic, type 6KV; Polo estate, type 6KV	3 1/2 J x 14 ET 38	1L0 601 025 D	T105/70 R 14 84M	Continental Michelin Firestone	CST 17 TEX Temporary spare
Golf, Golf Cabriolet, Type 1HX0 With 4 holes (basic running gear)	3 1/2 J x 14 ET 40 3 1/2 J x 14 ET 45	357 601 0257 D 1H0 601 027 C	T105/70 R 14 84M	Continental Michelin Firestone	CST 17 TEX Temporary spare
Golf Cabriolet, type 1E	3 1/2 J x 14 ET 45	1H0 601 027 C	T105/70 R 14 84M	Continental Michelin Firestone	CST 17 TEX Temporary spare
Golf, type 1HX0/1H with 5 holes (Plus running gear) Vento, type 1HX0/1H with 4 holes Golf estate, type 1HX0/1H with 4 holes	3 1/2 J x 15 ET 38 3 1/2 J x 15 ET 40	1H0 601 027 H 535 601 025 A	T115/70 R 15 90M	Continental Michelin Goodyear	CST 17 TEX HPS
Golf Syncro, type 1HX1 Golf Estate Syncro, type 1HX1 with 4 holes	3 1/2 J x 15 ET 40	535 601 025 A	T125/75 R 15 95M	Continental	CST 17
Golf, type 1HX0/1H GTI, 16V, VR6 from 01.95 Vento VR6, type 1HX0/1H	3 1/2 J x 16 ET 38	3A0 601 025	T125/70 R 16 96M	Continental	CST 17
Golf VR6 Syncro, type 1HX1 Golf Estate VR6 Syncro, type 1HX1	3 1/2 J x 16 ET 38	3A0 601 025	T125/80 R 15 95M	Continental	CST 17
Golf estate, type 1HX0/1H with 4 holes	3 1/2 J x 15 ET 40	1H0 601 025 A	T115/70 R 15 90M	Continental	CST 17

Volkswagen AG. Volkswagen AG does not guarantee or accept any liability with respect to the correctness of information in this document. Copyright by Volkswagen AG. Reproduction, in part or in whole is not permitted unless authorised by Volkswagen AG. Copying for private or commercial purposes, in part or in whole, is not permitted unless authorised by Volkswagen AG.

satelettronica

	Wheel		Tyres		
Model	**Size**	**Spare part No.**	**Size**	**Make**	**Tread**
				Michelin Goodyear	TEX HPS
Golf, Bora, Golf Estate, Bora Estate, type 1J front and four-wheel drive	3 1/2 J x 18 ET 38	1J0 601 027 M	T125/70 R 18 99M	Continental	CST 17
New Beetle, type 9C	3 1/2 J x 18 ET 38	1J0 601 027 M	T125/70 R 18 99M	Continental	CST 17
New Beetle RSi, type 9CR	3 1/2 J x 18 ET 38	1J0 601 027 M	T125/70 R 18 99M	Continental	CST 17
Passat, type 35I	3 1/2 J x 15 ET 40	535 601 025 A	T125/70 R 15 95M	Continental Michelin Firestone	CST 17 TEX Temporary spare
Passat Syncro, type 35I-299	3 1/2 J x 15 ET 40	535 601 025 A	T125/80 R 15 95M	Continental	CST 17
Passat, type 35I 81 kW TDI, 16V and VR6	3 1/2 J x 16 ET 38	3A0 601 025	T125/70 R 16 96M	Continental	CST 17
Passat, type 3B	4.00 B x 15 ET 45	447 601 025 G/S	T125/90 R 15 95M	Michelin	TEX
Passat from model year 2001, Type 3BG	3 1/2 J x 18 ET 40	3B7 601 027 A	T125/70 R 18 99M	Continental	CST 17
	Some vehicles have a 205/55 R 16 tyre on a 7 J x 16 ET 37 steel rim as a spare wheel. Observe notes on the use of temporary spare wheels.				
Passat W8, type 3BS	3 1/2 J x 18 ET 40	3B7 601 027 A	T125/70 R 18 99M	Continental	CST 17
Touareg, type 7L pitch circle 120 mm	6 1/2 J x 17 ET 40	7L6 601 027 B	195/80 R 17 106P folding tyre	Vredestein	Spacemaster
Touareg, type 7L pitch circle 130 mm	6 1/2 J x 17 ET 40	7L6 601 027 V6 /V8 engine	195/80 R 17 106P folding tyre	Vredestein	Spacemaster
	6 1/2 J x 18 ET 53	7L6 601 027 A V10 engine	195/75 R 18 106P folding tyre	Vredestein	Spacemaster
Touran, type 1T	3 1/2 J x 18 ET 25 1/2	1K0 601 027 B	T125/70 R 18 99M	Goodyear	Conv. Spare
Golf, type 1K	3 1/2 J x 18 ET 25 1/2	1K0 601 027 B	T125/70 R 18 99M	Goodyear Continental	Conv. Spare CST 17

Protected by copyright. Copying for private or commercial purposes, in part or in whole, is not permitted unless authorised by Volkswagen AG. Volkswagen AG does not guarantee or accept any liability with respect to the correctness of information in this document. Copyright by Volkswagen AG.
satelettronica

33 Approved makes of summer tyres for initial fitting

33.1 Summer tyres for Lupo 3L from model year 1999

Tyre size	Make	Tread pattern
155/65 R 14 75T	Bridgestone	B 381 Ecopia

33.2 Summer tyres for Lupo FSI from model year 1999

Tyre size	Make	Tread pattern
175/60 R 14 79H	Dunlop	SP 10A

33.3 Summer tyres for Lupo GTI from model year 1999

Tyre size	Make	Tread pattern
205/45 R 15 81V	Dunlop	SP 2000 E

33.4 Summer tyres for Lupo from model year 1999 through model year 2005

Tyre size	Make	Tread pattern
155/70 R 13 75T	Continental	Eco Contact EP
	Firestone	F 580
	Michelin	XT1
	Hankook	K701
175/65 R 13 80T	Continental	Eco Contact EP
	Firestone	F 580
	Michelin	XT1
185/55 R 14 80H	Continental	Eco Contact CP
	Firestone	FH 700 F
	Michelin	XH1
	Dunlop	SP Sport 2000 E
195/45 R 15 78V	Michelin	Pilot SX GT
	Dunlop	SP Sport 2040 E
	Pirelli	P 6000

33.5 Summer tyres for Fox from model year 2006

Tyre size	Make	Tread pattern
165/70 R 14 81T	Continental	CEC CP
	Firestone	F 590
	Goodyear	GT 2E
	Michelin	XT1
	Dunlop	SP 10A
	Pirelli	P 4

Volkswagen AG. Volkswagen AG does not guarantee or accept any liability with respect to the correctness of information in this document. Copyright by Volkswagen AG.
Protected by copyright. Copying for private or commercial purposes, in part or in whole, is not permitted unless authorised by Volkswagen AG.
satelettronica

Protected by copyright. Copying for private or commercial purposes, in part or in whole, is not permitted unless authorised by Volkswagen AG. Volkswagen AG does not guarantee or accept any liability with respect to the correctness of information in this document. Copyright by Volkswagen AG.

Tyre size	Make	Tread pattern
185/60 R 14 82T	Continental	CEC CP
	Dunlop	SP 10E
	Firestone	F 590
	Michelin	XT 2
	Pirelli	P 6
	Matador	MP 42
	Kumho	PM 769
185/60 R 14 82H	Continental	CEC CP
	Continental	Premium Co
	Dunlop	SP 2000 E
	Firestone	F 590
	Goodyear	NCT 5
	Michelin	XH 1
	Pirelli	P 6
	Kumho	PM 769
195/55 R 15 85V	Michelin	Pilot Primacy
	Dunlop	SP 2000 E
	Goodyear	NCT 5
	Pirelli	P 6
	Firestone	FH 700 FS

33.6 Summer tyres for Polo from model year 1995 through model year 2002

Tyre size	Make	Tread pattern
155/70 R 13 75T	Continental	Eco Contact EP
	Firestone	F 580
	Michelin	Energy XT1
175/65 R 13 80T	Continental	Eco Contact EP
	Firestone	F 580
	Michelin	MXT Energy XT1
185/55 R 14 79H	Continental	CH 90
	Firestone	FH 700 FS
	Michelin	SX GT
	Dunlop	SP Sport 2000 E
185/55 R 14 80H	Continental	Eco Contact CP
	Firestone	FH 700 F
	Michelin	XH1
	Dunlop	SP Sport 2000 E
195/45 R 15 78V	Michelin	Pilot SX GT
	Dunlop	SP Sport 2040 E
	Pirelli	P 6000

satelettronica

33.7 Summer tyres for Polo from model year 2002

Tyre size	Make	Tread pattern
155/80 R 13 79T	Firestone	F 590
	Hankook	K 701
165/70 R 14 81T	Continental	CEC CP
	Firestone	F 590
	Goodyear	GT 2E
	Michelin	XT1
	Dunlop	SP 10A
	Pirelli	P 4
185/60 R 14 82T	Continental	CEC CP
	Dunlop	SP 10E
	Firestone	F 590
	Michelin	XT 2
	Pirelli	P 6
	Matador	MP 42
	Kumho	PM 769
185/60 R 14 82H	Continental	CEC CP
	Continental	Premium Co
	Dunlop	SP 2000 E
	Firestone	F 590
	Goodyear	NCT 5
	Michelin	XH 1
	Pirelli	P 6
	Kumho	PM 769
195/50 R 15 82V	Bridgestone	Turanza ER 30
	Dunlop	SP 2020 E
	Goodyear	NCT 5
	Michelin	Primacy
	Pirelli	P 6000
195/55 R 15 85V	Michelin	Pilot Primacy
	Dunlop	SP 2000 E
	Goodyear	NCT 5
	Pirelli	P 6
	Firestone	FH 700 FS
205/45 R 16 83W	Bridgestone	Turanza ER 30
	Continental	Sport Contact
	Dunlop	SP 2000 E
	Hankook	Optimo K406
	Michelin	Primacy

33.8 Summer tyres for Polo Saloon from model year 2004

Tyre size	Make	Tread pattern
155/80 R 13 79T	Firestone	F 590
	Hankook	K 701

Protected by copyright. Copying for private or commercial purposes, in part or in whole, is not permitted unless authorised by Volkswagen AG. Volkswagen AG does not guarantee or accept any liability with respect to the correctness of information in this document. Copyright by Volkswagen AG.

satelettronica

Tyre size	Make	Tread pattern
165/70 R 14 81T	Continental	CEC CP
	Firestone	F 590
	Goodyear	GT 2E
	Michelin	XT1
	Dunlop	SP 10A
185/60 R 14 82T	Continental	CEC CP
	Dunlop	SP 10E
	Firestone	F 590
	Michelin	XT 2
	Kumho	PM 769
185/60 R 14 82H	Continental	CEC CP
	Continental	Premium Co
	Dunlop	SP 2000 E
	Firestone	F 590
	Goodyear	NCT 5
	Michelin	XH 1
	Kumho	PM 769
195/50 R 15 82V	Bridgestone	Turanza ER 30
	Dunlop	SP 2020 E
	Goodyear	NCT 5
	Michelin	Primacy
	Pirelli	P 6000
195/55 R 15 85V	Michelin	Pilot Primacy
	Dunlop	SP 2000 E
	Goodyear	NCT 5
	Firestone	FH 700 FS
205/45 R 16 83W	Bridgestone	Turanza ER 30
	Continental	Sport Contact
	Dunlop	SP 2000 E
	Hankook	Optimo K406
	Michelin	Primacy

Protected by copyright. Copying for private or commercial purposes, in part or in whole, is not permitted unless authorised by Volkswagen AG. Volkswagen AG does not guarantee or accept any liability with respect to the correctness of information in this document. Copyright by Volkswagen AG.

33.9 Summer tyres for Polo Fun from model year 2004

Tyre size	Make	Tread pattern
215/40 ZR 17 83W	Dunlop	SP 9000
215/40 ZR 17 83Y	Goodyear	Eagle F1

33.10 Summer tyres for Polo Classic from model year 1996 through model year 2002

Tyre size	Make	Tread pattern
175/65 R 14 86T	Firestone	F 580
	Michelin	Agillis
185/60 R 14 82T	Continental	Eco Contact EP

satelettronica

Tyre size	Make	Tread pattern
	Michelin	MXT Energy
	Pirelli	P 3000
185/60 R 14 82H	Continental	CH 90
	Dunlop	D8 M2
	Michelin	MXV3A Energy
185/55 R 15 81H	Michelin	MXV3A Energy
	Firestone	FH 700
185/55 R 15 82H	Pirelli	P 6000
	Firestone	FH 700

33.11 Summer tyres for Polo Estate from model year 1998 through model year 2002

Tyre size	Make	Tread pattern
175/65 R 14 86T	Firestone	F 580
	Michelin	Agillis
185/60 R 14 82T	Continental	Eco Contact EP
	Michelin	MXT Energy
	Pirelli	P 3000
185/60 R 14 82H	Continental	CH 90
	Dunlop	D8 M2
	Michelin	MXV3A Energy
185/55 R 15 81H	Michelin	MXV3A Energy
	Firestone	FH 700
185/55 R 15 82H	Pirelli	P 6000
	Firestone	FH 700

33.12 Summer tyres for Golf, Vento from model year 1992 through model year 1998

Tyre size	Make	Tread pattern
175/70 R 13 82T	Continental	CT 22
	Continental	Eco Contact CP
	Michelin	MXT Energy
185/60 R 14 82T	Continental	Eco Contact CP
	Michelin	MXT Energy
	Firestone	F 580
185/60 R 14 82H	Continental	CH 90
	Dunlop	SP Sport D8 M2
	Michelin	MXV3A Energy
195/60 R 14 86H	Continental	CH 90
	Continental	Eco Contact CP
	Michelin	Energy XH 1
195/50 R 15 82V	Continental	CV 90
	Dunlop	SP 2000

Protected by copyright. Copyright by Volkswagen AG.
Copyright by Volkswagen AG. Volkswagen AG does not guarantee or accept any liability with respect to the correctness of information in this document. Copying for private or commercial purposes, in part or in whole, is not permitted unless authorised by Volkswagen AG.
satelettronica

Tyre size	Make	Tread pattern
	Michelin	MXV3A Energy
	Fulda	Y 2000 + A
205/50 R 15 86V	Dunlop	SP Sport 2000
	Michelin	MXV3A Energy
	Firestone	FH 690
	Fulda	Y 2000 + A
205/50 R 15 86W	Michelin	MXV3A Energy
	Dunlop	SP Sport 2000
205/45 R 16 83V/W	Dunlop	SP Sport 2000 E
215/40 R 16 86W (reinforced) Extraload	Dunlop	SP Sport 2040 E

33.13 Summer tyres for Golf Estate from model year 1994 through model year 1998

Tyre size	Make	Tread pattern
175/70 R 13 82T	Continental	CT 22
	Continental	Eco Contact CP
	Michelin	MXT Energy
185/60 R 14 82T	Continental	Eco Contact CP
	Michelin	MXT Energy
	Firestone	F 580
185/60 R 14 82H	Continental	CH 90
	Dunlop	SP Sport D8 M2
	Michelin	MXV3A Energy
195/60 R 14 86H	Continental	CH 90
	Continental	Eco Contact CP
	Michelin	Energy XH 1
195/50 R 15 82V	Continental	CV 90
	Dunlop	SP 2000
	Michelin	MXV3A Energy
	Fulda	Y 2000 + A
205/50 R 15 86V	Dunlop	SP Sport 2000
	Michelin	MXV3A Energy
	Firestone	FH 690
	Fulda	Y 2000 + A
205/50 R 15 86W	Michelin	MXV3A Energy
	Dunlop	SP Sport 2000
205/45 R 16 83V/W	Dunlop	SP Sport 2000 E
215/40 R 16 86W (reinforced) Extraload	Dunlop	SP Sport 2040 E

Protected by copyright. Copyright by Volkswagen AG. Volkswagen AG does not guarantee or accept any liability with respect to the correctness of information in this document. Copyright by Volkswagen AG. Protected by copyright. Copying for private or commercial purposes, in part or in whole, is not permitted unless authorised by Volkswagen AG.
satelettronica

33.14 Summer tyres for Golf Cabriolet, from model year 1994 through model year 1997

Tyre size	Make	Tread pattern
185/60 R 14 82T	Continental	Eco Contact CP
	Michelin	MXT Energy
	Firestone	F 580
185/60 R 14 82H	Continental	CH 90
	Dunlop	SP Sport D8 M2
	Michelin	MXV3A Energy
195/50 R 15 82V	Continental	CV 90
	Dunlop	SP 2000
	Michelin	MXV3A Energy
	Fulda	Y 2000 + A
205/45 R 16 83V/W	Dunlop	SP Sport 2000 E

33.15 Summer tyres for Golf, Golf 4Motion from model year 1998 through model year 2004

Tyre size	Make	Tread pattern	Remarks
175/80 R 14 88T	Michelin	XT 1	
	Firestone	F 580-FS	
	Continental	Eco Contact EP	
	Goodyear	GT2E	
	Dunlop	SP 10 3e	
175/80 R 14 88H	Dunlop	SP Sport 200 E	
	Firestone	F 580	
	Continental	Eco Contact CP	
	Michelin	XH1	
	Toyo	TYJ35	
	Dunlop	SP Sport 200 ULW (ultra light weight)	Low-friction tyres
195/65 R 15 91T	Continental	Eco Contact EP	
	Dunlop	SP 9*E	
	Michelin	XT 2	
	Goodyear	GT 2E	
	Firestone	F 580	
	Pirelli	P 3000	
195/65 R 15 91H	Michelin	XH1	
	Dunlop	SP 200 E	
	Goodyear	NCT 5	
195/65 R 15 91V	Continental	Eco Contact CP	
	Goodyear	NCT 5	
	Michelin	Primacy	
	Dunlop	SP Sport 200 E	
	Pirelli	P 6000	
	Kleber	Dynaxer HP	
	Firestone	FH 680 B	

Protected by copyright. Copying for private or commercial purposes, in part or in whole, is not permitted unless authorised by Volkswagen AG. Volkswagen AG does not guarantee or accept any liability with respect to the correctness of information in this document. Copyright by Volkswagen AG
satelettronica

Tyre size	Make	Tread pattern	Remarks
	Dunlop	SP Sport 200 ULW (ultra light weight)	Low-friction tyres
205/55 R 16 91W	Continental	Sport Contact	These tyres are permitted only in conjunction with modified full-size hubcaps, in use from 11.99;
	Dunlop	SP Sport 2000 E	Also see ⇒ Technical Service Handbook
	Bridgestone	ER 30	
	Michelin	MXM	
	Goodyear	NCT 5	
	Pirelli	P 6000	
225/45 R 17 91W/Y	Continental	Sport Contact	
	Dunlop	SP 9090	
	Pirelli	P 6000	
	Michelin	Pilot Sport	
	Bridgestone	Potenza RE 040	
	Goodyear	NCT 5	

33.16 Summer tyres for Bora, Bora 4Motion from model year 1999 through model year 2005

Tyre size	Make	Tread pattern	Remarks
195/65 R 15 91T	Continental	Eco Contact EP	
	Dunlop	SP 9*E	
	Michelin	XT 2	
	Goodyear	GT 2E	
	Firestone	F 580	
	Pirelli	P 3000	
195/65 R 15 91H	Michelin	XH1	
	Dunlop	SP 200 E	
	Goodyear	NCT 5	
195/65 R 15 91V	Continental	Eco Contact CP	
	Goodyear	NCT 5	
	Michelin	Primacy	
	Dunlop	SP Sport 200 E	
	Pirelli	P 6000	
	Kleber	Dynaxer HP	
	Firestone	FH 680 B	
	Dunlop	SP Sport 200 ULW (ultra light weight)	Low-friction tyres
205/55 R 16 91W	Continental	Sport Contact	These tyres are permitted only in conjunction with modified full-size hubcaps, in use from 11.99;
	Dunlop	SP Sport 2000 E	Also see ⇒ Technical Service Handbook
	Bridgestone	ER 30	
	Michelin	MXM	
	Goodyear	NCT 5	

Protected by copyright. Copying for private or commercial purposes, in any form and by any means, is not permitted unless authorised by Volkswagen AG. Volkswagen AG does not guarantee or accept any liability with respect to the correctness of information in this document. Copyright by Volkswagen AG.
satelettronica

Tyre size	Make	Tread pattern	Remarks
	Pirelli	P 6000	
225/45 R 17 91W/Y	Continental	Sport Contact	
	Dunlop	SP 9090	
	Pirelli	P 6000	
	Michelin	Pilot Sport	
	Bridgestone	Potenza RE 040	
	Goodyear	NCT 5	

33.17 Summer tyres for Golf Estate, Golf Estate 4Motion from model year 1999 through model year 2006, Bora Estate, Bora Estate 4Motion from model year 1999 through model year 2005

Tyre size	Make	Tread pattern	Remarks
195/65 R 15 91T	Continental	Eco Contact EP	
	Dunlop	SP 9*E	
	Michelin	XT 2	
	Goodyear	GT 2E	
	Firestone	F 580	
	Pirelli	P 3000	
195/65 R 15 91H	Michelin	XH1	
	Dunlop	SP 200 E	
	Goodyear	NCT 5	
195/65 R 15 91V	Continental	Eco Contact CP	
	Goodyear	NCT 5	
	Michelin	Primacy	
	Dunlop	SP Sport 200 E	
	Pirelli	P 6000	
	Kleber	Dynaxer HP	
	Firestone	FH 680 B	
	Dunlop	SP Sport 200 ULW (ultra light weight)	Low-friction tyres
205/55 R 16 91W	Continental	Sport Contact	These tyres are permitted only in conjunction with modified full-size hubcaps, in use from 11.99;
	Dunlop	SP Sport 2000 E	Also see ⇒ Technical Service Handbook
	Bridgestone	ER 30	
	Michelin	MXM	
	Goodyear	NCT 5	
	Pirelli	P 6000	
225/45 R 17 91W/Y	Continental	Sport Contact	
	Dunlop	SP 9090	
	Pirelli	P 6000	
	Michelin	Pilot Sport	
	Bridgestone	Potenza RE 040	
	Goodyear	NCT 5	

Protected by copyright. Copying for private or commercial purposes, in part or in whole, is not permitted unless authorised by Volkswagen AG. Volkswagen AG does not guarantee or accept any liability with respect to the correctness of information in this document. Copyright by Volkswagen AG.
satelettronica

33.18 Summer tyres for Golf R32

Tyre size	Make	Tread pattern
225/45 R 17 91W/Y	Continental	Sport Contact
	Dunlop	SP 9090
	Pirelli	P 6000
	Michelin	Pilot Sport
	Bridgestone	Potenza RE 040
	Goodyear	NCT 5
225/40 R 18 88Y	Michelin	Pilot Sport
	Dunlop	SP 9000

33.19 Summer tyres for Golf Anniversary GTI

Tyre size	Make	Tread pattern
205/55 R 16 91W	Continental	Sport Contact
	Dunlop	SP Sport 2000 E
	Bridgestone	ER 30
	Michelin	MXM
	Goodyear	NCT 5
	Pirelli	P 6000
225/45 R 17 91W/Y	Continental	Sport Contact
	Dunlop	SP 9090
	Pirelli	P 6000
	Michelin	Pilot Sport
	Bridgestone	Potenza RE 040
	Goodyear	NCT 5
225/40 R 18 88Y	Michelin	Pilot Sport
	Dunlop	SP 9000
225/40 R 18 92Y XL	Goodyear	Eagle F1

33.20 Summer tyres for Golf Cabriolet, from model year 1998 through model year 2002

Tyre size	Make	Tread pattern	Remarks
175/80 R 14 88T	Michelin	XT 1	
	Firestone	F 580-FS	
	Continental	Eco Contact EP	
	Goodyear	GT2E	
	Dunlop	SP 10 3e	
175/80 R 14 88H	Dunlop	SP Sport 200 E	
	Firestone	F 580	
	Continental	Eco Contact CP	
	Michelin	XH1	
	Toyo	TYJ35	

Volkswagen AG does not guarantee or accept any liability with respect to the correctness of information in this document. Copyright by Volkswagen AG.
Protected by copyright. Copying for private or commercial purposes, in part or in whole, is not permitted unless authorised by Volkswagen AG.
satelettronica

Tyre size	Make	Tread pattern	Remarks
	Dunlop	SP Sport 200 ULW (ultra light weight)	Low-friction tyres
195/65 R 15 91T	Continental	Eco Contact EP	
	Dunlop	SP 9*E	
	Michelin	XT 2	
	Goodyear	GT 2E	
	Firestone	F 580	
	Pirelli	P 3000	
195/65 R 15 91H	Michelin	XH1	
	Dunlop	SP 200 E	
	Goodyear	NCT 5	
195/65 R 15 91V	Continental	Eco Contact CP	
	Goodyear	NCT 5	
	Michelin	Primacy	
	Dunlop	SP Sport 200 E	
	Pirelli	P 6000	
	Kleber	Dynaxer HP	
	Firestone	FH 680 B	
	Dunlop	SP Sport 200 ULW (ultra light weight)	Low-friction tyres
205/55 R 16 91W	Continental	Sport Contact	These tyres are permitted only in conjunction with modified full-size hubcaps, in use from 11.99;
	Dunlop	SP Sport 2000 E	Also see ⇒ Technical Service Handbook
	Bridgestone	ER 30	
	Michelin	MXM	
	Goodyear	NCT 5	
	Pirelli	P 6000	
225/45 R 17 91W/Y	Continental	Sport Contact	
	Dunlop	SP 9090	
	Pirelli	P 6000	
	Michelin	Pilot Sport	
	Bridgestone	Potenza RE 040	
	Goodyear	NCT 5	

33.21 Summer tyres for New Beetle from model year 1999

Tyre size	Make	Tread pattern	Remarks
195/65 R 15 91T	Continental	Eco Contact EP	
	Dunlop	SP 9*E	
	Michelin	XT 2	
	Goodyear	GT 2E	
	Firestone	F 580	
	Pirelli	P 3000	
195/65 R 15 91H	Firestone	FH 580	
	Continental	CH 90	

Protected by copyright. Copying for private or commercial purposes, in part, is not permitted unless authorised by Volkswagen AG. Volkswagen AG does not guarantee or accept any liability with respect to the correctness of information in this document. Copyright by Volkswagen AG.

satelettronica

Tyre size	Make	Tread pattern	Remarks
195/65 R 15 91V	Continental	Eco Contact CP	
	Goodyear	NCT 5	
	Michelin	Primacy	
	Dunlop	SP Sport 200 E	
	Pirelli	P 6000	
	Kleber	Dynaxer HP	
	Firestone	FH 6808	
205/55 R 16 91W	Continental	Sport Contact	These tyres are permitted only in conjunction with modified full-size hubcaps, in use from 11.99;
	Dunlop	SP Sport 2000 E	Also see ⇒ Technical Service Handbook
	Bridgestone	ER 30	
	Michelin	MXM	
	Goodyear	NCT 3	
	Goodyear	NCT 5	
	Pirelli	P 6000	
225/45 R 17 91W/Y	Continental	Sport Contact	
	Dunlop	SP 9090	
	Pirelli	P 6000	
	Michelin	Pilot Sport	
	Bridgestone	Potenza RE 040	

33.22 Summer tyres for New Beetle Cabriolet from model year 2003

Tyre size	Make	Tread pattern	Remarks
195/65 R 15 91T	Continental	Eco Contact EP	
	Dunlop	SP 9*E	
	Michelin	XT 2	
	Goodyear	GT 2E	
	Firestone	F 580	
	Pirelli	P 3000	
195/65 R 15 91H	Firestone	FH 580	
	Continental	CH 90	
195/65 R 15 91V	Continental	Eco Contact CP	
	Goodyear	NCT 5	
	Michelin	Primacy	
	Dunlop	SP Sport 200 E	
	Pirelli	P 6000	
	Kleber	Dynaxer HP	
	Firestone	FH 6808	
205/55 R 16 91W	Continental	Sport Contact	These tyres are permitted only in conjunction with modified full-size hubcaps, in use from 11.99;
	Dunlop	SP Sport 2000 E	Also see ⇒ Technical Service Handbook
	Bridgestone	ER 30	

satelettronica

Tyre size	Make	Tread pattern	Remarks
	Michelin	MXM	
	Goodyear	NCT 3	
	Goodyear	NCT 5	
	Pirelli	P 6000	
225/45 R 17 91W/Y	Continental	Sport Contact	
	Dunlop	SP 9090	
	Pirelli	P 6000	
	Michelin	Pilot Sport	
	Bridgestone	Potenza RE 040	

33.23 Summer tyres for New Beetle RSi

Tyre size	Make	Tread pattern
235/40 ZR 18 91W	Michelin	Pilot Sport

33.24 Summer tyres for Golf from model year 2004

Tyre size	Make	Tread pattern	Remarks
195/65 R 15 91T	Goodyear	GT 3	
	Michelin	Energy 3	
	Continental	CEC3	
195/65 R 15 91H	Pirelli	P 6000	
	Goodyear	NCT 5	
	Michelin	EN 3	
	Bridgestone	B 390	
	Continental	CECJ	
195/65 R 15 91V	Pirelli	P 6000	
	Goodyear	NCT 5	
	Michelin	EN 3	
	Bridgestone	B 390	
	Continental	Premium Contact	
205/55 R 16 91V	Pirelli	P 6000	
	Goodyear	NCT 5	
	Michelin	Energy 3	
	Bridgestone	ER 30	
	Continental	SC2	
	Bridgestone	ER 300 RFT	Flat-run tyres for 7 J x 16 EH2 rim
205/55 R 16 91W	Pirelli	P 6000	
	Goodyear	NCT 5	
	Bridgestone	ER 30	
225/45 R 17 91W	Bridgestone	RE 40	
	Bridgestone	RE 50	
	Michelin	Primacy	
	Dunlop	SP Sport 01A	
225/45 R 17 94W	Michelin	Primacy	

Volkswagen AG does not guarantee or accept any liability with respect to the correctness of information in this document. Copyright by Volkswagen AG.
Protected by copyright. Copying, distribution and utilisation is prohibited unless authorised by Volkswagen AG. Commercial purposes, part or in whole, is not permitted unless authorised by Volkswagen AG.
satelettronica

Tyre size	Make	Tread pattern	Remarks
225/40 R 18 92Y	Bridgestone	RE 50A	
	Continental	SC2	

33.25 Summer tyres for Golf GTI from model year 2005

Tyre size	Make	Tread pattern
225/45 R 17 91W	Bridgestone	RE 40
	Bridgestone	RE 50
	Michelin	Primacy
	Continental	SC2
	Bridgestone	RE 50A
	Dunlop	SP Sport 01A
225/40 R 18 92Y	Bridgestone	RE 50A
	Michelin	Exalto 2
	Continental	SC 2

33.26 Summer tyres for Golf Plus from model year 2005

Tyre size	Make	Tread pattern	Remarks
195/65 R 15 91T	Goodyear	GT 3	
	Michelin	Energy 3	
	Continental	CEC3	
195/65 R 15 91H	Pirelli	P 6000	
	Goodyear	NCT 5	
	Michelin	EN 3	
	Bridgestone	B 390	
	Continental	CECJ	
195/65 R 15 91V	Pirelli	P 6000	
	Goodyear	NCT 5	
	Michelin	EN 3	
	Bridgestone	B 390	
	Continental	Premium Contact	
205/55 R 16 91V	Pirelli	P 6000	
	Goodyear	NCT 5	
	Michelin	Energy 3	
	Bridgestone	ER 30	
	Continental	SC2	
	Bridgestone	ER 300 RFT	Flat-run tyres for 7 J x 16 EH2 rim
205/55 R 16 91W	Pirelli	P 6000	
	Goodyear	NCT 5	
	Bridgestone	ER 30	
225/45 R 17 91W	Bridgestone	RE 40	
	Bridgestone	RE 50	
	Michelin	Primacy	
	Dunlop	SP Sport 01A	

Copyright by Volkswagen AG. Volkswagen AG does not guarantee or accept any liability with respect to the correctness of information in this document. Copying for private or commercial purposes, in part or in whole, is not permitted unless authorised by Volkswagen AG.
satelettronica

Tyre size	Make	Tread pattern	Remarks
225/45 R 17 94W	Michelin	Primacy	
225/40 R 18 92Y	Bridgestone	RE 50A	
	Continental	SC2	

33.27 Summer tyres for Jetta from model year 2006

Tyre size	Make	Tread pattern	Remarks
195/65 R 15 91T	Goodyear	GT 3	
	Michelin	Energy 3	
	Continental	CEC3	
195/65 R 15 91H	Pirelli	P 6000	
	Goodyear	NCT 5	
	Michelin	EN 3	
	Bridgestone	B 390	
	Continental	CECJ	
195/65 R 15 91V	Pirelli	P 6000	
	Goodyear	NCT 5	
	Michelin	EN 3	
	Bridgestone	B 390	
	Continental	Premium Contact	
205/55 R 16 91V	Pirelli	P 6000	
	Goodyear	NCT 5	
	Michelin	Energy 3	
	Bridgestone	ER 30	
	Continental	SC2	
	Bridgestone	ER 300 RFT	Flat-run tyres for 7 J x 16 EH2 rim
205/55 R 16 91W	Pirelli	P 6000	
	Goodyear	NCT 5	
	Bridgestone	ER 30	
225/45 R 17 91W	Bridgestone	RE 40	
	Bridgestone	RE 50	
	Michelin	Primacy	
	Dunlop	SP Sport 01A	
225/45 R 17 94W	Michelin	Primacy	

33.28 Summer tyres for Touran from model year 2003

Tyre size	Make	Tread pattern
195/65 R 15 91H	Pirelli	P 6000
	Goodyear	NCT 5
	Michelin	Energy 3
	Bridgestone	B 390
	Continental	CE CJ
195/65 R 15 95H Extra Load	Michelin	Energy 3
	Bridgestone	B 390

Protected by copyright. Copying for private or commercial purposes, in part or in whole, is not permitted unless authorised by Volkswagen AG. Volkswagen AG does not provide or accept any liability with respect to the correctness of information in this document. Copyright by Volkswagen AG.
satelettronica

Protected by copyright. Copying for private or commercial purposes, in part or in whole, is not permitted unless authorised by Volkswagen AG. Volkswagen AG does not guarantee or accept any liability with respect to the correctness of information in this document.

Tyre size	Make	Tread pattern
195/65 R 15 91V	Pirelli	P 6000
	Goodyear	NCT 5
	Michelin	Energy 3
	Bridgestone	B 390
	Continental	Premium Contact
205/55 R 16 91V	Pirelli	P 6000
	Goodyear	NCT 5
	Michelin	Energy 3
	Continental	Sport Contact 2
	Dunlop	Sport 01A
	Bridgestone	ER 30
205/55 R 16 94V Extra Load	Bridgestone	ER 30
	Michelin	Energy 3
	Goodyear	NCT 5
225/45 R 17 91W	Michelin	Primacy
	Dunlop	Sport 01A
	Continental	Sport Contact 2
225/45 R 17 94W Extra Load	Michelin	Primacy

33.29 Summer tyres for Passat from model year 1994 through model year 1997

Tyre size	Make	Tread pattern
185/65 R 14 86T	Dunlop	SP 9
	Continental	CT 22
	Uniroyal	R380/65
	Firestone	F 560
195/60 R 14 86H	Michelin	HX MXV 3A
	Dunlop	SP Sport D8M2
	Continental	CH 90
	Firestone	FH 690
205/50 R 15 86V	Firestone	FH 690
	Dunlop	SP Sport 2000
	Michelin	HX MXV 3A
	Continental	CV 90
	Fulda	Y 2000 +
205/50 R 15 86W	Michelin	HX MXV 3A
	Dunlop	SP Sport 2000

33.30 Summer tyres for Passat from model year 1997 through model year 2006

Tyre size	Make	Tread pattern	Remarks
195/65 R 15 91T	Dunlop	SP9 E	
	Michelin	XT 2	
	Continental	Eco Contact EP	
	Goodyear	GT 2E	

satelettronica

Tyre size	Make	Tread pattern	Remarks
	Firestone	F 580	
	Pirelli	P 3000	
195/65 R 15 91H	Michelin	XH1	
	Dunlop	SP 200 E	
	Goodyear	NCT 5	
195/65 R 15 91V	Continental	Eco Contact CP	
	Goodyear	Eagle NCT 5	
	Michelin	Primacy	
	Dunlop	SP Sport 200 E	
	Pirelli	P 6000	
	Firestone	FH 680 B	
	Dunlop	SP Sport 200 ULW (ultra light weight)	Low-friction tyres
205/60 R 16 91V	Dunlop	SP Sport 2000 E	
	Michelin	Primacy	
	Michelin	MXV 3A	
	Continental	Eco Contact CP	
205/55 R 16 91W	Continental	Sport Contact	
	Bridgestone	ER 30	
	Dunlop	SP Sport 2000 E	
	Michelin	MXM	
	Goodyear	NCT 3	
	Goodyear	NCT 5	
	Pirelli	P 6000	
225/45 R 17 91Y	Michelin	Primacy	
	Bridgestone	Potenza	
	Continental	Sport C2	

Protected by copyright. Copying for private or commercial purposes, in part or in whole, is not permitted unless authorised by Volkswagen AG. Volkswagen AG does not guarantee or accept any liability with respect to the correctness of information in this document. Copyright by Volkswagen AG.

33.31 Summer tyres for Passat W8

Tyre size	Make	Tread pattern	Remarks
215/55 R 16 93Y	Michelin	Primacy	Only for USA
	Dunlop	SP 9000	
225/45 R 17 91Y	Bridgestone	Potenza	
	Michelin	Primacy	
	Continental	Sport C2	

33.32 Summer tyres for Passat Protect

Tyre size	Make	Tread pattern
205/55 R 16 93W XL	Dunlop	SP Sport 2000 E
205/55 R 16 97W/Y XL	Dunlop	SP Sport 9000
215/55 R 16 93Y XL XL means „Extra Load“ Notes	Dunlop	SP Sport 9000

satelettronica

33.33 Summer tyres for Passat from model year 2006

Tyre size	Make	Tread pattern	Remarks
205/55 R 16 91H	Michelin	Primacy	
	Goodyear	Excellence	
	Bridgestone	ER 300	
	Dunlop	SP Sport 01A	
205/55 R 16 94V	Michelin	Primacy	
	Goodyear	Excellence	
	Bridgestone	ER 300	
215/55 R 16 97V	Bridgestone	ER 300 RFT	Flat-run tyres for 7 J x 16 EH2 rim
215/55 R 16 97W	Michelin	Primacy	
	Dunlop	SP Sport 01A	
	Bridgestone	ER 300	
235/45 R 17 97W	Pirelli	P Zero Rosso	
	Continental	SC2	
	Bridgestone	ER 030A	
235/40 R 18 95Y	Pirelli	P Zero Rosso	

33.34 Summer tyres for Phaeton from model year 2003

Tyre size	Make	Tread pattern
235/60 R 16 100Y	Bridgestone	ERO 30
	Dunlop	SP 9000
235/55 R 17 99Y	Bridgestone	ERO 30
	Goodyear	NCT 5
	Dunlop	SP 9000
	Michelin	Primacy
235/50 R 18 101Y XL	Bridgestone	ERO 40
	Dunlop	SP 9000
255/45 R 18 103Y XL	Bridgestone	ERO 40
	Dunlop	SP 9000
255/40 R 19 100Y XL	Pirelli	P Zero r

33.35 Summer tyres for Sharan from model year 1996

Tyre size	Make	Tread pattern
195/65 R 15 95T	Continental	CT 22
reinforced	Firestone	F 570
205/60 R 15 95H	Continental	CH 90
Only 16" tyres are permitted for vehicles from model year 2002		
195/60 R 16 C 99/97H	Dunlop	SP Sport 200
	Bridgestone	ER 30C
	Michelin	Agilisis 51
205/55 R 16 C 98/96H	Bridgestone	ER 30C

Copyright by Volkswagen AG. Volkswagen AG does not guarantee or accept any liability with respect to the correctness of information in this document. Copying for private or commercial purposes, in part or in whole, is not permitted unless authorised by Volkswagen AG. Protected by copyright.

satelettronica

Tyre size	Make	Tread pattern
215/55 R 16 95H reinforced	Dunlop	SP Sport 2020 E
	Michelin	HXMXM
	Continental	CEC CP
215/55 R 16 95W reinforced	Dunlop	SP Sport 2020 E
	Michelin	HXMXM
	Continental	CEC CP
215/55 R 16 97H reinforced	Michelin	HXMXM
215/55 R 16 97W reinforced	Michelin	HXMXM
225/45 R 17 94W reinforced	Michelin	Pilot Primacy

33.36 Summer tyres for Touareg from model year 2003

Tyre size	Make	Tread pattern
235/65 R 17 108V	Bridgestone	Turanza ER 30
	Dunlop	PT 4000
	Michelin	Diamaris
255/60 R 17 106V	Dunlop	PT 8000
	Michelin	Diamaris 4x4
255/55 R 18 109Y	Bridgestone	Turanza ER 30
	Pirelli	P Zero Rosso
	Continental	4x4 Sport Contact
275/45 R 19 108Y	Pirelli	P Zero Rosso
	Continental	4x4 Sport Contact
275/40 R 20 106Y	Pirelli	P Zero Rosso
	Michelin	Diamaris
	Continental	4x4 Sport Contact

Protected by copyright. Copyright by Volkswagen AG. Copying for private or commercial purposes, in part or in whole, is not permitted unless authorised by Volkswagen AG. Volkswagen AG does not guarantee or accept any liability with respect to the correctness of information in this document.
satelettronica

34 Approved makes of all-season tyres for initial fitting

34.1 All-season tyres for Lupo from model year 1999 through model year 2005

Tyre size	Make	Tread pattern
155/70 R 13 75T	Dunlop	SP All Season M2
175/65 R 13 80T	Dunlop	SP All Season M2

34.2 All-season tyres for Polo from model year 1995 through model year 2002

Tyre size	Make	Tread pattern
155/70 R 13 75T	Dunlop	SP All Season M2 (for Europe)
175/65 R 13 80T	Dunlop	SP All Season M2 (for Europe)
	Continental	TS 755

34.3 All-season tyres from model year 2002

Tyre size	Make	Tread pattern
165/70 R 14 81T	Goodyear	Vector 3
185/60 R 14 82H	Dunlop	SP All Season M2
	Goodyear	Eagle Vector

34.4 All-season tyres for Polo Saloon from model year 2004

Tyre size	Make	Tread pattern
165/70 R 14 81T	Goodyear	Vector 3
185/60 R 14 82H	Dunlop	SP All Season M2
	Goodyear	Eagle Vector

34.5 All-season tyres for Golf, Vento from model year 1992 through model year 1998

Tyre size	Make	Tread pattern	Remarks
175/70 R 13 82T	Dunlop	SP All Season M2	
185/60 R 14 82H	Dunlop	SP All Season M2	For Europe
195/60 R 14 86H	Dunlop	All Season M2	
	Goodyear	Eagle GA	For USA
	Goodrich	Comp T/A	
205/50 R 15 86H	Goodyear	Eagle GA	For USA

Protected by copyright. Copying for private or commercial purposes, in part or in whole, is not permitted unless authorised by Volkswagen AG. Volkswagen AG does not guarantee or accept any liability with respect to the correctness of information in this document. Copyright by Volkswagen AG.
satelettronica

34.6 All-season tyres for Golf Estate from model year 1994 through model year 1998

Tyre size	Make	Tread pattern	Remarks
175/70 R 13 82T	Dunlop	SP All Season M2	
185/60 R 14 82H	Dunlop	SP All Season M2	For Europe
195/60 R 14 86H	Dunlop	All Season M2	
	Goodyear	Eagle GA	For USA
	Goodrich	Comp T/A	
205/50 R 15 86H	Goodyear	Eagle GA	For USA

34.7 All-season tyres for Golf Cabriolet, from model year 1994 through model year 1997

Tyre size	Make	Tread pattern	Remarks
185/60 R 14 82H	Dunlop	SP All Season M2	For Europe

34.8 All-season tyres for Golf, Golf 4Motion from model year 1998 through model year 2004

Tyre size	Make	Tread pattern	Remarks
175/80 R 14 88H	Dunlop	SP All Season M2	
195/65 R 15 91H	Dunlop	SP All Season M2	For Europe
	Continental	CH 95	For USA
	Michelin	MXV4 Plus	
	Goodyear	Eagle LS	
205/55 R 16 91H	Continental	CH 95	
	Goodyear	Eagle RSA	
	Michelin	MXV4 Plus	For Japan
225/45 R 17 91H	Michelin	MXM	For USA
	Goodyear	Eagle RSA	
225/45 R 17 94H XL	Michelin	MXM	For USA

34.9 All-season tyres for Bora, Bora 4Motion from model year 1999 through model year 2005

Tyre size	Make	Tread pattern	Remarks
195/65 R 15 91H	Dunlop	SP All Season M2	For Europe
	Continental	CH 95	For USA
	Michelin	MXV4 Plus	
	Goodyear	Eagle LS	
205/55 R 16 91H	Continental	CH 95	
	Goodyear	Eagle RSA	
	Michelin	MXV4 Plus	For Japan
225/45 R 17 91H	Michelin	MXM	For USA
	Goodyear	Eagle RSA	

Protected by copyright. Copyright by Volkswagen AG. Volkswagen AG does not accept any liability with respect to the correctness of information in this document. Copying for private or commercial purposes, in part or in whole is not permitted unless authorised by Volkswagen AG.
satelettronica

Tyre size	Make	Tread pattern	Remarks
225/45 R 17 94H XL	Michelin	MXM	For USA

34.10 All-season tyres for Golf Estate, Golf Estate 4Motion from model year 1999 through model year 2006, Bora Estate, Bora Estate 4Motion from model year 1999 through model year 2005

Tyre size	Make	Tread pattern	Remarks
195/65 R 15 91H	Dunlop	SP All Season M2	For Europe
	Continental	CH 95	For USA
	Michelin	MXV4 Plus	
	Goodyear	Eagle LS	
205/55 R 16 91H	Continental	CH 95	
	Goodyear	Eagle RSA	
	Michelin	MXV4 Plus	For Japan
225/45 R 17 91H	Michelin	MXM	For USA
	Goodyear	Eagle RSA	
225/45 R 17 94H XL	Michelin	MXM	For USA

34.11 All-season tyres for Golf Cabriolet, from model year 1998 through model year 2002

Tyre size	Make	Tread pattern	Remarks
175/80 R 14 88H	Dunlop	SP All Season M2	
195/65 R 15 91H	Dunlop	SP All Season M2	
205/55 R 16 91H	Continental	CH 95	
	Goodyear	Eagle RSA	
	Michelin	MXV4 Plus	For Japan
225/45 R 17 91H	Michelin	MXM	For USA

34.12 All-season tyres for New Beetle from model year 1999

Tyre size	Make	Tread pattern	Remarks
195/65 R 15 91H	Dunlop	SP All Season M2	For Europe
	Continental	CH 95	For USA
	Michelin	MXV4 Plus	
	Goodyear	Eagle LS	
205/55 R 16 91H	Continental	CH 95	For USA
	Goodyear	Eagle RSA	
	Michelin	MXV4 Plus	
225/45 R 17 91H	Michelin	MXM 4	For USA
	Goodyear	Eagle RSA	
225/45 R 17 90H	Michelin	MXM	For Japan

Protected by copyright. Copyright by Volkswagen AG. Volkswagen AG does not guarantee or accept any liability with respect to the correctness of information in this document. Copyright by Volkswagen AG. Copying for private or commercial purposes, in part or in whole, is not permitted unless authorised by Volkswagen AG.
satelettronica

34.13 All-season tyres for New Beetle Cabriolet from model year 2003

Tyre size	Make	Tread pattern	Remarks
195/65 R 15 91H	Dunlop	SP All Season M2	For Europe
	Continental	CH 95	For USA
	Michelin	MXV4 Plus	
	Goodyear	Eagle LS	
205/55 R 16 91H	Continental	CH 95	For USA
	Goodyear	Eagle RSA	
	Michelin	MXV4 Plus	
225/45 R 17 91H	Michelin	MXM 4	For USA
	Goodyear	Eagle RSA	

34.14 All-season tyres for Golf from model year 2004

Tyre size	Make	Tread pattern	Remarks
195/65 R 15 91H	Dunlop	AS M2	
	Goodyear	Vector EV2	
	Michelin	MXV 4 S8	For USA
	Goodyear	Eagle LS	
	Continental	Pro Contact	
205/55 R 16 91H	Michelin	MXV 4 S8	For USA
	Goodyear	Eagle LS	
	Continental	Pro Contact	
	Bridgestone	EL 400	
205/55 R 16 94V	Goodyear	Vector 2	
225/45 R 17 91H	Michelin	MXM 4	For USA
	Continental	Pro Contact	
	Goodyear	Eagle RSA	

34.15 All-season tyres for Golf Plus from model year 2005

Tyre size	Make	Tread pattern	Remarks
195/65 R 15 91H	Dunlop	AS M2	
	Goodyear	Vector EV2	
	Michelin	MXV 4 S8	For USA
	Goodyear	Eagle LS	
205/55 R 16 91H	Michelin	MXV 4 S8	For USA
	Goodyear	Eagle LS	
	Bridgestone	EL 400	
205/55 R 16 94V	Goodyear	Vector 2	
225/45 R 17 91H	Michelin	MXM 4	For USA
	Continental	Pro Contact	
	Goodyear	Eagle RSA	

Protected by copyright. Copyright by Volkswagen AG.
Copyright by Volkswagen AG does not guarantee or accept any liability with respect to the correctness of information in this document.
Reproduction and distribution are only authorised by Volkswagen AG for non-commercial purposes, in part or in whole, if the copyright notice is included.
satelettronica

34.16 All-season tyres for Jetta from model year 2006

Tyre size	Make	Tread pattern	Remarks
195/65 R 15 91H	Dunlop	AS M2	
	Goodyear	Vector EV2	
	Michelin	MXV 4 S8	For USA
	Goodyear	Eagle LS	
205/55 R 16 91H	Michelin	MXV 4 S8	For USA
	Goodyear	Eagle LS	
	Bridgestone	EL 400	
205/55 R 16 94V	Goodyear	Vector 2	
225/45 R 17 91H	Michelin	MXM 4	For USA
	Continental	Pro Contact	
	Goodyear	Eagle RSA	

34.17 All-season tyres for Touran from model year 2003

Tyre size	Make	Tread pattern
195/65 R 15 91H	Dunlop	AS M2
205/55 R 16 94V Extra Load	Goodyear	Vector 2

34.18 All-season tyres for Passat from model year 1997 through model year 2006

Tyre size	Make	Tread pattern	Remarks
195/65 R 15 91H	Dunlop	SP All Season M2	For Europe
	Continental	CH 95	For USA
	Michelin	MXV4 Plus	
	Goodyear	Eagle LS	
205/55 R 16 91H	Continental	CH 95	
	Goodyear	Eagle RSA	
	Michelin	MXV4 Plus	For Japan
225/45 R 17 94H XL	Michelin	MXM	For USA

34.19 All-season tyres for Passat W8

Tyre size	Make	Tread pattern	Remarks
215/55 R 16 93H	Continental	CH 95	For USA
215/55 R 16 97H XL	Continental	CH 95	For USA
XL means „Extra Load“ Notes	Michelin	MXM 4	

34.20 All-season tyres for Passat from model year 2006

Tyre size	Make	Tread pattern	Remarks
205/55 R 16 94V	Goodyear	Vector 2	
205/55 R 16 97H	Goodyear	Eagle LS	For USA

Protected by copyright. Copying for private or commercial purposes, in part or in whole, is not permitted unless authorised by Volkswagen AG. Volkswagen AG does not guarantee or assume any liability with respect to the correctness of information in this document. Copyright by Volkswagen AG.

satelettronica

Tyre size	Make	Tread pattern	Remarks
	Michelin	MXM 4	
235/45 R 17 97H	Michelin	MXM 4	For USA

34.21 All-season tyres for Phaeton from model year 2003

Tyre size	Make	Tread pattern	Remarks
235/60 R 16 100H	Continental	CH 95	For USA
235/55 R 17 103H XL	Michelin	MXM 4	
255/45 R 18 103H XL XL means „Extra Load“ Notes	Michelin	MXM 4	

34.22 All-season tyres for Touareg from model year 2003

Tyre size	Make	Tread pattern
235/70 R 16 105H	Goodyear	Wrang W HP
235/65 R 17 108H	Continental	4x4 Contact
255/60 R 17 106H	Dunlop	ST 8000 A/T
	Pirelli	Scorpion Zero
255/55 R 18 109V	Continental	4x4 Contact
	Pirelli	Scorpion Zero

Protected by copyright. Copying for private or commercial purposes, in part or in whole, is not permitted unless authorised by Volkswagen AG. Volkswagen AG does not guarantee or accept any liability with respect to the correctness of information in this document. Copyright by Volkswagen AG.

satelettronica

Protected by copyright. Copying for private or commercial purposes, in part or in whole, is not permitted unless authorised by Volkswagen AG. Volkswagen AG does not guarantee or accept any liability with respect to the correctness of information in this document. Copyright by Volkswagen AG.

35 Approved makes of winter tyres for initial fitting

35.1 Winter tyres for Lupo 3L from model year 1999

Tyre size	Make	Tread pattern
155/65 R 14 75T	Continental	TS 760 Winter Contact
	Dunlop	SP Winter Sport M2
	Michelin	Alpin

35.2 Winter tyres for Lupo FSI from model year 1999

Tyre size	Make	Tread pattern
155/65 R 14 75T	Continental	TS 760 Winter Contact
	Dunlop	SP Winter Sport M2
	Michelin	Alpin

35.3 Winter tyres for Lupo GTI from model year 1999

Tyre size	Make	Tread pattern
185/55 R 14 78T	Continental	TS 760
	Dunlop	SP Winter Sport M2
	Michelin	Alpin

35.4 Winter tyres for Lupo from model year 1999 through model year 2005

Tyre size	Make	Tread pattern
155/70 R 13 75Q	Goodyear	Ultra Grip 5
	Michelin	Alpin
155/70 R 13 75S	Vredestein	Snowtrac
155/70 R 13 75T	Continental	TS 780
	Kleber	Krisalp 3
175/65 R 13 80Q	Goodyear	Ultra Grip 5
175/65 R 13 80T	Dunlop	SP Winter Sport M2
	Vredestein	Snowtrac
185/55 R 14 78T	Continental	TS 760
	Dunlop	Winter Sport M2
	Michelin	Alpin

35.5 Winter tyres for Fox from model year 2006

Tyre size	Make	Tread pattern
165/70 R 14 81T	Continental	TS 780 Winter Contact
	Dunlop	SP Winter Sport M2
	Michelin	XM + S Alpin

satelettronica

Tyre size	Make	Tread pattern
	Goodyear	Ultra Grip 5
185/60 R 14 82Q/T	Goodyear	Ultra Grip 6
	Continental	TS 780 Winter Contact
	Vredestein	Snowtrac 2
	Michelin	XM + S Alpin

35.6 Winter tyres for Polo model year 1995 through model year 2002

Tyre size	Make	Tread pattern
155/70 R 13 75Q	Goodyear	Ultra Grip 5
	Michelin	Alpin
155/70 R 13 75S	Vredestein	Snowtrac
155/70 R 13 75T	Continental	TS 780
	Kleber	Krisalp 3
175/65 R 13 80Q	Goodyear	Ultra Grip 5
175/65 R 13 80T	Dunlop	SP Winter Sport M2
	Vredestein	Snowtrac
185/55 R 14 78T	Continental	TS 760
	Dunlop	Winter Sport M2
	Michelin	Alpin

35.7 Winter tyres for Polo from model year 2002

Tyre size	Make	Tread pattern
155/80 R 13 79Q	Continental	TS 760 Winter Contact
	Goodyear	Ultra Grip 5
	Michelin	XM + S Alpin
165/70 R 14 81T	Continental	TS 780 Winter Contact
	Dunlop	SP Winter Sport M2
	Michelin	XM + S Alpin
	Goodyear	Ultra Grip 5
185/60 R 14 82Q/T	Goodyear	Ultra Grip 6
	Continental	TS 780 Winter Contact
	Vredestein	Snowtrac 2
	Michelin	XM + S Alpin
185/55 R 15 82T	Dunlop	SP Winter Sport M2
	Michelin	XM + S Alpin
185/55 R 15 85/86T	Nokian	NRW
	Pirelli	Winter 190

35.8 Winter tyres for Polo Saloon from model year 2004

Tyre size	Make	Tread pattern
155/80 R 13 79Q	Continental	TS 760 Winter Contact
	Goodyear	Ultra Grip 5

Protected by copyright. Copying for private or commercial purposes, in part or in whole, is not permitted unless authorised by Volkswagen AG. Volkswagen AG does not guarantee or accept any liability with respect to the correctness of information in this document. Copyright by Volkswagen AG.

sateletronica

Tyre size	Make	Tread pattern
	Michelin	XM + S Alpin
165/70 R 14 81T	Continental	TS 780 Winter Contact
	Dunlop	SP Winter Sport M2
	Michelin	XM + S Alpin
	Goodyear	Ultra Grip 5
185/60 R 14 82Q/T	Goodyear	Ultra Grip 6
185/55 R 15 82T	Dunlop	SP Winter Sport M2
	Michelin	XM + S Alpin
185/55 R 15 85/86T	Nokian	NRW
	Pirelli	Winter 190

35.9 Winter tyres for Polo Fun from model year 2004

Tyre size	Make	Tread pattern
185/60 R 15 84T	Continental	Winter Contact
185/60 R 15 88T/H	Continental	TS 790
	Vredestein	Snowtrac

35.10 Winter tyres for Polo Classic model year 1996 through model year 2002

Tyre size	Make	Tread pattern
175/65 R 14 82Q/T	Dunlop	SP Winter Sport M2
	Goodyear	Ultra Grip 5
185/60 R 14 82Q	Michelin	XM + S Alpin
185/60 R 14 82T	Continental	TS 780 Winter Contact
	Goodyear	Ultra Grip 5
	Michelin	Alpin
	Vredestein	Snowtrac
185/60 R 14 82H	Continental	TS 770 Winter Contact

35.11 Winter tyres for Polo Estate model year 1998 through model year 2002

Tyre size	Make	Tread pattern
175/65 R 14 82Q/T	Dunlop	SP Winter Sport M2
	Goodyear	Ultra Grip 5
185/60 R 14 82Q	Michelin	XM + S Alpin
185/60 R 14 82T	Continental	TS 780 Winter Contact
	Goodyear	Ultra Grip 5
	Michelin	Alpin
	Vredestein	Snowtrac
185/60 R 14 82H	Continental	TS 770 Winter Contact

Protected by copyright. Copying for private or commercial purposes, in part or in whole, is not permitted unless authorised by Volkswagen AG. Volkswagen AG does not guarantee or accept any liability with respect to the correctness of information. Copyright by Volkswagen AG.
satelettronica

35.12 Winter tyres for Golf, Vento from model year 1992 through model year 1998

Tyre size	Make	Tread pattern
175/70 R13 82T	Uniroyal	MS + 4
	Goodyear	Ultra Grip 5
	Michelin	XM + S 130
185/60 R 14 82Q	Michelin	XM + S Alpin
185/60 R 14 82T	Continental	TS 780 Winter Contact
	Goodyear	Ultra Grip 5
	Michelin	Alpin
	Vredestein	Snowtrac
185/60 R 14 82H	Continental	TS 770 Winter Contact
185/55 R 15 85T	Continental	TS 770 Winter Contact
	Michelin	XM + S 130
185/55 R 15 82H	Continental	TS 770 Winter Contact
185/60 R 14 86T	Continental	TS 770 Winter Contact
	Michelin	XM + S 130

35.13 Winter tyres for Golf Estate from model year 1994 through model year 1998

Tyre size	Make	Tread pattern
175/70 R13 82T	Uniroyal	MS + 4
	Goodyear	Ultra Grip 5
	Michelin	XM + S 130
185/60 R 14 82Q	Michelin	XM + S Alpin
185/60 R 14 82T	Continental	TS 780 Winter Contact
	Goodyear	Ultra Grip 5
	Michelin	Alpin
	Vredestein	Snowtrac
185/60 R 14 82H	Continental	TS 770 Winter Contact
185/55 R 15 85T	Continental	TS 770 Winter Contact
	Michelin	XM + S 130
185/55 R 15 82H	Continental	TS 770 Winter Contact
185/60 R 14 86T	Continental	TS 770 Winter Contact
	Michelin	XM + S 130

35.14 Winter tyres for Golf Cabriolet, from model year 1994 through model year 1997

Tyre size	Make	Tread pattern
175/70 R13 82T	Uniroyal	MS + 4
	Goodyear	Ultra Grip 5
	Michelin	XM + S 130
185/60 R 14 82Q	Michelin	XM + S Alpin
185/60 R 14 82T	Continental	TS 780 Winter Contact
	Goodyear	Ultra Grip 5
	Michelin	Alpin

Protected by copyright. Copying for private or commercial purposes, in part or in whole, is not permitted unless authorised by Volkswagen AG. Volkswagen AG does not guarantee or accept any liability with respect to the correctness of information in this document. Copyright by Volkswagen AG.

satelettronica

Tyre size	Make	Tread pattern
	Vredestein	Snowtrac
185/60 R 14 82H	Continental	TS 770 Winter Contact
185/60 R 14 86T	Continental	TS 770 Winter Contact
	Michelin	XM + S 130

35.15 Winter tyres for Golf, Golf 4Motion from model year 1998 through model year 2004

Tyre size	Make	Tread pattern
175/80 R 14 88Q	Continental	TS 780 Winter Contact
	Goodyear	Ultra Grip 5
	Michelin	Alpin
175/80 R 14 88T	Dunlop	SP Winter Sport M2
	Vredestein	Snowtrac
195/65 R 15 91T	Continental	TS 790 Winter Contact
	Dunlop	SP Winter Sport M3
	Goodyear	Ultra Grip 6
	Michelin	Alpin
	Pirelli	Winter 190
195/65 R 15 91H	Continental	TS 790 Winter Contact
	Michelin	Pilot Alpin
	Nokian	NRW
	Vredestein	Wintrac
	Goodyear	Eagle UG GW3
205/55 R 16 91H	Continental	TS 790 Winter Contact
	Dunlop	SP Winter Sport M3
	Michelin	Pilot Alpin
	Pirelli	Winter 210
	Vredestein	Wintrac

35.16 Winter tyres for Bora, Bora 4Motion from model year 1999 through model year 2005

Tyre size	Make	Tread pattern
195/65 R 15 91T	Continental	TS 790 Winter Contact
	Dunlop	SP Winter Sport M3
	Goodyear	Ultra Grip 6
	Michelin	Alpin
	Pirelli	Winter 190
195/65 R 15 91H	Continental	TS 790 Winter Contact
	Michelin	Pilot Alpin
	Nokian	NRW
	Vredestein	Wintrac
	Goodyear	Eagle UG GW3
205/55 R 16 91H	Continental	TS 790 Winter Contact

AG Volkswagen does not guarantee or accept any liability with respect to the correctness of information in this document. Copyright by Volkswagen AG
Protected by copyright. Copying for private or commercial purposes, in part or in whole, is not permitted unless authorised by Volkswagen AG
satelettronica

Tyre size	Make	Tread pattern
	Dunlop	SP Winter Sport M3
	Michelin	Pilot Alpin
	Pirelli	Winter 210
	Vredestein	Wintrac

35.17 Winter tyres for Golf Estate, Golf Estate 4Motion from model year 1999 through model year 2006, Bora Estate, Bora Estate 4Motion from model year 1999 through model year 2005

Tyre size	Make	Tread pattern
195/65 R 15 91T	Continental	TS 790 Winter Contact
	Dunlop	SP Winter Sport M3
	Goodyear	Ultra Grip 6
	Michelin	Alpin
	Pirelli	Winter 190
195/65 R 15 91H	Continental	TS 790 Winter Contact
	Michelin	Pilot Alpin
	Nokian	NRW
	Vredestein	Wintrac
	Goodyear	Eagle UG GW3
205/55 R 16 91H	Continental	TS 790 Winter Contact
	Dunlop	SP Winter Sport M3
	Michelin	Pilot Alpin
	Pirelli	Winter 210
	Vredestein	Wintrac

35.18 Winter tyres for Golf 32

Tyre size	Make	Tread pattern
205/50 17 93T/H	Dunlop	SP Winter Sport M2

35.19 Winter tyres for Golf Anniversary GTI

Tyre size	Make	Tread pattern
205/55 R 16 91H	Continental	TS 790 Winter Contact
	Dunlop	SP Winter Sport M3
	Michelin	Pilot Alpin
	Pirelli	Winter 210
	Vredestein	Wintrac

35.20 Winter tyres for Golf Cabriolet, from model year 1998 through model year 2002

Tyre size	Make	Tread pattern
175/70 R13 82T	Uniroyal	MS + 4

Protected by copyright. Copying for private or commercial purposes, in part or in whole, is not permitted unless authorised by Volkswagen AG. Volkswagen AG does not guarantee or accept any liability with respect to the correctness of information in this document. Copyright by Volkswagen AG.
satelettronica

Tyre size	Make	Tread pattern
	Goodyear	Ultra Grip 5
	Michelin	XM + S 130
185/60 R 14 82Q	Michelin	XM + S 130
185/60 R 14 82T	Continental	TS 780 Winter Contact
	Goodyear	Ultra Grip 5
	Michelin	Alpin
	Vredestein	Snowtrac
185/60 R 14 82H	Continental	TS 770 Winter Contact
185/55 R 15 85T	Continental	TS 770 Winter Contact
	Michelin	XM + S 130
185/55 R 15 82H	Continental	TS 770 Winter Contact
185/60 R 14 86T	Continental	TS 770 Winter Contact
	Michelin	XM + S 130

35.21 Winter tyres for New Beetle from model year 1999

Tyre size	Make	Tread pattern
195/65 R 15 91T	Continental	TS 790 Winter Contact
	Dunlop	SP Winter Sport M3
	Goodyear	Ultra Grip 6
	Michelin	Alpin
	Pirelli	Winter 190
195/65 R 15 91H	Continental	TS 790 Winter Contact
	Michelin	Pilot Alpin
	Nokian	NRW
	Vredestein	Wintrac
	Goodyear	Eagle UG GW3
205/55 R 16 91H	Continental	TS 790 Winter Contact
	Dunlop	SP Winter Sport M3
	Michelin	Pilot Alpin
	Pirelli	Winter 210
	Vredestein	Wintrac

35.22 Winter tyres for New Beetle Cabriolet from model year 2003

Tyre size	Make	Tread pattern
195/65 R 15 91T	Continental	TS 790 Winter Contact
	Dunlop	SP Winter Sport M3
	Goodyear	Ultra Grip 6
	Michelin	Alpin
	Pirelli	Winter 190
195/65 R 15 91H	Continental	TS 790 Winter Contact
	Michelin	Pilot Alpin
	Nokian	NRW
	Vredestein	Wintrac

satelettronica
Protected by copyright. Copying for private or commercial purposes, in part or in whole, is not permitted unless authorised by Volkswagen AG. Volkswagen AG does not guarantee or accept any liability with respect to the correctness of information in this document. Copyright by Volkswagen AG.

Tyre size	Make	Tread pattern
	Goodyear	Eagle UG GW3
205/55 R 16 91H	Continental	TS 790 Winter Contact
	Dunlop	SP Winter Sport M3
	Michelin	Pilot Alpin
	Pirelli	Winter 210
	Vredestein	Wintrac

35.23 Winter tyres for New Beetle RSi

Tyre size	Make	Tread pattern
205/55 R 16 91H	Dunlop	SP Winter Sport M3
	Michelin	Pilot Alpin
	Pirelli	Winter 210

35.24 Winter tyres for Golf from model year 2004

Tyre size	Make	Tread pattern
195/65 R 15 91H	Goodyear	Eagle UG GW3
205/55 R 16 91H	Dunlop	SP Winter Sport M3
	Michelin	Pilot Alpin
	Pirelli	Winter 210
	Goodyear	Eagle UG GW3

35.25 Winter tyres for Golf GTI from model year 2005

Tyre size	Make	Tread pattern
205/55 R 16 91H	Dunlop	SP Winter Sport M3
	Michelin	Pilot Alpin
	Pirelli	Winter 210
	Goodyear	Eagle UG GW3

35.26 Winter tyres for Golf Plus from model year 2005

Tyre size	Make	Tread pattern
195/65 R 15 91H	Goodyear	Eagle UG GW3
205/55 R 16 91H	Dunlop	SP Winter Sport M3
	Michelin	Pilot Alpin
	Pirelli	Winter 210
	Goodyear	Eagle UG GW3

35.27 Winter tyres for Jetta from model year 2006

Tyre size	Make	Tread pattern
195/65 R 15 91H	Goodyear	Eagle UG GW3

Protected by copyright. Copying for private or commercial purposes, in part or in whole, is not permitted unless authorised by Volkswagen AG. Volkswagen AG does not guarantee or accept any liability with respect to the correctness of information in this document. Copyright by Volkswagen AG.
satelettronica

Tyre size	Make	Tread pattern
205/55 R 16 91H	Dunlop	SP Winter Sport M3
	Michelin	Pilot Alpin
	Pirelli	Winter 210
	Goodyear	Eagle UG GW3

35.28 Winter tyres for Touran from model year 2003

Tyre size	Make	Tread pattern
195/65 R 15 91H	Goodyear	Eagle UG GW3
195/65 R 15 95T	Goodyear	UG 6
	Continental	TS 790
205/55 R 16 91H	Dunlop	SP Winter Sport M3
	Michelin	Pilot Alpin
	Pirelli	Winter 210
205/55 R 16 94H	Dunlop	SP Winter Sport M3

35.29 Winter tyres for Passat from model year 1994 through model year 1997

Tyre size	Make	Tread pattern
185/65 R 14 86T	Continental	TS 760 Winter Contact
	Goodyear	Ultra Grip 4 +
	Michelin	XM + S 130
	Uniroyal	MS + 4
195/60 R 14 86T	Continental	TS 770 Winter Contact
	Goodyear	Ultra Grip 4 +
	Michelin	XM + S 130
205/50 R 15 86H	Michelin	TXM + S 330

35.30 Winter tyres for Passat from model year 1997 through model year 2006

Tyre size	Make	Tread pattern
195/65 R 15 91T	Continental	TS 790 Winter Contact
	Dunlop	SP Winter Sport M3
	Goodyear	Ultra Grip 6
	Michelin	Alpin
	Pirelli	Winter 190
195/65 R 15 91H	Continental	TS 790 Winter Contact
	Michelin	Pilot Alpin
	Nokian	NRW
	Vredestein	Wintrac
	Dunlop	SP Winter Sport M3
205/55 R 16 91H	Continental	TS 790 Winter Contact
	Dunlop	SP Winter Sport M3
	Michelin	Pilot Alpin
	Pirelli	Winter 210

Copyright by Volkswagen AG. Volkswagen AG does not guarantee or accept any liability with respect to the correctness of information in this document. Copying for private or commercial purposes, in part or in whole, is not permitted unless authorised by Volkswagen AG. Protected by copyright. Copying for private or commercial purposes, in part or in whole, is not permitted unless authorised by Volkswagen AG.
satelettronica

Tyre size	Make	Tread pattern
	Vredestein	Wintrac
205/55 R 16 94H	Dunlop	SP Winter Sport M3

35.31 Winter tyres for Passat W8

Tyre size	Make	Tread pattern
205/55 R 16 94H XL XL means „Extra Load“ Notes	Dunlop	SP Winter Sport M3
205/50 R 17 93H for Europe	Dunlop	SP Winter Sport M2
225/45 R 17 91H	Continental	TS 790 Winter Contact
	Dunlop	SP Winter Sport M3
	Michelin	Pilot Alpin
	Pirelli	Winter 210
225/45 R 17 91V	Continental	TS 790 Winter Contact
	Pirelli	Winter 240

35.32 Winter tyres for Passat Protect

Tyre size	Make	Tread pattern
205/55 R 16 94H XL XL means „Extra Load“ Notes	Dunlop	SP Winter Sport M3

35.33 Winter tyres for Passat from model year 2006

Tyre size	Make	Tread pattern
205/55 R 16 91H	Dunlop	SP Winter Sport M3
	Michelin	Pilot Alpin
	Pirelli	Winter 210
	Goodyear	Eagle UG GW3
235/45 R 17 94H	Dunlop	SP Winter Sport M3

35.34 Winter tyres for Phaeton from model year 2003

Tyre size	Make	Tread pattern
235/60 R 16 100H	Continental	TS 790 Winter Contact
	Dunlop	SP Winter Sport M2
	Dunlop	SP Winter Sport M3
	Michelin	Pilot Alpin
	Vredestein	Wintrac
	Goodyear	UG GW3
235/55 R 17 99H	Dunlop	SP Winter Sport M2
235/50 R 18 103H XL	Dunlop	SP Winter Sport M2

Protected by copyright. Copying for private or commercial purposes, in part or in whole, is not permitted unless authorised by Volkswagen AG. Volkswagen AG does not guarantee or accept any liability with respect to the correctness of information in this document. Copyright by Volkswagen AG.

satelettronica

Tyre size	Make	Tread pattern
XL means „Extra Load“ Notes		

35.35 Winter tyres for Sharan from model year 1996

Tyre size	Make	Tread pattern
195/65 R 15 95T	Continental	TS 770 Winter Contact
Only 16" tyres are permitted for vehicles from model year 2002		
195/60 R 16 C 99/97T	Dunlop	SP Winter Sport M2
215/55 R 16 97H	Dunlop	SP Winter Sport M3
215/55 R 16 95W	Dunlop	SP Winter Sport M3

35.36 Winter tyres for Touareg from model year 2003

Tyre size	Make	Tread pattern
235/70 R 16 106T	Continental	4x4 Winter Contact
235/65 R 17 108H XL	Dunlop	Grandtrek WT M2
	Continental	4x4 Winter Contact
235/60 R 18 107H XL	Dunlop	Grandtrek WT M2
255/50 R 19 107V XL XL means „Extra Load“ Notes	Pirelli	Scorpion Ice & Snow

Protected by copyright. Copyright for private or commercial purposes, in part or whole is not permitted unless authorised by Volkswagen AG. Volkswagen AG does not guarantee or accept any liability with respect to the correctness of information in this document. Copyright by Volkswagen AG.

satelettronica

36 Approved makes of off-road tyres for initial fitting

Protected by copyright. Copying for private or commercial purposes, in part or in whole, is not permitted unless authorised by Volkswagen AG. Volkswagen AG does not guarantee or accept any liability with respect to the correctness of information in this document. Copyright by Volkswagen AG.

36.1 Off-road tyres for Touareg from model year 2003

Tyre size	Make	Tread pattern
235/70 R 16 105T	Pirelli	Scorpion A/T
235/65 R 17 108T	Pirelli	Scorpion A/T
235/60 R 18 107T	Pirelli	Scorpion A/T

satelettronica